Eaton.com

xEnergy Basic

Wall-mounted and Floor-standing Switchboards for Low-voltage Sub-distribution up to 630 A

Product Catalog

Powering Business Worldwide

* At Eaton, we believe that power is a fundamental part of just about everything people do. That's why we're dedicated to helping our customers find new ways to manage electrical, hydraulic and mechanical power more efficiently, safely and sustainably. To improve people's lives, the communities where we live and work, and the planet our future generations depend upon. Because this is what really matters. And we're here to make sure it works.

To learn more go to: Eaton.com/whatmatters

Powering Business Worldwide

We make what matters work.

193170_LDO, 293313_LDO, 501316_LDO1

Distribution Boards

Distribution Boards

• **Chapter 0**

Table of Contents ..... Page 3

• **Chapter 1**

Field distribution boards protection class II ..... Page 4

1.1 Surface-mounted field distribution board EWK-G.., IP31 ..... Page 5

• **Chapter 2**

Enclosures / switchgear cabinets for installation system EP in protection class I and II ..... Page 10

2.1 Surface-mounted and floor-standing distribution board EMC2-H.../55-W, IP55 ..... Page 11

2.2 Surface-mounted distribution board BP-O-...-EP-W, IP31 ..... Page 20

2.3 Surface-mounted distribution board BPM-O-...-EP, IP55 ..... Page 26

2.4 Floor-standing distribution board BPM-F-...-EP, IP55 ..... Page 29

• **Chapter 3**

EP installation system - standard modules / mounting kits ..... Page 34

3.1 EP installation system - standard modules / Fitting-kits, Width 250 mm ..... Page 36

3.2 EP installation system - standard modules / Fitting-kits, Width 500 mm ..... Page 40

3.3 EP installation system - standard modules / Fitting-kits, Width 750 mm ..... Page 44

3.4 EP installation system - standard modules / Fitting-kits, Technical data ..... Page 46

• **Chapter 4**

EP installation system - general accessories ..... Page 53

• **Chapter 5**

Enclosures / switchgear cabinets for installation system ProfiSNAP ..... Page 66

5.1 Surface-mounted distribution board BP-O-..., IP30 (pre-assembled) ..... Page 67

5.2 Surface-mounted distribution board BP-O-..., IP30 (flat-pack, grey) ..... Page 72

5.3 Surface-mounted distribution board BP-O-..., IP30 (flat-pack, white) ..... Page 74

5.4 Surface-mounted distribution board BPM-O-..., IP55 ..... Page 95

5.5 Flush-mounted distribution board BP(A/M)-U-3S-..., IP30/IP43/IP54 ..... Page 105

5.6 Floor-standing distribution board BP-F-..., IP30 ..... Page 119

5.7 Outdoor distribution board BP-VF/DZ..., IP44 ..... Page 130

5.8 Floor-standing distribution board BPM-F-..., IP55 ..... Page 137

5.9 Shared compartments inside distribution boards BP(M)-O, BP(M)-F ..... Page 149

• **Chapter 6**

ProfiSNAP installation system - components for interior fitting ..... Page 154

6.1 Front plates, blind and with 45mm cut-out for DIN-rail devices ..... Page 156

6.2 Mounting kits for Moulded Case Circuit Breaker ..... Page 164

6.3 Mounting kits for Fuse Switch Disconnectors ..... Page 182

6.4 Mounting kits for BZM, Dumeco and QSA ..... Page 188

6.5 Mounting kits for Earthing and Neutral conductors ..... Page 189

6.6 Mounting plates for universal fixing of different components ..... Page 192

6.7 Mounting kits for Energy Meters and various metering equipment ..... Page 200

• **Chapter 7**

ProfiSNAP installation system - general accessories ..... Page 207

• **Chapter 8**

General accessories xEnergy Basic ..... Page 228

• **Chapter 9**

Overall technical data xEnergy Basic ..... Page 248

• **Chapter 10**

Verification of temperature rise by testing - selection of reference examples ..... Page 253

vt193163_ldo

vt193163_ldc

vt193169_ldo

vt193169_ldc

Width [mm]	Height [mm]	Interior frame size W x H [mm]	Number of rows	Total number of modular units [MU]	Type designation Cat. No.	Ready-to-use enclosures incl. pre-equipped mounting insert, DIN-rails and covers / prepared for F3A-flanges on top/bottom/door with swing handle (to be retrofitted with BPZ-SH-L-1P)
EWK-G../31, IP31, protection class II (protective insulated) - complete assembly						
300 (12MU/row)	500	250x450	3	36	**EWK-G13/31** 193157	incl. 1x PE- and 1x N-combination plug-type terminal 6x 1.5-16 mm² + 21x 0.75-4 mm²
	650	250x600	4	48	**EWK-G14/31** 193158	
	800	250x750	5	60	**EWK-G15/31** 193159	
	950	250x900	6	72	**EWK-G16/31** 193160	
550 (24MU/row)	500	500x450	3	72	**EWK-G23/31** 193161	incl. 2x PE- and 2x N-combination plug-type terminal 6x 1.5-16 mm² + 21x 0.75-4 mm²
	650	500x600	4	96	**EWK-G24/31** 193162	
	800	500x750	5	120	**EWK-G25/31** 193163	
	950	500x900	6	144	**EWK-G26/31** 193164	
800 (36MU/row)	500	750x450	3	108	**EWK-G33/31** 193165	incl. 3x PE- and 3x N-combination plug-type terminal 6x 1.5-16 mm² + 21x 0.75-4 mm²
	650	750x600	4	144	**EWK-G34/31** 193166	
	800	750x750	5	180	**EWK-G35/31** 193167	
	950	750x900	6	216	**EWK-G36/31** 193168	
1050 (48MU/row)	800	1000x750	5	240	**EWK-G45/31** 193169	incl. 4x PE- and 4x N-combination plug-type terminal 6x 1.5-16 mm² + 21x 0.75-4 mm²
	950	1000x900	6	288	**EWK-G46/31** 193170	

System overview

EWK-G../31

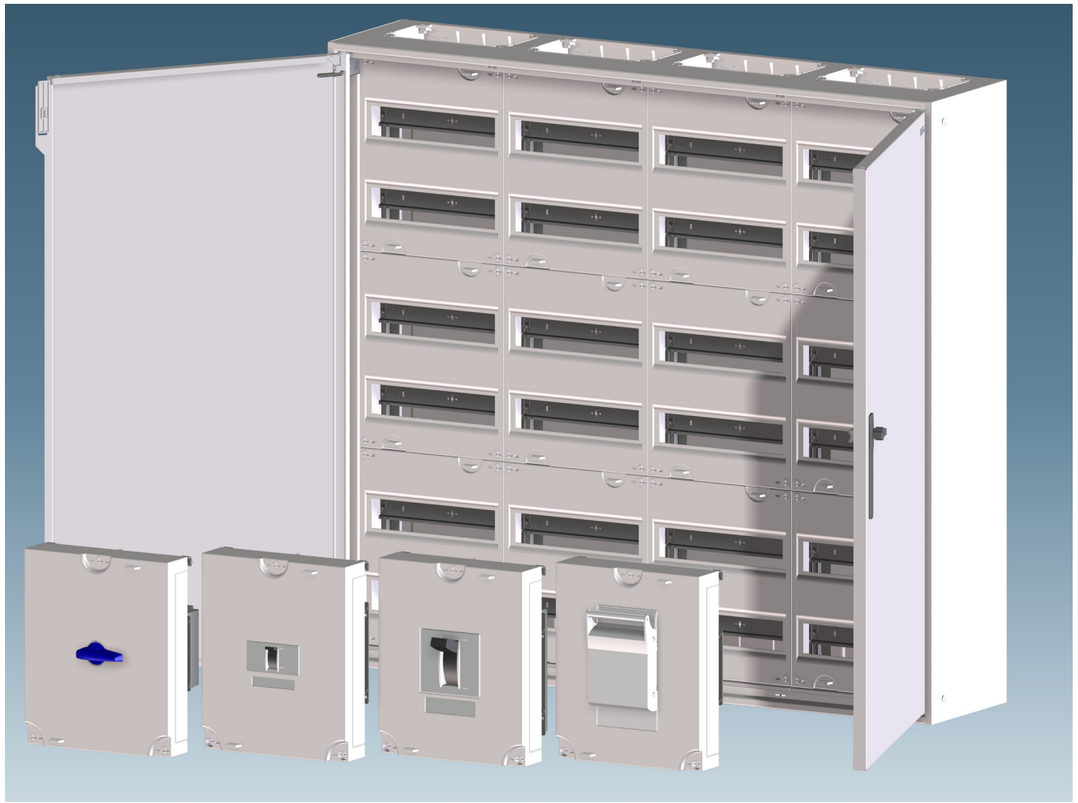

1. Ready-to-use enclosures incl. pre-equipped mounting insert, DIN-rails, N/PE-terminals and protective covers.
2. The flange apertures at the top/bottom are intended for F3A flanges and must be properly closed to ensure accordance with the IP31 degree of protection.
3. The enclosures can be mounted side by side and have been equipped with drilled holes and M8 thread inserts for this purpose (the add-on connection kit EMC2-AC55 can be ordered separately.)
4. Optionally, the standard turning lock can be replaced by a swing handler type BPZ-SH-L-1P (see general accessories).
5. The position of the mounting insert is perfectly matched to establish an efficient wiring from outside as well as internally from one section to the other.
6. The module widths of 300/550/800 mm have a single-door with single-point locking mechanism, while the 1050 mm version has two doors with a three-point locking mechanism; the left-hand door has to be locked first via a cam lock (top/bottom).
7. Special incomer kits for different devices (Dumeco, NZM or XNH up to 200 A) are possible to integrate in the top or bottom position of the enclosure.

	Frame size / Number of poles / Rated current [A]	Module height [mm] / Installation position	Type Designation	Cat. No.	Units per package
	EWK-…-KIT, mounting kits for MCCBs and (fuse) switch disconnectors				
193695_L	DMV160 3-/4-pole 125	300 Top / bottom	EWK-DMV160-KIT	195695	1
193696_L	NZM1 3-/4-pole 125	300 Top / bottom	EWK-NZM1-KIT	193696	1
193697_L	NZM2 3-/4-pole 200	300 Top / bottom	EWK-NZM2-KIT	193697	1
193698_L	XNH00 3-pole 125	300 Top / bottom	EWK-XNH00-KIT	193698	1

	Description	Type Designation	Cat. No.	Units per package
	Combined plug-type terminal IP2X			
wa_vt52713	Terminal support complete, N/PE, 1-level	ZSD-PKL/NPE/1	217220	10
	Terminal support complete, N/PE, 2-levels	ZSD-PKL/NPE/2	226157	10
	Terminal support complete, N/PE, 1-level, 4 potentials	ZSD-PKL/NPE/1/4X4	267011	10
	Terminal support complete, N/PE, 2-levels, screwless	ZSD-PKL/NPE/2/C	101977	10
	Plastic cover complete with 4 pcs. quick-release fasteners			
wa_vt02312	OA hood, 300 mm complete	ZSD-H300/OA/KLP	226578	1
	OA hood, 450 mm complete	ZSD-H450/OA/KLP	226756	1
	Rail 35 x 7.5 mm width 1 (250 mm long)			
vt20415	DIN rail for modular installation devices	ZSD-HTS	226549	1
	Quick lock for plastic cover			
wa_vt04012	Mounting spindle	ZSD-SPN	226543	1
	Cover plate holder / mounting tower for plastic cover			
wa_vt14902	Hood adapter	ZSD-AD/H	226544	1
	Mounting rail for wall mounting			
vt13805	Mounting rail completely, width 1	ZSD-MON/SN/B1	226596	1
	Mounting rail completely, width 2	ZSD-MON/SN/B2	226597	1
	Mounting rail completely, width 3	ZSD-MON/SN/B3	226598	1
	Mounting rail completely, width 4	ZSD-MON/SN/B4	226599	1

EWK Surface-mounted Field Distribution Boards, IP31

EWK

- Degree of protection IP31, impact resistance IK08
- Protection class II, totally insulated
- Surface-mounted, enclosure depth of around 230 mm
- Complete with door and distribution sections for DIN-modular devices
- Combined plug-type terminals for neutral and protective conductor are included
- Device cover with quick-acting closure
- Fully removable DIN-rail support rack
- Stable and torsion-resistant DIN-rails
- Large wiring area behind the DIN-rails
- Possibility of direct wall mounting
- Fast and easy inversion of the door hinges, 110° opening angle
- For bigger enclosures (width of 1050 mm), the distribution board comes with a 3-point lock
- The standard turning lock enables the use of a swing handler for different semi-cylinder locks
- Generous cable entry openings prepared for F3A-flanges at the top/bottom
- Enclosure acc.to IEC/EN 62208, dedicated to build assemblies in accordance with IEC/EN 61439-3 Max. rated current between 63 - 200 A, depending on main incomer, enclosure size and design-verified application

Technical Data

	EWK
Electrical	
Version according to	EN 62208
Degree of protection	IP31 acc.to EN 60529
Protection class	II, totally insulated acc.to DIN 43870
Rated voltage	400 V AC
Max. rated current	200 A
Mechanical	
Material	
Enclosure	Sheet steel, powder-coated with corrosion protection, inside lined with plastic (Polystyrole)
Door	Sheet steel, powder-coated with corrosion protection
Colour	
Enclosure	white RAL 9016
Door	non-transparent, white RAL 9016
Door opening angle	110°
Distance between rows	acc.to dimensional drawing
Support rail for devices	DIN rail 35 x 7.5 sheet steel, galvanised
Type of installation	Indoor
Prepared cable entry options	
EWK-G1…	1x F3A-flange cut-out top
	1x F3A-flange cut-out bottom
EWK-G2…	2x F3A-flange cut-out top
	2x F3A-flange cut-out bottom
EWK-G3…	3x F3A-flange cut-out top
	3x F3A-flange cut-out bottom
EWK-G4…	4x F3A-flange cut-out top
	4x F3A-flange cut-out bottom
Knock-outs in the plastic part per each 250 mm wide section	acc.to dimensional drawing (Detail 1)

Dimensions (mm)

EWK

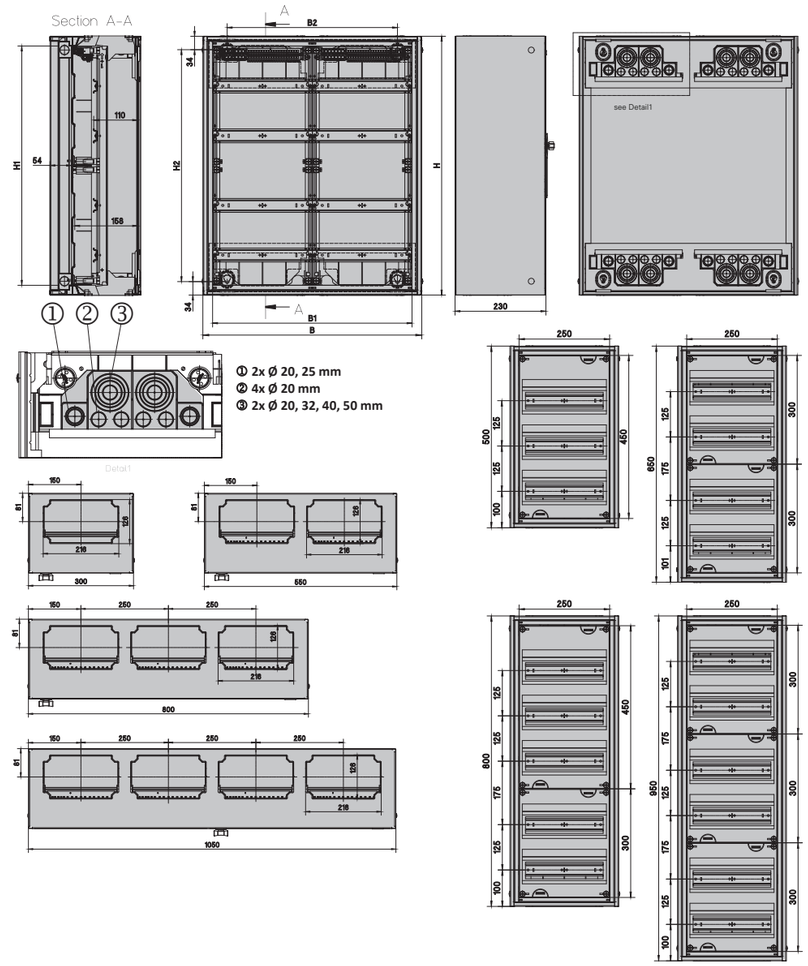

Type	Overall dimensions		Internal dimensions (front plate)		Wall mounting (Enclosure directly)		Pv [W] (ΔT 20K)	Pv [W] (ΔT 35K)
	B	H	B1	H1	B2	H2		
EWK-G13/31	300	500	250	450	178	434	33	65
EWK-G14/31		650		600		584	40	80
EWK-G15/31		800		750		734	47	94
EWK-G16/31		950		900		884	54	107
EWK-G23/31	550	500	500	450	428	434	48	96
EWK-G24/31		650		600		584	58	116
EWK-G25/31		800		750		734	68	136
EWK-G26/31		950		900		884	75	150
EWK-G33/31	800	500	750	450	678	434	63	126
EWK-G34/31		650		600		584	66	132
EWK-G35/31		800		750		734	80	160
EWK-G36/31		950		900		884	97	195
EWK-G45/31	1050	800	1000	750	928	734	101	202
EWK-G46/31		950		900		884	133	266

193170_LDO, 293313_LDO, 501316_LDO1

Distribution Boards

Distribution Boards

• Chapter 0
Table of Contents ..... Page 3

• Chapter 1
Field distribution boards protection class II ..... Page 4
1.1 Surface-mounted field distribution board EWK-G.., IP31 ..... Page 5

• Chapter 2
Enclosures / switchgear cabinets for installation system EP in protection class I and II ..... Page 10
2.1 Surface-mounted and floor-standing distribution board EMC2-H.../55-W, IP55 ..... Page 11
2.2 Surface-mounted distribution board BP-0-...-EP-W, IP31 ..... Page 20
2.3 Surface-mounted distribution board BPM-0-...-EP, IP55 ..... Page 26
2.4 Floor-standing distribution board BPM-F-...-EP, IP55 ..... Page 29

• Chapter 3
EP installation system - standard modules / mounting kits ..... Page 34
3.1 EP installation system - standard modules / Fitting-kits, Width 250 mm ..... Page 36
3.2 EP installation system - standard modules / Fitting-kits, Width 500 mm ..... Page 40
3.3 EP installation system - standard modules / Fitting-kits, Width 750 mm ..... Page 44
3.4 EP installation system - standard modules / Fitting-kits, Technical data ..... Page 46

• Chapter 4
EP installation system - general accessories ..... Page 53

• Chapter 5
Enclosures / switchgear cabinets for installation system ProfiSNAP ..... Page 66
5.1 Surface-mounted distribution board BP-0-..., IP30 (pre-assembled) ..... Page 67
5.2 Surface-mounted distribution board BP-0-..., IP30 (flat-pack, grey) ..... Page 72
5.3 Surface-mounted distribution board BP-0-..., IP30 (flat-pack, white) ..... Page 74
5.4 Surface-mounted distribution board BPM-0-..., IP55 ..... Page 95
5.5 Flush-mounted distribution board BP(A/M)-U-3S-..., IP30/IP43/IP54 ..... Page 105
5.6 Floor-standing distribution board BP-F-..., IP30 ..... Page 119
5.7 Outdoor distribution board BP-VF/DZ..., IP44 ..... Page 130
5.8 Floor-standing distribution board BPM-F-..., IP55 ..... Page 137
5.9 Shared compartments inside distribution boards BP(M)-O, BP(M)-F ..... Page 149

• Chapter 6
ProfiSNAP installation system - components for interior fitting ..... Page 154
6.1 Front plates, blind and with 45mm cut-out for DIN-rail devices ..... Page 156
6.2 Mounting kits for Moulded Case Circuit Breaker ..... Page 164
6.3 Mounting kits for Fuse Switch Disconnectors ..... Page 182
6.4 Mounting kits for BZM, Dumeco and QSA ..... Page 188
6.5 Mounting kits for Earthing and Neutral conductors ..... Page 189
6.6 Mounting plates for universal fixing of different components ..... Page 192
6.7 Mounting kits for Energy Meters and various metering equipment ..... Page 200

• Chapter 7
ProfiSNAP installation system - general accessories ..... Page 207

• Chapter 8
General accessories xEnergy Basic ..... Page 228

• Chapter 9
Overall technical data xEnergy Basic ..... Page 248

• Chapter 10
Verification of temperature rise by testing - selection of reference examples ..... Page 253

System Overview

EMC2-H../55-W, IP55

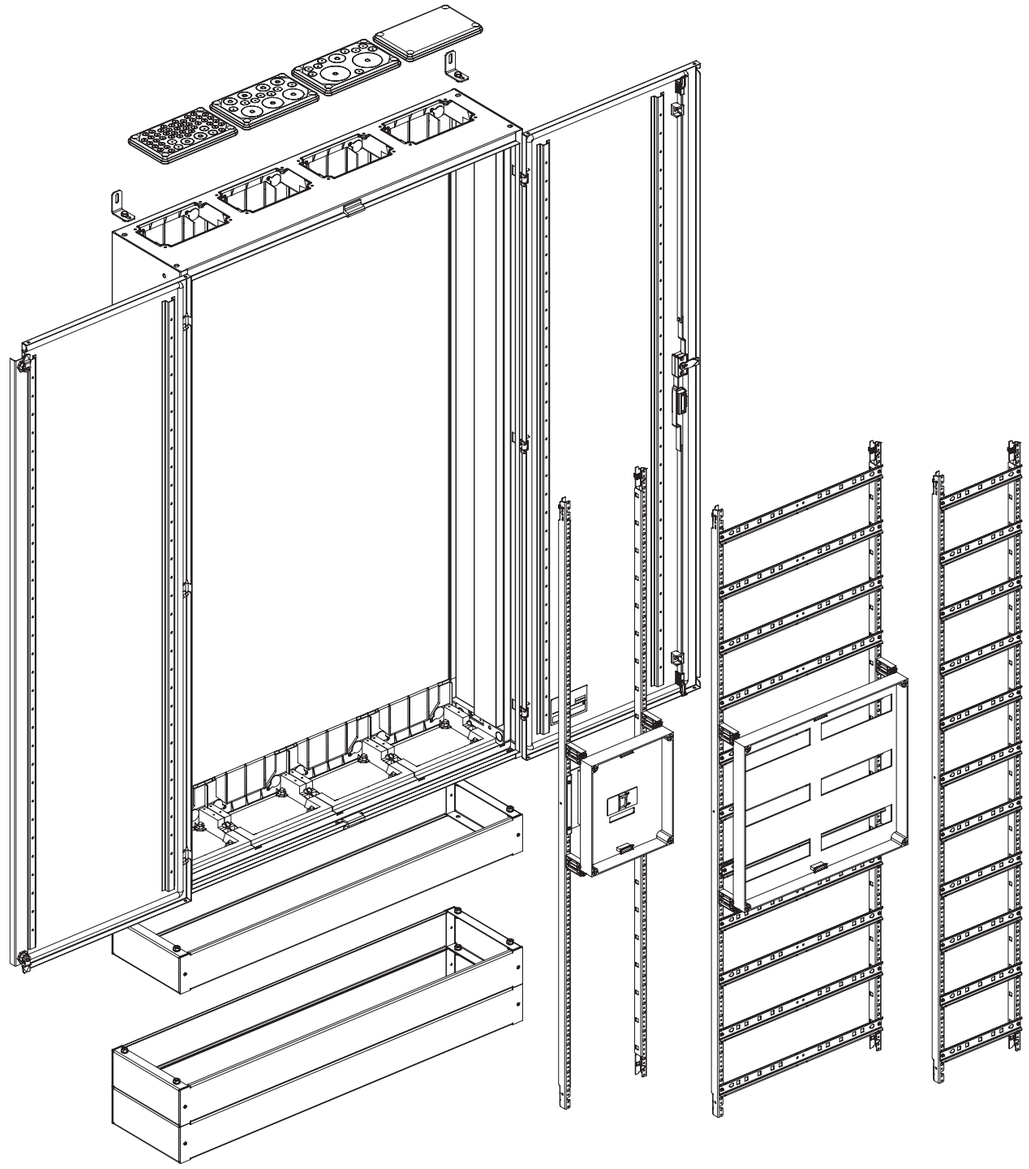

xEnergy Distribution Boards

Surface-mounted and fl oor-standing distribution board EMC2-H.../55-W, IP55

xEnergy Basic
Sheet 1/4

501320_LDC

501320_LDO

501321_LDO

501339_L | 501342_L

Width [mm]	Height [mm]	EP frame size W x H [mm]	Pre-assembled configuration dedicated for the use with EP system prepared for F3A-flanges on top/bottom door with swing handle BPZ-SH-L (3-point locking mechanism) Single-wing door design	Pre-assembled configuration dedicated for the use with EP system prepared for F3A-flanges on top/bottom door with swing handle BPZ-SH-L (3-point locking mechanism) Double-wing door design	Plinth 100 mm Side parts 1 pair / Front cover 1 pc.
			RAL 9016 white Empty	RAL 9016 white Empty	RAL 9016 white
			Cat. No. per unit unit = 1 pc.	Cat. No. per unit unit = 1 pc.	Cat. No. per unit unit = 1 pc.
300 (12MU/row)	800	250x750	**EMC2-H15/55-W** EP-501300	-	**EMC2-SS-1/250-W** EP-501339 **EMC2-FS-300/1-W** EP-501340
	950	250x900	**EMC2-H16/55-W** EP-501304	-	
	1100	250x1050	**EMC2-H17/55-W** EP-501309	-	
	1250	250x1200	**EMC2-H18/55-W** EP-501314	-	
	1400	250x1350	**EMC2-H19/55-W** EP-501319	-	
	1550	250x1500	**EMC2-H110/55-W** EP-501324	-	
	1700	250x1650	**EMC2-H111/55-W** EP-501329	-	
	1850	250x1800	**EMC2-H112/55-W** EP-501334	-	
550 (24MU/row)	800	500x750	**EMC2-H25/55-W** EP-501301	-	**EMC2-SS-1/250-W** EP-501339 **EMC2-FS-550/1-W** EP-501341
	950	500x900	**EMC2-H26/55-W** EP-501305	-	
	1100	500x1050	**EMC2-H27/55-W** EP-501310	-	
	1250	500x1200	**EMC2-H28/55-W** EP-501315	-	
	1400	500x1350	**EMC2-H29/55-W** EP-501320	-	
	1550	500x1500	**EMC2-H210/55-W** EP-501325	-	
	1700	500x1650	**EMC2-H211/55-W** EP-501330	-	
	1850	500x1800	**EMC2-H212/55-W** EP-501335	-	
800 (36MU/row)	800	750x750	-	**EMC2-H35/55-W** EP-501302	**EMC2-SS-1/250-W** EP-501339 **EMC2-FS-800/1-W** EP-501342
	950	750x900	-	**EMC2-H36/55-W** EP-501306	
	1100	750x1050	-	**EMC2-H37/55-W** EP-501311	
	1250	750x1200	-	**EMC2-H38/55-W** EP-501316	
	1400	750x1350	-	**EMC2-H39/55-W** EP-501321	

xEnergy Basic
Sheet 2/4

xEnergy Distribution Boards

Surface-mounted and fl oor-standing distribution board EMC2-H.../55-W, IP55

501339_L | 501342_L

501363_L

501371_L

501379_L

501347_L

Width [mm]	Height [mm]	EP frame size W x H [mm]	Plinth 200 mm Side parts 1 pair / Front cover 1 pc.	Support profile vertical to accommodate EP inside EMC2 1 pair consists of left/right part used for 250 mm compartment	Pre-assembled mounting insert used for 250 mm compartment consists of 1 pair of EPTV and various number of EPTS7 (fully assembled)	Pre-assembled mounting insert used for 500 mm compartment consists of 1 pair of EPTV and various number of EPTS7 (fully assembled)	Rear cover plates used for top/bottom installation to close back-side cable entry 1 pair consists of two parts
			RAL 9016 white				
			Cat. No. per unit unit = 1 pc.	Cat. No. per unit unit = 1 pc.	Cat. No. per unit unit = 1 pc.	Cat. No. per unit unit = 1 pc.	Cat. No. per unit unit = 1 pc.
300 (12MU/row)	800	250x750	**EMC2-SS-1/250-W** EP-501339 (2x) **EMC2-FS-300/1-W** EP-501340 (2x)	**EPTV750-EMC2** EP-501360	**EPTV15/TS7-EMC2** EP-501368	**EPTV25/TS7-EMC2** EP-501376	**EMC2-RCP-300-TB** EP-501345
	950	250x900		**EPTV900-EMC2** EP-501361	**EPTV16/TS7-EMC2** EP-501369	**EPTV26/TS7-EMC2** EP-501377	
	1100	250x1050		**EPTV1050-EMC2** EP-501362	**EPTV17/TS7-EMC2** EP-501370	**EPTV27/TS7-EMC2** EP-501378	
	1250	250x1200		**EPTV1200-EMC2** EP-501363	**EPTV18/TS7-EMC2** EP-501371	**EPTV28/TS7-EMC2** EP-501379	
	1400	250x1350		**EPTV1350-EMC2** EP-501364	**EPTV19/TS7-EMC2** EP-501372	**EPTV29/TS7-EMC2** EP-501380	
	1550	250x1500		**EPTV1500-EMC2** EP-501365	**EPTV110/TS7-EMC2** EP-501373	**EPTV210/TS7-EMC2** EP-501381	
	1700	250x1650		**EPTV1650-EMC2** EP-501366	**EPTV111/TS7-EMC2** EP-501374	**EPTV211/TS7-EMC2** EP-501382	
	1850	250x1800		**EPTV1800-EMC2** EP-501367	**EPTV112/TS7-EMC2** EP-501375	**EPTV212/TS7-EMC2** EP-501383	
550 (24MU/row)	800	500x750	**EMC2-SS-1/250-W** EP-501339 (2x) **EMC2-FS-550/1-W** EP-501341 (2x)	**EPTV750-EMC2** EP-501360	**EPTV15/TS7-EMC2** EP-501368	**EPTV25/TS7-EMC2** EP-501376	**EMC2-RCP-550-TB** EP-501346
	950	500x900		**EPTV900-EMC2** EP-501361	**EPTV16/TS7-EMC2** EP-501369	**EPTV26/TS7-EMC2** EP-501377	
	1100	500x1050		**EPTV1050-EMC2** EP-501362	**EPTV17/TS7-EMC2** EP-501370	**EPTV27/TS7-EMC2** EP-501378	
	1250	500x1200		**EPTV1200-EMC2** EP-501363	**EPTV18/TS7-EMC2** EP-501371	**EPTV28/TS7-EMC2** EP-501379	
	1400	500x1350		**EPTV1350-EMC2** EP-501364	**EPTV19/TS7-EMC2** EP-501372	**EPTV29/TS7-EMC2** EP-501380	
	1550	500x1500		**EPTV1500-EMC2** EP-501365	**EPTV110/TS7-EMC2** EP-501373	**EPTV210/TS7-EMC2** EP-501381	
	1700	500x1650		**EPTV1650-EMC2** EP-501366	**EPTV111/TS7-EMC2** EP-501374	**EPTV211/TS7-EMC2** EP-501382	
	1850	500x1800		**EPTV1800-EMC2** EP-501367	**EPTV112/TS7-EMC2** EP-501375	**EPTV212/TS7-EMC2** EP-501383	
800 (36MU/row)	800	750x750	**EMC2-SS-1/250-W** EP-501339 (2x) **EMC2-FS-800/1-W** EP-501342 (2x)	**EPTV750-EMC2** EP-501360	**EPTV15/TS7-EMC2** EP-501368	**EPTV25/TS7-EMC2** EP-501376	**EMC2-RCP-800-TB** EP-501347
	950	750x900		**EPTV900-EMC2** EP-501361	**EPTV16/TS7-EMC2** EP-501369	**EPTV26/TS7-EMC2** EP-501377	
	1100	750x1050		**EPTV1050-EMC2** EP-501362	**EPTV17/TS7-EMC2** EP-501370	**EPTV27/TS7-EMC2** EP-501378	
	1250	750x1200		**EPTV1200-EMC2** EP-501363	**EPTV18/TS7-EMC2** EP-501371	**EPTV28/TS7-EMC2** EP-501379	
	1400	750x1350		**EPTV1350-EMC2** EP-501364	**EPTV19/TS7-EMC2** EP-501372	**EPTV29/TS7-EMC2** EP-501380	

xEnergy Distribution Boards

Surface-mounted and fl oor-standing distribution board EMC2-H.../55-W, IP55

xEnergy Basic
Sheet 3/4

501335_LDC

501335_LDO

501338_LDO

501339_L | 501342_L

Width [mm]	Height [mm]	EP frame size W x H [mm]	Pre-assembled configuration dedicated for the use with EP system prepared for F3A-flanges on top/bottom door with swing handle BPZ-SH-L (3-point locking mechanism) Single-wing door design	Pre-assembled configuration dedicated for the use with EP system prepared for F3A-flanges on top/bottom door with swing handle BPZ-SH-L (3-point locking mechanism) Double-wing door design	Plinth 100 mm Side parts 1 pair / Front cover 1 pc.
			RAL 9016 white Empty	RAL 9016 white Empty	RAL 9016 white
			Cat. No. per unit unit = 1 pc.	Cat. No. per unit unit = 1 pc.	Cat. No. per unit unit = 1 pc.
800 (36MU/row)	1550	750x1500	-	**EMC2-H310/55-W** EP-501326	**EMC2-SS-1/250-W** EP-501339 **EMC2-FS-800/1-W** EP-501342
	1700	750x1650	-	**EMC2-H311/55-W** EP-501331	
	1850	750x1800	-	**EMC2-H312/55-W** EP-501336	
1050 (48MU/row)	800	1000x750	-	**EMC2-H45/55-W** EP-501303	**EMC2-SS-1/250-W** EP-501339 **EMC2-FS-1050/1-W** EP-501343
	950	1000x900	-	**EMC2-H46/55-W** EP-501307	
	1100	1000x1050	-	**EMC2-H47/55-W** EP-501312	
	1250	1000x1200	-	**EMC2-H48/55-W** EP-501317	
	1400	1000x1350	-	**EMC2-H49/55-W** EP-501322	
	1550	1000x1500	-	**EMC2-H410/55-W** EP-501327	
	1700	1000x1650	-	**EMC2-H411/55-W** EP-501332	
	1850	1000x1800	-	**EMC2-H412/55-W** EP-501337	
1300 (60MU/row)	800	1250x750	-	-	**EMC2-SS-1/250-W** EP-501339 **EMC2-FS-1300/1-W** EP-501344
	950	1250x900	-	**EMC2-H56/55-W** EP-501308	
	1100	1250x1050	-	**EMC2-H57/55-W** EP-501313	
	1250	1250x1200	-	**EMC2-H58/55-W** EP-501318	
	1400	1250x1350	-	**EMC2-H59/55-W** EP-501323	
	1550	1250x1500	-	**EMC2-H510/55-W** EP-501328	
	1700	1250x1650	-	**EMC2-H511/55-W** EP-501333	
	1850	1250x1800	-	**EMC2-H512/55-W** EP-501338	

xEnergy Distribution Boards

Surface-mounted and fl oor-standing distribution board EMC2-H.../55-W, IP55

2.1

501339_L | 501342_L

501363_L

501371_L

501379_L

501347_L

Plinth 200 mm Side parts 1 pair / Front cover 1 pc.	Support profile vertical to accommodate EP inside EMC2 1 pair consists of left/right part used for 250 mm compartment	Pre-assembled mounting insert used for 250 mm compartment consists of 1 pair of EPTV and various number of EPTS7 (fully assembled)	Pre-assembled mounting insert used for 500 mm compartment consists of 1 pair of EPTV and various number of EPTS7 (fully assembled)	Rear cover plates used for top/bottom installation to close back-side cable entry 1 pair consists of two parts
RAL 9016 white				
Cat. No. per unit unit = 1 pc.	Cat. No. per unit unit = 1 pc.	Cat. No. per unit unit = 1 pc.	Cat. No. per unit unit = 1 pc.	Cat. No. per unit unit = 1 pc.
EMC2-SS-1/250-W EP-501339 (2x) **EMC2-FS-800/1-W** EP-501342 (2x)	**EPTV1500-EMC2** EP-501365	**EPTV110/TS7-EMC2** EP-501373	**EPTV210/TS7-EMC2** EP-501381	**EMC2-RCP-800-TB** EP-501347
	EPTV1650-EMC2 EP-501366	**EPTV111/TS7-EMC2** EP-501374	**EPTV211/TS7-EMC2** EP-501382	
	EPTV1800-EMC2 EP-501367	**EPTV112/TS7-EMC2** EP-501375	**EPTV212/TS7-EMC2** EP-501383	
EMC2-SS-1/250-W EP-501339 (2x) **EMC2-FS-1050/1-W** EP-501343 (2x)	**EPTV750-EMC2** EP-501360	**EPTV15/TS7-EMC2** EP-501368	**EPTV25/TS7-EMC2** EP-501376	**EMC2-RCP-1050-TB** EP-501348
	EPTV900-EMC2 EP-501361	**EPTV16/TS7-EMC2** EP-501369	**EPTV26/TS7-EMC2** EP-501377	
	EPTV1050-EMC2 EP-501362	**EPTV17/TS7-EMC2** EP-501370	**EPTV27/TS7-EMC2** EP-501378	
	EPTV1200-EMC2 EP-501363	**EPTV18/TS7-EMC2** EP-501371	**EPTV28/TS7-EMC2** EP-501379	
	EPTV1350-EMC2 EP-501364	**EPTV19/TS7-EMC2** EP-501372	**EPTV29/TS7-EMC2** EP-501380	
	EPTV1500-EMC2 EP-501365	**EPTV110/TS7-EMC2** EP-501373	**EPTV210/TS7-EMC2** EP-501381	
	EPTV1650-EMC2 EP-501366	**EPTV111/TS7-EMC2** EP-501374	**EPTV211/TS7-EMC2** EP-501382	
	EPTV1800-EMC2 EP-501367	**EPTV112/TS7-EMC2** EP-501375	**EPTV212/TS7-EMC2** EP-501383	
EMC2-SS-1/250-W EP-501339 (2x) **EMC2-FS-1300/1-W** EP-501344 (2x)	**EPTV750-EMC2** EP-501360	**EPTV15/TS7-EMC2** EP-501368	**EPTV25/TS7-EMC2** EP-501376	**EMC2-RCP-1300-TB** EP-501349
	EPTV900-EMC2 EP-501361	**EPTV16/TS7-EMC2** EP-501369	**EPTV26/TS7-EMC2** EP-501377	
	EPTV1050-EMC2 EP-501362	**EPTV17/TS7-EMC2** EP-501370	**EPTV27/TS7-EMC2** EP-501378	
	EPTV1200-EMC2 EP-501363	**EPTV18/TS7-EMC2** EP-501371	**EPTV28/TS7-EMC2** EP-501379	
	EPTV1350-EMC2 EP-501364	**EPTV19/TS7-EMC2** EP-501372	**EPTV29/TS7-EMC2** EP-501380	
	EPTV1500-EMC2 EP-501365	**EPTV110/TS7-EMC2** EP-501373	**EPTV210/TS7-EMC2** EP-501381	
	EPTV1650-EMC2 EP-501366	**EPTV111/TS7-EMC2** EP-501374	**EPTV211/TS7-EMC2** EP-501382	
	EPTV1800-EMC2 EP-501367	**EPTV112/TS7-EMC2** EP-501375	**EPTV212/TS7-EMC2** EP-501383	

Description	Type Designation	Cat. No.	Units per package

Wall fixing bracket set for EMC2 series

- For all kind of floor-standing cabinets to fix them towards the wall against toggling
- One set includes 2 wall fixing brackets plus mounting accessories
- Especially for EMC2 these brackets can be used for external wall-mounting as well (2 sets required)

vt28610

1 set = 2 brackets (top fixing for floor-standing cabinets)	BPZ-WW	142474	1
2 sets = 4 brackets (external mounting for wall-enclosures)	BPZ-WW	142474	1

Add-on connection kit EMC2

- For a proper arrangement (side-by-side) of two or more cabinets taking into account of the degree of protection
- Set consists of screws, washers and gasket
- 1 set is needed for each lateral connection

vt05118

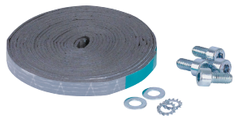

Depth of 270 mm / various heights	EMC2-AC55	EP-501356	1

Spare part hinge (180°) for EMC2

- Replacement for all type of EMC2 variants considering all single- and double-wing door design
- Each door is equipped with 3 hinges, visible from outside, 180° design, black colored
- 1 metal hinge consists of two parts incl. hinge pin

501358_L

Spare part hinge	EMC2-MH	EP-501358	1

SNAP fastener for support profile vertical as spare part

- SNAP fastener for fixing of support profiles / mounting insert inside EWK and EMC2 enclosure series
- The fastener enables tool-less actuation when inserting the profiles to the enclosure
- Operation by Phillips H2, releasing by a 1/4 turn of the screw

501359_L

SNAP fastener	EMC2-SNAP095	EP-501359 *)	10

*) Cat. No. and price per piece

System overview

EMC2-H../55-W

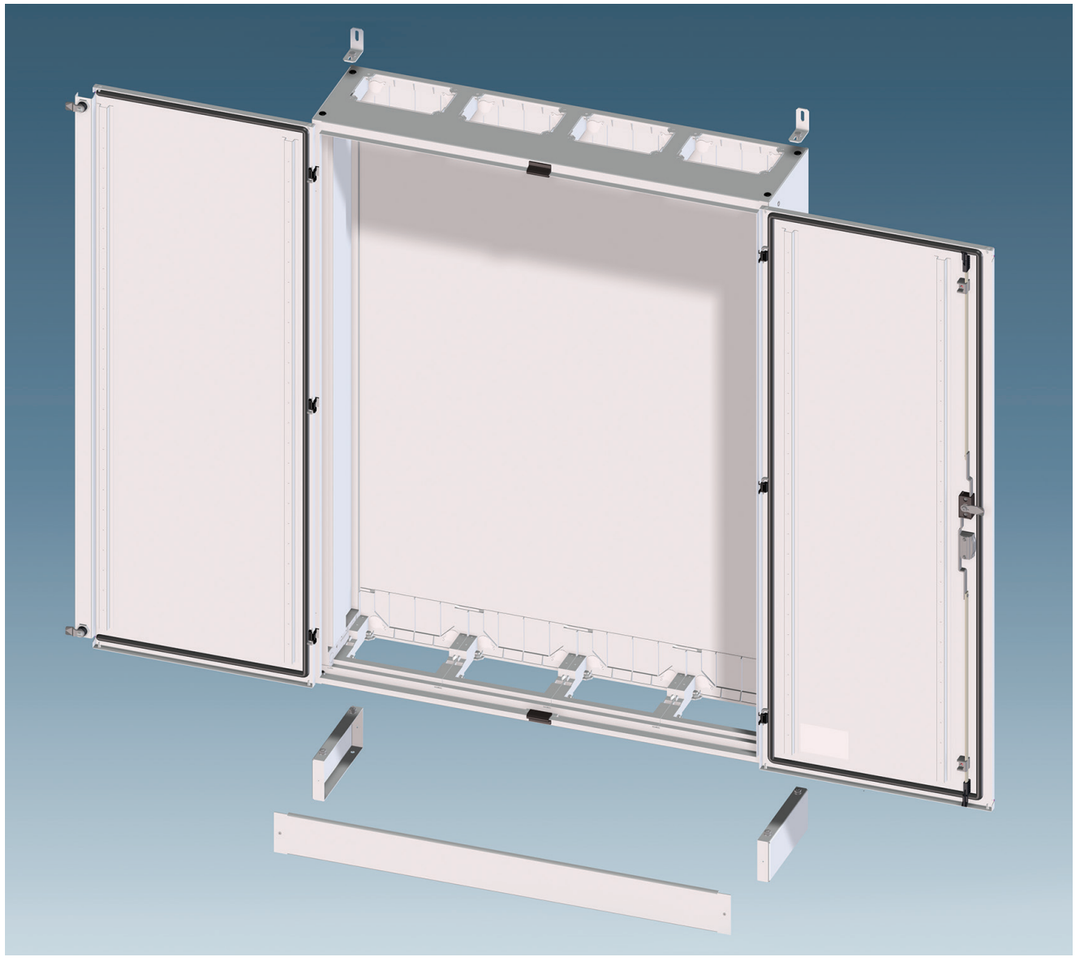

1. The new series is fully compatible with Eaton's existing EP system components; it boasts a new interior frame design
2. The insert can be placed at the bottom of the distribution board and secured in place at the top by means of novel snap fasteners.
3. The new design has made it possible to decrease the external footprint of the enclosure, effectively reducing the height and width by 50 mm, without compromising on the space available inside.
4. Thanks to perfectly designed internal cladding, the enclosure is compliant with IEC protection class II requirement
5. External doors with a swing of 180 degrees incl. three-point locking mechanism and swing handle by standard
6. With the new external door, there is no gap between door and enclosure, for an improved overall appearance.
7. The EMC2 enclosures are equipped with large flange openings at the top and bottom that match Eaton's comprehensive portfolio of F3A flanges
8. The enclosure depth of 270 mm has been carefully chosen to match both the available flange openings and the EP assembly system to further simplify the wiring work
9. All EMC2 models are rated IP55 overall, and IP2XC with open doors and closed protection covers to provide for enhanced personnel protection.
10. Eaton also offers plinths with a height of 100 mm, which can be combined or used individually, and additional cable-entry knockouts are available at the rear.
11. All versions can be wall-mounted or used as floor-standing enclosures. Special provisions in the side panels ensure that the enclosures can be quickly and easily bayed, without any adverse impact on the protective insulation

Description

EMC2-H.../55-W

- Complete cabinets, dedicated to the use of EP mounting units
- "Space-optimized design" enables slimmer outer dimensions with the same inner dimensions
- Degree of protection IP55
- Impact resistance IK10
- Protection class II (protective insulation)
- Cable entry prepared for F3A flanges, top/bottom
- Quick and easy change of the hinge direction, door opening angle 180°
- Three-point locking mechanism with swing handler
- Direct wall mounting possible, wall-fixing brackets optionally included in the accessories
- Enclosure made from powder-coated sheet steel with interior plastic cladding, RAL 9016 (traffic white)
- Lateral mounting points ensure that several enclosures can be mounted side by side
- The entire assortment is ready to use for surface-mounted as well as floor-standing installation (optionally with plinth)

Technical data

	EMC2-H.../55-W
Electrical	
Type conforms to	IEC/EN 62208
Protection class	II (protective insulation)
Degree of protection	IP55 (closed version with door/flanges) IP2XC (open door, the installation level is properly protected with EP covers)
Impact resistance	IK10
Rated operational voltage	415 VAC / 50 Hz
Rated current	Max. 630 A (depending on the type of incoming circuit breaker or the busbar system being used)

The permissible temperature increases for switchgear assemblies with a rated current of up to 630 A can be evaluated in accordance with section 10.10.4.2 of IEC/EN 61439-1.
For the maximum permissible heat dissipation for all devices inside the distribution board at an ambient temperature of 35° C and ΔT of 20 K / 35 K at an enclosure height of 75 %, please refer to the table on enclosure dimensions; (calculation method acc.to IEC/TR 60890).

Mechanical	
Enclosure	Excellent stability thanks to the welded construction Max. permissible load of the enclosure according to IEC/EN 62208: 200 kg
Material	Sheet steel, phosphated and polyester powder coated (untextured surface) with corrosion protection
Colour	Traffic white, RAL 9016
Door	With continuous foamed gasket, hinges on the outside (visible), door opening angle 180° Max. permissible load of the door(s) according to IEC/EN 62208: 10 kg
Type	Flexible interior fittings with EP mounting units on system support frame dedicated set of vertical profiles (EPTV...-EMC2) per 250 mm wide compartment has to be ordered separately pre-assembled mounting inserts incl. DIN-rails are available as standard catalogue items
Locking mechanism	Three-point locking mechanism with swing handler, lock cylinder optionally included in the accessories
Cable entry	Open, prepared for the insertion of two standard F3A flanges for each 250 mm wide module (top/bottom)
Ambient conditions	Indoor installation (wall mounting) Max. ambient temperature +40° C Min. ambient temperature -5° C
Halogen-free, RoHS	< 1%, ja
Accessories	Wall-fixing brackets for wall mounting, a 100 mm base if used as a floor-standing cabinet, lock cylinders as inserts for swing handlers, various F3A flanges for cable entry, add-on connection kit
Delivered as	Complete cabinets (pre-mounted), dedicated to the use of EP mounting units (without EPTV...-EMC2)

Dimensions (mm)

EMC2

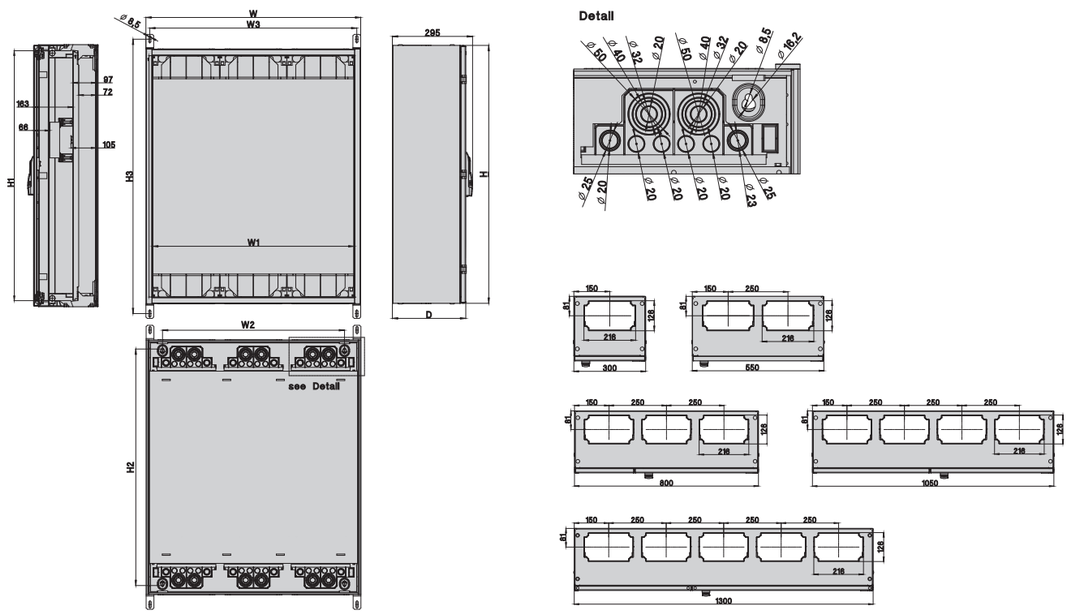

Type	Overall dimensions			Internal dimensions (front plate)		Wall mounting (Enclosure directly)		Wall mounting (via fixing bracket set)		Thermal dissipation of the enclosure acc. to IEC/TR 60890	
	W	H	D	W1	H1	W2	H2	W3	H3	Pv [W] (ΔT 20K)	Pv [W] (ΔT 35K)
EMC2-H15/55-W	300	800	270	250	750	178	734	271	875	47	95
EMC2-H16/55-W		950			900		884		1025	54	108
EMC2-H17/55-W		1100			1050		1034		1175	60	121
EMC2-H18/55-W		1250			1200		1184		1325	67	134
EMC2-H19/55-W		1400			1350		1334		1475	71	142
EMC2-H110/55-W		1550			1500		1484		1625	75	150
EMC2-H111/55-W		1700			1650		1634		1775	79	159
EMC2-H112/55-W		1850			1800		1784		1925	83	167
EMC2-H25/55-W	550	800	270	500	750	428	734	521	875	68	136
EMC2-H26/55-W		950			900		884		1025	72	144
EMC2-H27/55-W		1100			1050		1034		1175	76	152
EMC2-H28/55-W		1250			1200		1184		1325	80	160
EMC2-H29/55-W		1400			1350		1334		1475	89	179
EMC2-H210/55-W		1550			1500		1484		1625	98	197
EMC2-H211/55-W		1700			1650		1634		1775	107	215
EMC2-H212/55-W		1850			1800		1784		1925	118	236
EMC2-H35/55-W	800	800	270	750	750	678	734	771	875	82	165
EMC2-H36/55-W		950			900		884		1025	95	190
EMC2-H37/55-W		1100			1050		1034		1175	108	217
EMC2-H38/55-W		1250			1200		1184		1325	120	241
EMC2-H39/55-W		1400			1350		1334		1475	133	267
EMC2-H310/55-W		1550			1500		1484		1625	147	295
EMC2-H311/55-W		1700			1650		1634		1775	160	321
EMC2-H312/55-W		1850			1800		1784		1925	170	341
EMC2-H45/55-W	1050	800	270	1000	750	928	734	1021	875	112	224
EMC2-H46/55-W		950			900		884		1025	130	260
EMC2-H47/55-W		1100			1050		1034		1175	147	295
EMC2-H48/55-W		1250			1200		1184		1325	167	334
EMC2-H49/55-W		1400			1350		1334		1475	184	368
EMC2-H410/55-W		1550			1500		1484		1625	194	388
EMC2-H411/55-W		1700			1650		1634		1775	203	407
EMC2-H412/55-W		1850			1800		1784		1925	211	423
EMC2-H56/55-W	1300	950	270	1250	900	1178	884	1271	1025	167	335
EMC2-H57/55-W		1100			1050		1034		1175	192	385
EMC2-H58/55-W		1250			1200		1184		1325	208	417
EMC2-H59/55-W		1400			1350		1334		1475	221	442
EMC2-H510/55-W		1550			1500		1484		1625	232	464
EMC2-H511/55-W		1700			1650		1634		1775	242	484
EMC2-H512/55-W		1850			1800		1784		1925	251	504

System Overview

BP-O-…-EP-W, IP31

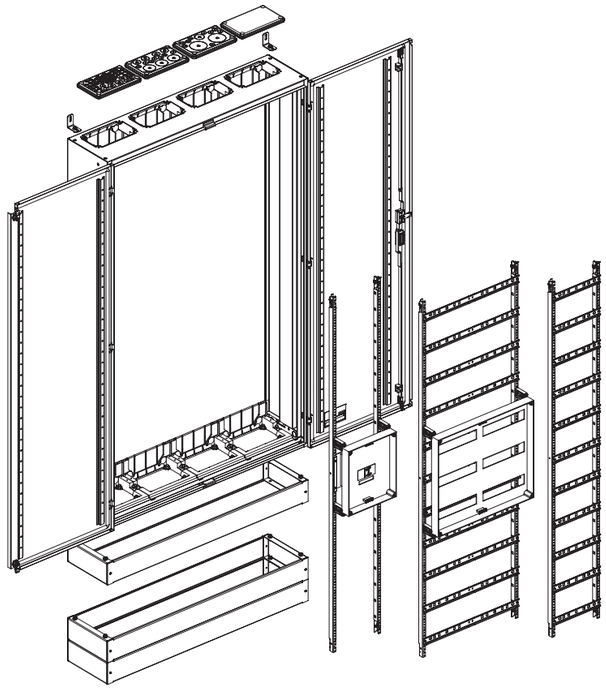

BPM-O-…-EP(-W), IP55

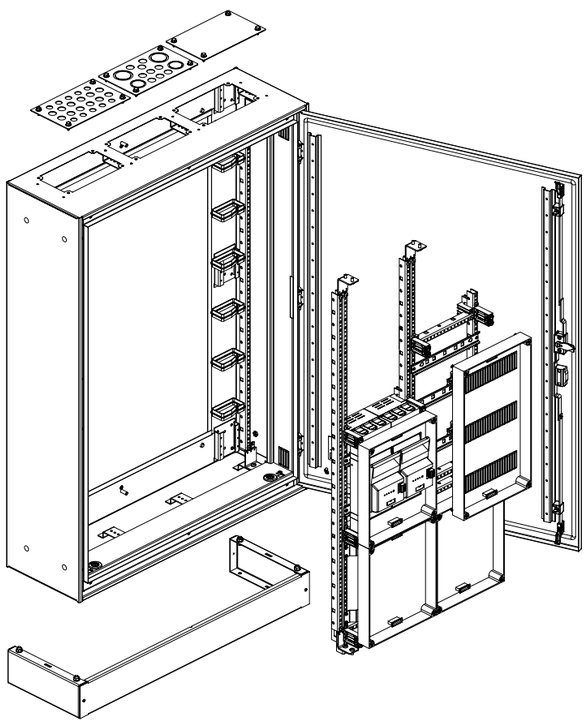

wa_vt01318

wa_vt01818

vt06905, wa_vt51413

vt07810, vt08710

Width [mm]	Height [mm]	EP frame size W x H [mm]	Pre-assembled configuration dedicated to intended for use with EP installation system prepared for F3A-flanges on top / Door with swing handle	Plinth 100 mm Side parts 1 pair / Front cover	Support rail vertical to accomodate 250 mm Module width + bracket at least 2 pcs. of EPTV to realize two / 250 mm compartments in width 600 mm
			RAL 9016 white Empty	RAL 9016 white	
			Cat. No. per unit unit = 1 pc.	Cat. No. per unit unit = 1 pc.	Cat. No. per unit unit = 1 pc.
BP-O-…-EP-W, IP31 - fully assembled					
350 (12MU/row)	860	250x750	**BP-O-350/8-EP-W** 193171	**BPZ-SS-1/249-W** 119174 **BPZ-FS-350/1-W** 194546	-
	1160	250x1050	**BP-O-350/11-EP-W** 193172		-
	1460	250x1350	**BP-O-350/14-EP-W** 300945		-
600 (24MU/row)	860	500x750	**BP-O-600/8-EP-W** 193173	**BPZ-SS-1/249-W** 119174 **BPZ-FS-600/1-W** 293498	**EPTV750 + BPZ-TW** 143842 + 143864
	1160	500x1050	**BP-O-600/11-EP-W** 193174		**EPTV1050 + BPZ-TW** 143844 + 143864
	1460	500x1350	**BP-O-600/14-EP-W** 193175		**EPTV1350 + BPZ-TW** 143846 + 143864
850 (36MU/row)	860	750x750	**BP-O-850/8-EP-W** 193176	**BPZ-SS-1/249-W** 119174 **BPZ-FS-850/1-W** 194547	**EPTV750 + BPZ-TW** 143842 + 143864
	1160	750x1050	**BP-O-850/11-EP-W** 193177		**EPTV1050 + BPZ-TW** 143844 + 143864
	1460	750x1350	**BP-O-850/14-EP-W** 193178		**EPTV1350 + BPZ-TW** 143846 + 143864
1100 (48MU/row)	860	1000x750	**BP-O-1100/8-EP-W** 193179	**BPZ-SS-1/249-W** 119174 **BPZ-FS-1100/1-W** 194548	**EPTV750 + BPZ-TW** 143842 + 143864
	1160	1000x1050	**BP-O-1100/11-EP-W** 193180		**EPTV1050 + BPZ-TW** 143844 + 143864
	1460	1000x1350	**BP-O-1100/14-EP-W** 193181		**EPTV1350 + BPZ-TW** 143846 + 143864

System overview

BP-O-…-EP-W

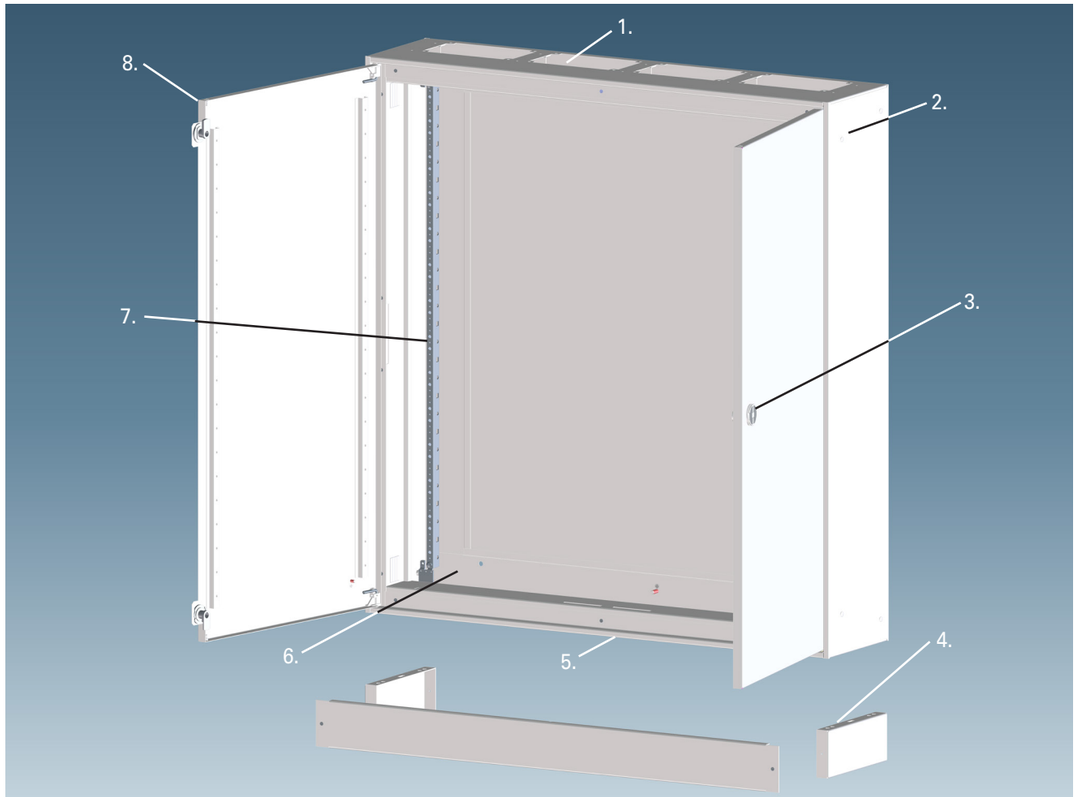

1. The flange apertures at the top are intended for F3A flanges and must be properly closed to ensure accordance with the IP55 degree of protection.
2. The enclosures can be mounted side by side and have been equipped with drilled holes and M8 thread inserts for this purpose. (The add-on connection kit BPZ-AC55-O can be ordered separately.)
3. Optionally, the standard plastic cam lock can be replaced with the metal lock BPZ-LOCK or BPZ-LOCK/DBIT3 (see accessories).
4. For the floor-standing solution, the use of base elements is recommended.
   (Side parts BPZ-SS-1/249-W with front plate BPZ-FS-…/1-W can be ordered separately, depending on the width.
5. The bottom of the enclosure does not have any pre-drilled holes for cable entry. If required, customers are able to prepare these holes themselves, and they can also rotate the mounting position of the enclosure by 180°.
6. The device can be mounted directly on the wall using either the pre-drilled holes at the back or the (external) wall-fixing brackets WFB-SET-CS (see accessories).
7. The vertical EPTV mounting rails are already pre-installed on delivery (at the left/right). Depending on the interior fittings, implementing the desired switchgear assembly may require the confi guration of additional EPTVs. (The depth of the EP support frame can be adjusted by up to 25 mm.)
8. The module widths of 350/600/850 mm have a single-door with single-point locking mechanism, while the 1,100 mm version has two doors with a three-point locking mechanism; the left-hand door has to be locked first via a cam lock (top/bottom).

Description

BP-O-…-EP-W

- Complete cabinets, prepared and ready for the installation of EP mounting units
- Degree of protection IP31
- Impact resistance IK08
- Protection class I (protective earth)
- Cable entry prepared for F3A flange
- The enclosure can be rotated by 180°
- Quick and easy change of the hinge direction, door opening angle 100°
- Standard plastic cam lock
- Direct wall mounting possible, wall-fixing brackets optionally included in the accessories
- Enclosure made from powder-coated sheet steel, RAL 9016 (traffic white)
- Lateral mounting points ensure that several enclosures can be mounted side by side

Technical data

	BP-O…-EP-W
Electrical	
Type conforms to	IEC/EN 62208
Protection class	I (protective earth)
Degree of protection	IP31 (closed version with door/flansche) IP2XC (open door, the installation level is properly protected with EP covers)
Impact resistance	IK08
Rated operational voltage	415 VAC / 50 Hz
Rated current	Max. 630 A (depending on the type of incoming circuit breaker or the busbar system being used)
Earthing concept for the enclosure	
Main earthing	By means of M8 welding bolts
Door earthing	By means of M6 welding bolts

The permissible temperature increases for switchgear assemblies with a rated current of up to 630 A can be evaluated in accordance with section 10.10.4.2 of IEC/EN 61439-1.

For the maximum permissible heat dissipation for all devices inside the distribution board at an ambient temperature of 35° C and ΔT of 20 K / 35 K at an enclosure height of 75 %, please refer to the table on enclosure dimensions; (calculation method acc.to IEC/TR 60890).

Mechanical	
Enclosure	Excellent stability thanks to the welded construction
Material	Sheet steel, phosphated and polyester powder coated (structured) with corrosion protection
Colour	Traffic white, RAL 9016
Door	Hinges on the inside, door opening angle 100°
Type	Flexible interior fittings with EP mounting units on system support frame vertical EPTV support frames are pre-installed on the left and right
Locking mechanism	Standard cam lock (plastic), can be exchanged for a metal lock with standard locking mechanism/two-way key bit
Cable entry	Open, prepared for the insertion of one standard F3A flange for each 250 mm wide module
Ambient conditions	Indoor installation (wall mounting) Max. ambient temperature +40° C Min. ambient temperature -5° C
Halogen-free, RoHS	< 1%, yes
Accessories	Wall-fixing brackets for wall mounting, a 100 mm base if used as a floor-standing cabinet, alternative lock options, add-on connection kit
Delivered as	Complete cabinet, including two units each of EPTV and BPZ-TW, in preparation for the interior fittings with EP (for each 250 mm wide module, an additional pair of EPTV and BPZ-TW units are required)

Dimensions (mm)

BP-O-…-EP-W

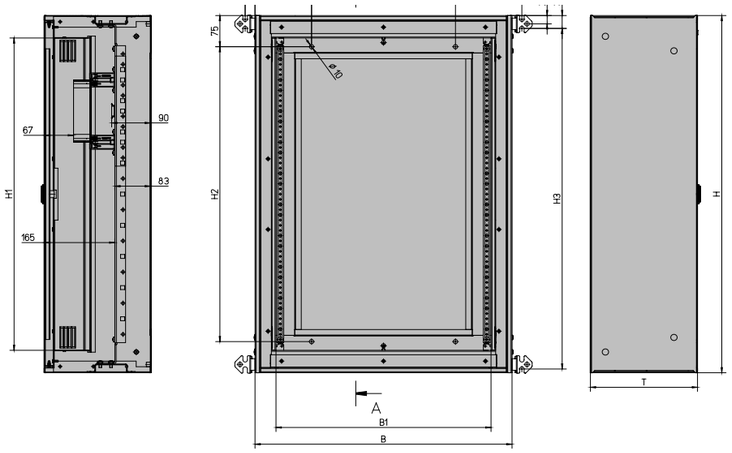

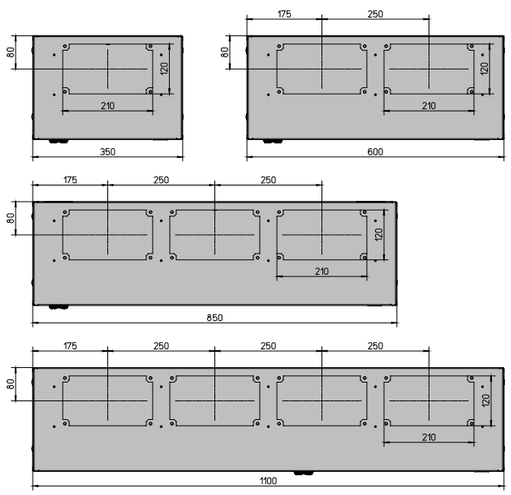

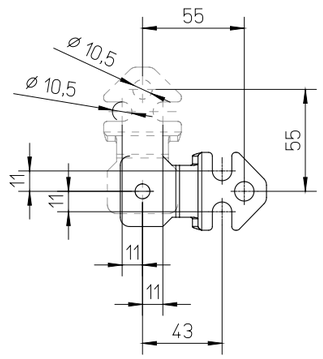

Type	Overall dimensions			Internal dimensions (front plate)		Wall mounting (Enclosure directly)		Wall mounting (via fixing bracket set)		Pv [W] (ΔT 20K)	Pv [W] (ΔT 35K)
	Width B	Height H	Depth T	Width B1	Height H1	Width B2	Height H2	B3	H3		
BP-O-350/8-EP-W	350	860	250	250	750	86	710	396	820	53	107
BP-O-350/11-EP-W	350	1160	250	250	1050	86	1010	396	1120	67	135
BP-O-350/14-EP-W	350	1460	250	250	1350	86	1310	396	1420	55	110
BP-O-600/8-EP-W	600	860	250	500	750	336	710	646	820	62	125
BP-O-600/11-EP-W	600	1160	250	500	1050	336	1010	646	1120	73	146
BP-O-600/14-EP-W	600	1460	250	500	1350	336	1310	646	1420	91	182
BP-O-850/8-EP-W	850	860	250	750	750	586	710	896	820	83	167
BP-O-850/11-EP-W	850	1160	250	750	1050	586	1010	896	1120	111	222
BP-O-850/14-EP-W	850	1460	250	750	1350	586	1310	896	1420	134	270
BP-O-1100/8-EP-W	1100	860	250	1000	750	836	710	1146	820	114	228
BP-O-1100/11-EP-W	1100	1160	250	1000	1050	836	1010	1146	1120	151	303
BP-O-1100/14-EP-W	1100	1460	250	1000	1350	836	1310	1146	1420	188	376

wa_vt01318

vt39617_r

vt06905, wa_vt51413

vt07810, vt08710

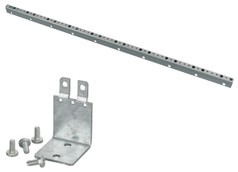

Width [mm]	Height [mm]	EP frame size W x H [mm]	Pre-assembled configuration dedicated to intended for use with EP installation system prepared for F3A-flanges on top / Door with clip-down handle		Plinth 100 mm Side parts 1 pair / Front cover.	Support rail vertical to accomodate 250 mm / Module width + bracket at least 2 pcs. of EPTV to realize two / 250 mm compartments in width 600 mm
			RAL 9016 white	RAL 7035 grey	RAL 9016 white [RAL 7035 grey]	
			Cat. No. per unit unit = 1 pc.	Cat. No. per unit unit = 1 pc	Cat. No. per unit unit = 1 pc.	Cat. No. per unit unit = 1 pc.
BPM-O-…-EP, IP55 - fully assembled						
350 (12MU/row)	860	250x750	**BPM-O-350/8-P-EP-W** 193648	**BPM-O-350/8-P-EP** 195316	**BPZ-SS-1/270-W** 119173 **[BPZ-SS-1/270]** [119167] **BPZ-FS-350/1-W** 194546 **[BPZ-FS-350/1]** [142456]	-
	1160	250x1050	**BPM-O-350/11-P-EP-W** 193649	**BPM-O-350/11-P-EP** 195317		-
	-	-	-	-		-
600 (24MU/row)	860	500x750	**BPM-O-600/8-P-EP-W** 193182	**BPM-O-600/8-P-EP** 195318	**BPZ-SS-1/270-W** 119173 **[BPZ-SS-1/270]** [119167] **BPZ-FS-600/1-W** 293498 **[BPZ-FS-600/1]** [293497]	**EPTV750 + BPZ-TW** 143842 + 143864
	1160	500x1050	**BPM-O-600/11-P-EP-W** 193183	**BPM-O-600/11-P-EP** 195319		**EPTV1050 + BPZ-TW** 143844 + 143864
	1460	500x1350	**BPM-O-600/14-P-EP-W** 193184	**BPM-O-600/14-P-EP** 195320		**EPTV1350 + BPZ-TW** 143846 + 143864
850 (36MU/row)	860	750x750	**BPM-O-850/8-P-EP-W** 193185	**BPM-O-850/8-P-EP** 195321	**BPZ-SS-1/270-W** 119173 **[BPZ-SS-1/270]** [119167] **BPZ-FS-850/1-W** 194547 **[BPZ-FS-850/1]** [142457]	**EPTV750 + BPZ-TW** 143842 + 143864
	1160	750x1050	**BPM-O-850/11-P-EP-W** 193186	**BPM-O-850/11-P-EP** 195322		**EPTV1050 + BPZ-TW** 143844 + 143864
	1460	750x1350	**BPM-O-850/14-P-EP-W** 193187	**BPM-O-850/14-P-EP** 195323		**EPTV1350 + BPZ-TW** 143846 + 143864
1100 (48MU/row)	860	1000x750	**BPM-O-1100/8-P-EP-W** 193188	**BPM-O-1100/8-P-EP** 195324	**BPZ-SS-1/270-W** 119173 **[BPZ-SS-1/270]** [119167] **BPZ-FS-1100/1-W** 194548 **[BPZ-FS-1100/1]** [142458]	**EPTV750 + BPZ-TW** 143842 + 143864
	1160	1000x1050	**BPM-O-1100/11-P-EP-W** 193189	**BPM-O-1100/11-P-EP** 195325		**EPTV1050 + BPZ-TW** 143844 + 143864
	1460	1000x1350	**BPM-O-1100/14-P-EP-W** 193190	**BPM-O-1100/14-P-EP** 195326		**EPTV1350 + BPZ-TW** 143846 + 143864
1350 (60MU/row)	1160	1250x1050	**BPM-O-1350/11-P-EP-W** 302406	-	**BPZ-SS-1/270-W** 119173 **BPZ-FS-1350/1-W** 302819	**EPTV1050 + BPZ-TW** 143844 + 143864
	1460	1250x1050	**BPM-O-1350/14-P-EP-W** 302407	-		**EPTV1350 + BPZ-TW** 143846 + 143864

System overview

BPM-O-…-EP

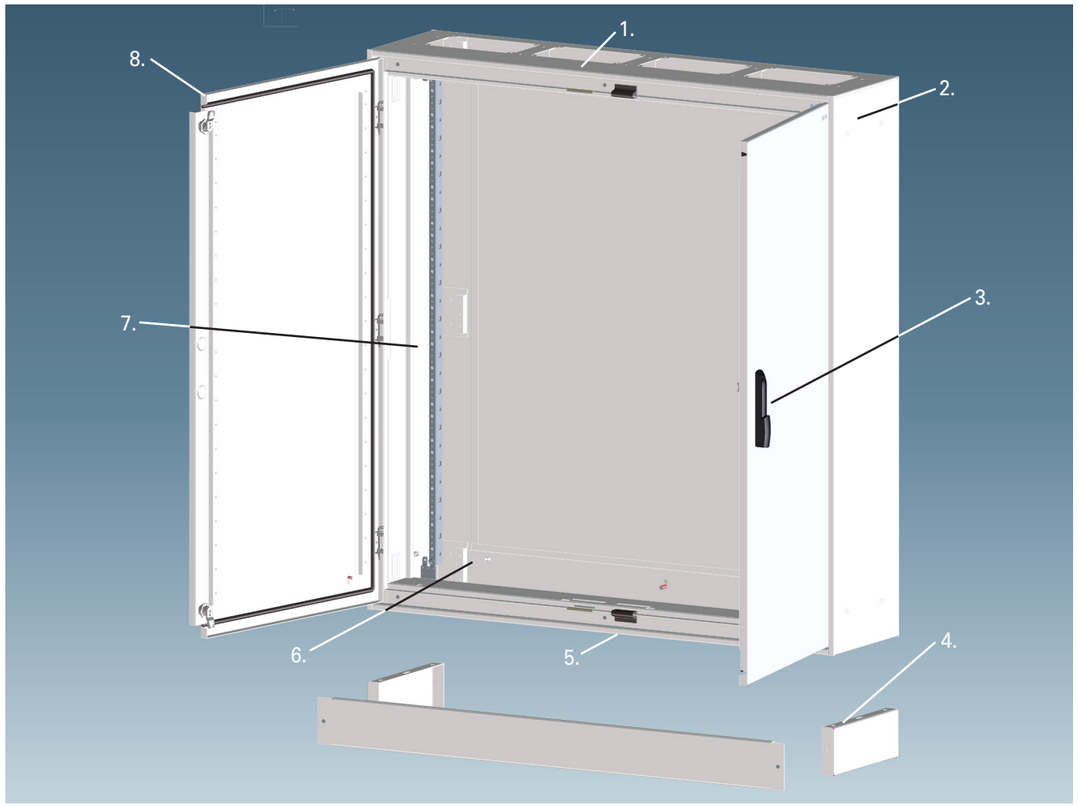

1. The flange apertures at the top are intended for F3A flanges and must be properly closed to ensure accordance with the IP55 degree of protection
2. The enclosures can be mounted side by side and have been equipped with pre-drilled holes and M8 thread inserts for this purpose. (The add-on connection kit BPZ-AC55-O can be ordered separately.)
3. Optionally, the plastic swing handle can be equipped with a profile half cylinder type PHZ-... (see accessories).
4. For the floor-standing version, the use of base elements is recommended. (The side parts BPZ-SS-1/270-W with front plate BPZ-FS-…/1-W can be ordered separately, depending on the module width).
5. The bottom of the enclosure does not have any pre-drilled holes for cable entry. If required, customers are able to prepare these holes themselves, and they can also rotate the mounting position of the enclosure by 180°.
6. The device can be mounted directly on the wall using either the pre-drilled holes at the back or the (external) wall-fixing brackets WFB-SET-CS (see accessories).
7. The vertical EPTV mounting rails are already pre-installed on delivery (at the left/right). Depending on the interior fittings, implementing the desired switchgear assembly may require the configuration of additional EPTVs. (The depth of the EP support frame can be adjusted by up to 25 mm.)
8. The standard version uses a three-point locking mechanism with drive rods. The module widths of 350/600/850 mm have a single-door, while the 1,100 mm version has two doors; the left-hand door has to be locked first using a two-way key bit (top/bottom).

Description

BPM-O-…-EP

- Complete cabinets, prepared and ready for the installation of EP mounting units
- Degree of protection IP55
- Impact resistance IK10
- Protection class I (protective earth)
- Cable entry prepared for F3A flange
- The enclosure can be rotated by 180°
- Quick and easy change of the hinge direction, door opening angle 100°
- Three-point locking mechanism with swing handler
- Direct wall mounting possible, wall-fixing brackets optionally included in the accessories
- Enclosure made from powder-coated sheet steel, RAL 9016 (traffic white), RAL 7035 (light grey)
- Lateral mounting points ensure that several enclosures can be mounted side by side

Technical data

	BPM-O-…-EP
Electrical	
Type conforms to	IEC/EN 62208
Protection class	I (protective earth)
Degree of protection	IP55 (closed version with door/flanges) IP2XC (open door, the installation level is properly protected with EP covers)
Impact resistance	IK10
Rated operational voltage	415 V AC / 50 Hz
Rated current	Max. 630 A (depending on the type of incoming circuit breaker or the busbar system being used)
Earthing concept for the enclosure	
Main earthing	By means of M8 welding bolts
Door earthing	By means of M6 welding bolts

The permissible temperature increases for switchgear assemblies with a rated current of up to 630 A can be evaluated in accordance with section 10.10.4.2 of IEC/EN 61439-1.

For the maximum permissible heat dissipation for all devices inside the distribution board at an ambient temperature of 35° C and ΔT of 20 K / 35 K at an enclosure height of 75 %, please refer to the table on enclosure dimensions; (calculation method acc.to IEC/TR 60890).

Mechanical	
Enclosure	Excellent stability thanks to the welded construction
Material	Sheet steel, phosphated and polyester powder coated (structured) with corrosion protection
Color	Traffic white, RAL 9016 / light grey, RAL 7035
Door	With continuous foamed gasket, hinges on the inside, door opening angle 100°
Type	Flexible interior fittings with EP mounting units on system support frame vertical EPTV support frames are pre-installed on the left and right
Locking mechanism	Three-point locking mechanism with swing handler, lock cylinder optionally included in the accessories
Cable entry	Open, prepared for the insertion of one standard F3A flange for each 250 mm wide module
Ambient conditions	Indoor installation (wall mounting) Max. ambient temperature +40° C Min. ambient temperature -5° C
Halogen-free, RoHS	< 1%, yes
Accessories	Wall-fixing brackets for wall mounting, a 100 mm base if used as a floor-standing cabinet, lock cylinders as inserts for swing handlers, various F3A fl anges for cable entry, add-on connection kit
Delivered as	Complete cabinet, including two units each of EPTV and BPZ-TW, in preparation for the interior fittings with EP (for each 250 mm wide module, an additional pair of EPTV and BPZ-TW units are required)

Dimensions (mm)

BPM-O-…-EP

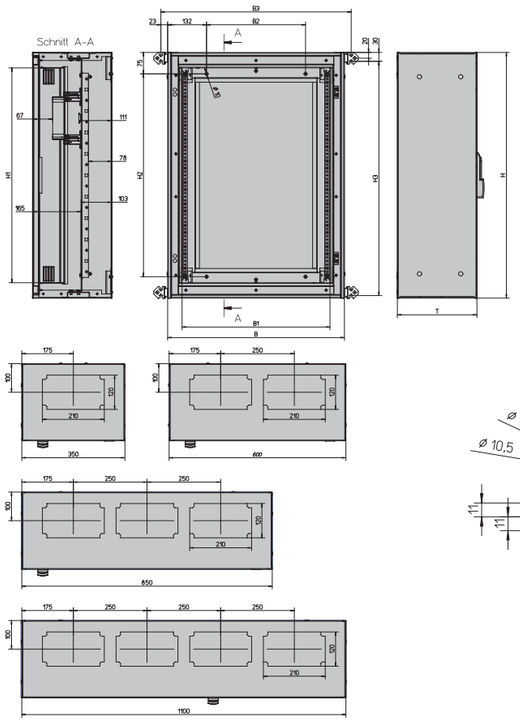

Type	B	H	T	B1	H1	B2	H2	B3	H3	Pv [W] (ΔT 20K)	Pv [W] (ΔT 35K)
BPM-O-350/8-P-EP-W	350	860	270	250	752	86	710	396	820	107	187
BPM-O-350/11-P-EP-W		1160	270		1052		1010		1120	139	243
BPM-O-600/8-P-EP-W	600	860	270	500	752	336	710	646	820	150	263
BPM-O-600/11-P-EP-W		1160	270		1052		1010		1120	194	340
BPM-O-600/14-P-EP-W		1460	270		1352		1310		1420	238	416
BPM-O-850/8-P-EP-W	850	860	270	750	752	586	710	896	820	194	339
BPM-O-850/11-P-EP-W		1160	270		1052		1010		1120	249	436
BPM-O-850/14-P-EP-W		1460	270		1352		1310		1420	305	533
BPM-O-1100/8-P-EP-W	1100	860	270	1000	752	836	710	1146	820	135	271
BPM-O-1100/11-P-EP-W		1160	270		1052		1010		1120	304	532
BPM-O-1100/14-P-EP-W		1460	270		1352		1310		1420	371	649

Type	Overall dimensions			Internal dimensions (front plate)		Wall mounting (Enclosure directly)		Wall mounting (via fixing bracket set)		Pv [W] (ΔT 20K)	Pv [W] (ΔT 35K)
	Width B	Height H	Depth T	Width B1	Height H1	Width B2	Height H2	B3	H3		
BPM-O-350/8-P-EP(-W)	350	860	270	250	750	86	710	396	820	55	111
BPM-O-350/11-P-EP(-W)	350	1160	270	250	1050	86	1010	396	1120	52	104
BPM-O-600/8-P-EP(-W)	600	860	270	500	750	336	710	646	820	65	130
BPM-O-600/11-P-EP(-W)	600	1160	270	500	1050	336	1010	646	1120	76	152
BPM-O-600/14-P-EP(-W)	600	1460	270	500	1350	336	1310	646	1420	97	195
BPM-O-850/8-P-EP(-W)	850	860	270	750	750	586	710	896	820	87	175
BPM-O-850/11-P-EP(-W)	850	1160	270	750	1050	586	1010	896	1120	123	248
BPM-O-850/14-P-EP(-W)	850	1460	270	750	1350	586	1310	896	1420	141	283
BPM-O-1100/8-P-EP(-W)	1100	860	270	1000	750	836	710	1146	820	121	242
BPM-O-1100/11-P-EP(-W)	1100	1160	270	1000	1050	836	1010	1146	1120	158	317
BPM-O-1100/14-P-EP(-W)	1100	1460	270	1000	1350	836	1310	1146	1420	199	399
BPM-O-1350/11-P-EP-W	1350	1160	270	1250	1050	1086	1010	1396	1120	206	414
BPM-O-1350/14-P-EP-W	1350	1460	270	1250	1350	1086	1310	1396	1420	268	537

System Overview

BPM-F-…-EP, IP55

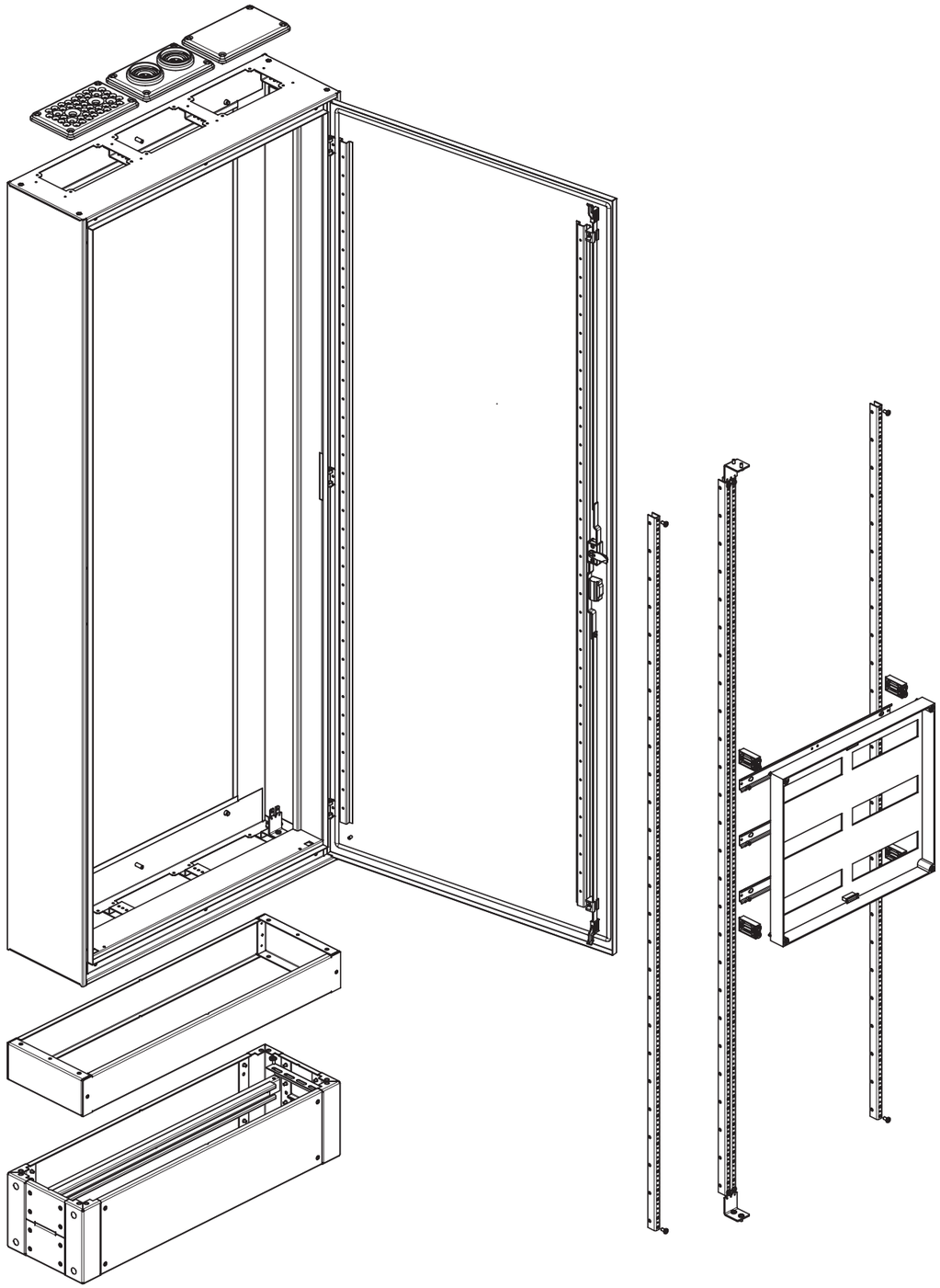

xEnergy Distribution Boards

Floor-standing distribution board BPM-F-…-EP, IP55

			wa_vt04215	vt03710	vt11718_r	vt39017_r	vt07810, vt08710
Width [mm]	Height [mm]	EP frame size W x H [mm]	Pre-assembled configuration intended for use with EP installation system / Prepared for F3A-flanges on top/bottom / Door with clip-down handle BPZ-SH-L / Standard depth of 250 mm			Pre-assembled configuration intended for use with EP / Installation system prepared for F3A-flanges on top/bottom / Door with clip-down handle BPZ-SH-L extended depth of 400 mm / Dedicated as add-on connection cabinet	Support rail vertical with bracket to accomodate 250/500/750/1000 mm / Module widths / At least 2 pcs. of EPTV to realize two 250 mm compartments in width 600 mm
			RAL 7035 grey Empty		Incl. fully assembled EP support frame consists of EPTV1800/BPZ-TW and APH(05) to fit for module size EP23xx (250x450mm)	RAL 7035 grey Empty	
			Cat. No. per unit unit = 1 pc.		Cat. No. per unit unit = 1 pc.	Cat. No. per unit unit = 1 pc.	Cat. No. per unit unit = 1 pc.
BPM-F-…-EP, IP55 - fully assembled							
350 (12MU/ row)	1910	250x1800	**BPM-F-350/19/2-P-EP** 147399		-	**BPM-F-350/19/4-P-EP** 193191	**EPTV1800 + BPZ-TW** 143849 + 143864
	2060	250x1950	**BPM-F-350/20/2-P-EP** 142444		-	-	**EPTV1950A-BP + BPZ-TW** 143850 + 143864
600 (24MU/ row)	1910	500x1800	**BPM-F-600/19/2-P-EP** 147410		**BPM-F-600/19/2-P-288-EP** 193650	**BPM-F-600/19/4-P-EP** 193192	**EPTV1800 + BPZ-TW** 143849 + 143864
	2060	500x1950	**BPM-F-600/20/2-P-EP** 142445		-	-	**EPTV1950A-BP + BPZ-TW** 143850 + 143864
850 (36MU/ row)	1910	750x1800	**BPM-F-850/19/2-P-EP** 147411		**BPM-F-850/19/2-P-432-EP** 193651	**BPM-F-850/19/4-P-EP** 193193	**EPTV1800 + BPZ-TW** 143849 + 143864
	2060	750x1950	**BPM-F-850/20/2-P-EP** 142446		-	-	**EPTV1950A-BP + BPZ-TW** 143850 + 143864
1000 (46MU/ row)	1910	1000x1800	**BPM-F-1100/19/2-P-EP** 147412		**BPM-F-1100/19/2-P-576-EP** 193652	**BPM-F-1100/19/4-P-EP** 193194	**EPTV1800 + BPZ-TW** 143849 + 143864
	2060	1000x1950	**BPM-F-1100/20/2-P-EP** 142447		-	-	**EPTV1950A-BP + BPZ-TW** 143850 + 143864
1350 (60MU/ row)	1910	1250x1800	**BPM-F-1350/19/2-P-EP** 147413		-	**BPM-F-1350/19/4-P-EP** 193195	**EPTV1800 + BPZ-TW** 143849 + 143864
	2060	1250x1950	**BPM-F-1350/20/2-P-EP** 142448		-	-	**EPTV1950A-BP + BPZ-TW** 143850 + 143864

xEnergy Distribution Boards

Floor-standing distribution board BPM-F-…-EP, IP55

2.4

vt105014	vt06905, wa_vt51413	vt02818, vt02718	vt40017	wa_vt23313	vt40317	vt40217	
Sheet metal door as spare part / Clip-down handle BPZ-SH-L	Plinth 100 mm / Side parts 1 pair / Front cover	Plinth 200 mm / Side parts 1 pair / Front cover	Cable arrangement / Plinth 75 mm / Cable strain-relief rail	Cable arrangement / Plinth 100 mm / Cable strain-relief rail		Cable arrangement / Plinth 200 mm / Cable strain-relief rail	
RAL 7035 grey	RAL 7035 grey Standard depth of 250 mm	RAL 7035 grey Standard depth of 250 mm	RAL 7035 grey Extended depth of 400 mm	RAL 7035 grey Standard depth of 250 mm	Extended depth of 400 mm	RAL 7035 grey Standard depth of 250 mm	Extended depth of 400 mm
Cat. No. per unit unit = 1 pc.	Cat. No. per unit unit = 1 pc.	Cat. No. per unit unit = 1 pc.	Cat. No. per unit unit = 1 pc.	Cat. No. per unit unit = 1 pc.	Cat. No. per unit unit = 1 pc.		
BPZ-DMS-350/19-P-EP 147414	**BPZ-SS-1/250-EP** 142454	**BPZ-SS-2/250-EP** 142455	**BPZ-KR3.50/400** 193196	**BPZ-KR3.51/250** 142464	**BPZ-KR3.51/400** 193201	**BPZ-KR3.52/250** 142469	**BPZ-KR3.52/400** 193205
BPZ-DMS-350/20-P-EP 142449	**BPZ-FS-350/1** 142456	**BPZ-FS-350/2** 142460	**BPZ-KFS-350** 142475	**BPZ-KFS-350** 142475	**BPZ-KFS-350** 142475	**BPZ-KFS-350** 142475	**BPZ-KFS-350** 142475
BPZ-DMS-600/19-P-EP 147415	**BPZ-SS-1/250-EP** 142454	**BPZ-SS-2/250-EP** 142455	**BPZ-KR60/400** 193197	**BPZ-KR61/250** 142465	**BPZ-KR61/400** 193220	**BPZ-KR62/250** 142470	**BPZ-KR62/400** 193225
BPZ-DMS-600/20-P-EP 142450	**BPZ-FS-600/1** 293497	**BPZ-FS-600/2** 293499	**BPZ-KFS-600** 116294	**BPZ-KFS-600** 116294	**BPZ-KFS-600** 116294	**BPZ-KFS-600** 116294	**BPZ-KFS-600** 116294
BPZ-DMS-850/19-P-EP 147416	**BPZ-SS-1/250-EP** 142454	**BPZ-SS-2/250-EP** 142455	**BPZ-KR8.50/400** 193198	**BPZ-KR8.51/250** 142466	**BPZ-KR8.51/400** 193202	**BPZ-KR8.52/250** 142471	**BPZ-KR8.52/400** 193206
BPZ-DMS-850/20-P-EP 142451	**BPZ-FS-850/1** 142457	**BPZ-FS-850/2** 142461	**BPZ-KFS-850** 142476	**BPZ-KFS-850** 142476	**BPZ-KFS-850** 142476	**BPZ-KFS-850** 142476	**BPZ-KFS-850** 142476
BPZ-DMS-1100/19-P-EP 147417	**BPZ-SS-1/250-EP** 142454	**BPZ-SS-2/250-EP** 142455	**BPZ-KR110/400** 193199	**BPZ-KR111/250** 142467	**BPZ-KR111/400** 193203	**BPZ-KR112/250** 142472	**BPZ-KR112/400** 193207
BPZ-DMS-1100/20-P-EP 142452	**BPZ-FS-1100/1** 142458	**BPZ-FS-1100/2** 142462	**BPZ-KFS-1100** 142477	**BPZ-KFS-1100** 142477	**BPZ-KFS-1100** 142477	**BPZ-KFS-1100** 142477	**BPZ-KFS-1100** 142477
BPZ-DMS-1350/19-P-EP 147418	**BPZ-SS-1/250-EP** 142454	**BPZ-SS-2/250-EP** 142455	**BPZ-KR130/400** 193200	**BPZ-KR131/250** 142468	**BPZ-KR131/400** 193204	**BPZ-KR132/250** 142473	**BPZ-KR132/400** 193208
BPZ-DMS-1350/20-P-EP 142453	**BPZ-FS-1350/1** 142459	**BPZ-FS-1350/2** 142463	**BPZ-KFS-1350** 142478	**BPZ-KFS-1350** 142478	**BPZ-KFS-1350** 142478	**BPZ-KFS-1350** 142478	**BPZ-KFS-1350** 142478

Description

BPM-F-…-EP

- Complete cabinets, prepared and ready for the installation of EP mounting units
- Degree of protection IP55
- Impact resistance IK10
- Protection class I (protective earth)
- Cable entry prepared for F3A flange
- Quick and easy change of the hinge direction, door opening angle ~100°
- Swing handler closing mechanism
- Additional wall fixing to avoid tilting
- Enclosure made from powder-coated sheet steel, RAL 7035
- Add-on connection at depth 400 mm provided

Technical data

	BPM-F-…-EP
Electrical	
Type conforms to	IEC/EN 62208
Protection class	I (protective earth)
Degree of protection	IP55 (closed version with door/flansche) IP2XC (open door, the installation level is properly protected with EP covers)
Impact resistance	IK10
Rated operational voltage	415 VAC / 50 Hz
Rated current	Max. 630 A (depending on the type of incoming circuit breaker or the busbar system being used)
Earthing concept for the enclosure	
Main earthing	By means of M8 welding bolts
Door earthing	By means of M6 welding bolts

The permissible temperature increases for switchgear assemblies with a rated current of up to 630 A can be evaluated in accordance with section 10.10.4.2 of IEC/EN 61439-1.

For the maximum permissible heat dissipation for all devices inside the distribution board at an ambient temperature of 35° C and ΔT of 20 K / 35 K at an enclosure height of 75 %, please refer to the table on enclosure dimensions; (calculation method acc.to IEC/TR 60890).

Mechanical	
Enclosure	Excellent stability thanks to the welded construction
Material	Sheet steel 1.25 mm, phosphated and polyester powder coated (structured) with corrosion protection
Colour	Light grey RAL 7035
Door	With encircling foamed sealing, hinges on the inside, door opening angle ~100° Doors hinged either left or right, width 1000 / 1200 mm in double-wing design
Type	Flexible interior fittings with EP mounting units on system support frame vertical EPTV support frames are pre-installed on the left and right prepared EP-cabinets incl. support frame with fixed arrangement to accommodate standard modules EP23xx (250x450 mm)
Locking mechanism	Three-point locking mechanism with swing handler and rod drive (optional lock cylinder as accessory)
Cable entry	Open, prepared for F3A flange on both sides (top+bottom) lateral F3A cut-outs (top+bottom) for additional cable entry or cross-wiring at a depth of 400 mm
Busbar system	Prepared for incorporating a continuous busbar system over several sections with depth 400 mm Generous cut-outs left/right (closed with blind plates when delivered)
Ambient condition	Indoor installation (Assembly with/without plinth with additional fixing to a wall, „stand-alone" not recommended) Max. ambient temperature +40° C Min. ambient temperature -5° C
Halogen-free, RoHS	< 1%, yes
Accessories	Base options respectively cable arrangement plinths in height 100 / 200 mm, cabinet-based EP parts
Delivered as	Complete cabinet, including two units each of EPTV and BPZ-TW, in preparation for the interior fittings with EP (for each 250 mm wide module, an additional pair of EPTV and BPZ-TW units are required) Wall fixing brackets BPZ-WW (for depth 250 mm)

Dimensions (mm)

BPM-F-…-EP

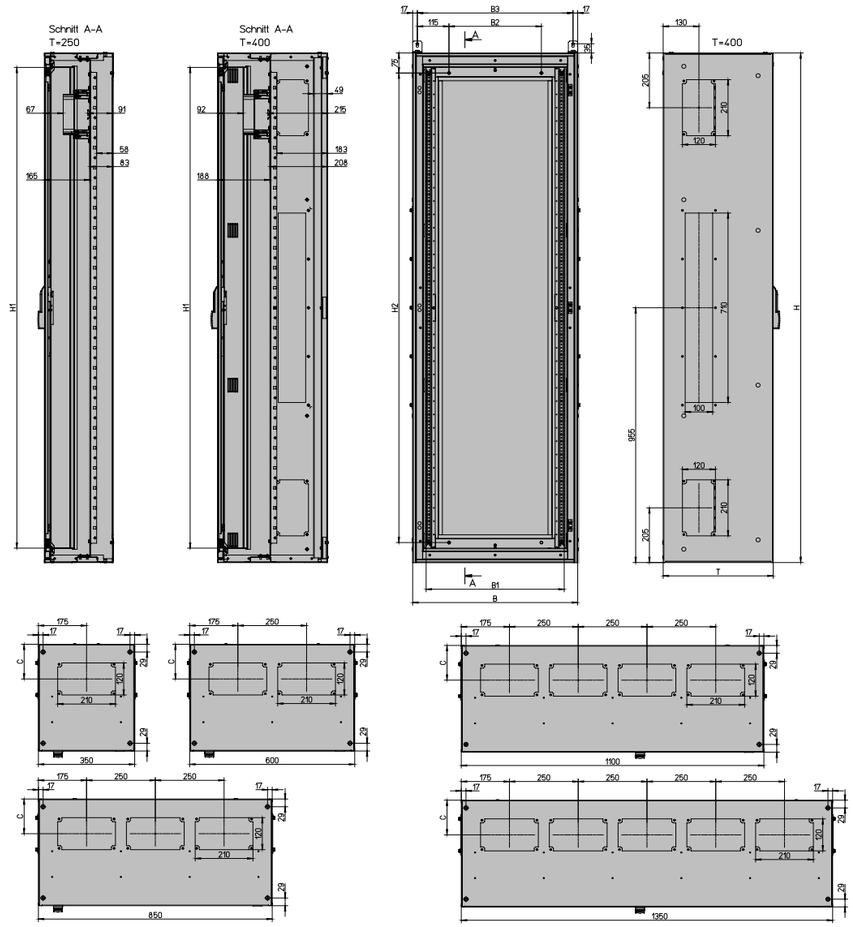

Type	Overall dimensions			Internal dimensions (front plate)		Wall mounting (Enclosure directly)		Wall mounting (additional)		Pv [W] (ΔT 20K)	Pv [W] (ΔT 35K)
	Width B	Height H	Depth T	Width B1	Height H1	Width B2	Height H2	B3	C		
BPM-F-350/19/2-P-EP	350	1910	250	250	1800	86	1760	316	90	65	131
BPM-F-350/20/2-P-EP	350	2060	250	250	1950	86	1910	316	90	70	141
BPM-F-600/19/2-P-EP	600	1910	250	500	1800	336	1760	566	90	119	240
BPM-F-600/20/2-P-EP	600	2060	250	500	1950	336	1910	566	90	127	255
BPM-F-850/19/2-P-EP	850	1910	250	750	1800	586	1760	816	90	182	366
BPM-F-850/20/2-P-EP	850	2060	250	750	1950	586	1910	816	90	183	368
BPM-F-1100/19/2-P-EP	1100	1910	250	1000	1800	836	1760	1066	90	213	428
BPM-F-1100/20/2-P-EP	1100	2060	250	1000	1950	836	1910	1066	90	221	444
BPM-F-1350/19/2-P-EP	1350	1910	250	1250	1800	1086	1760	1316	90	254	509
BPM-F-1350/20/2-P-EP	1350	2060	250	1250	1950	1086	1910	1316	90	268	537
BPM-F-350/19/4-P-EP	350	1910	400	250	1800	86	1760	-	130	110	221
BPM-F-600/19/4-P-EP	600	1910	400	500	1800	336	1760	-	130	175	351
BPM-F-850/19/4-P-EP	850	1910	400	750	1800	586	1760	-	130	217	436
BPM-F-1100/19/4-P-EP	1100	1910	400	1000	1800	836	1760	-	130	268	538
BPM-F-1350/19/4-P-EP	1350	1910	400	1250	1800	1086	1760	-	130	310	622

193170_LDO, 293313_LDO, 501316_LDO1

Distribution Boards

Distribution Boards

• **Chapter 0**
Table of Contents ..... Page 3

• **Chapter 1**
Field distribution boards protection class II ..... Page 4
1.1 Surface-mounted field distribution board EWK-G.., IP31 ..... Page 5

• **Chapter 2**
Enclosures / switchgear cabinets for installation system EP in protection class I and II ..... Page 10
2.1 Surface-mounted and floor-standing distribution board EMC2-H.../55-W, IP55 ..... Page 11
2.2 Surface-mounted distribution board BP-0-...-EP-W, IP31 ..... Page 20
2.3 Surface-mounted distribution board BPM-0-...-EP, IP55 ..... Page 26
2.4 Floor-standing distribution board BPM-F-...-EP, IP55 ..... Page 29

• **Chapter 3**
EP installation system - standard modules / mounting kits ..... Page 34
3.1 EP installation system - standard modules / Fitting-kits, Width 250 mm ..... Page 36
3.2 EP installation system - standard modules / Fitting-kits, Width 500 mm ..... Page 40
3.3 EP installation system - standard modules / Fitting-kits, Width 750 mm ..... Page 44
3.4 EP installation system - standard modules / Fitting-kits, Technical data ..... Page 46

• **Chapter 4**
EP installation system - general accessories ..... Page 53

• **Chapter 5**
Enclosures / switchgear cabinets for installation system ProfiSNAP ..... Page 66
5.1 Surface-mounted distribution board BP-0-..., IP30 (pre-assembled) ..... Page 67
5.2 Surface-mounted distribution board BP-0-..., IP30 (flat-pack, grey) ..... Page 72
5.3 Surface-mounted distribution board BP-0-..., IP30 (flat-pack, white) ..... Page 74
5.4 Surface-mounted distribution board BPM-0-..., IP55 ..... Page 95
5.5 Flush-mounted distribution board BP(A/M)-U-3S-..., IP30/IP43/IP54 ..... Page 105
5.6 Floor-standing distribution board BP-F-..., IP30 ..... Page 119
5.7 Outdoor distribution board BP-VF/DZ..., IP44 ..... Page 130
5.8 Floor-standing distribution board BPM-F-..., IP55 ..... Page 137
5.9 Shared compartments inside distribution boards BP(M)-0, BP(M)-F ..... Page 149

• **Chapter 6**
ProfiSNAP installation system - components for interior fitting ..... Page 154
6.1 Front plates, blind and with 45mm cut-out for DIN-rail devices ..... Page 156
6.2 Mounting kits for Moulded Case Circuit Breaker ..... Page 164
6.3 Mounting kits for Fuse Switch Disconnectors ..... Page 182
6.4 Mounting kits for BZM, Dumeco and QSA ..... Page 188
6.5 Mounting kits for Earthing and Neutral conductors ..... Page 189
6.6 Mounting plates for universal fixing of different components ..... Page 192
6.7 Mounting kits for Energy Meters and various metering equipment ..... Page 200

• **Chapter 7**
ProfiSNAP installation system - general accessories ..... Page 207

• **Chapter 8**
General accessories xEnergy Basic ..... Page 228

• **Chapter 9**
Overall technical data xEnergy Basic ..... Page 248

• **Chapter 10**
Verification of temperature rise by testing - selection of reference examples ..... Page 253

System Overview

xEnergy Basic with standardized fitting-system EP

The EP system is an installation system with increased contact safety for the operator, because all modules/ cover plates are made of plastic. The structure is rational and flexible.

A large number of standard mounting kits, especially for EATON protective devices and components enables efficient project planning for different applications. Usually there is no further mechanical processing necessary. The two major benefits are ease of use and time savings.

In addition, the installation space of the cabinets / wall enclosures is divided into uniform modules/sections, 150 mm in height and 250 mm in width, which can be combined with each other individually.

The distance between single rows for devices has also been standardized: It is 150 mm for the entire EP installation system. It gives more space for the installer to route the cables/wiring properly.

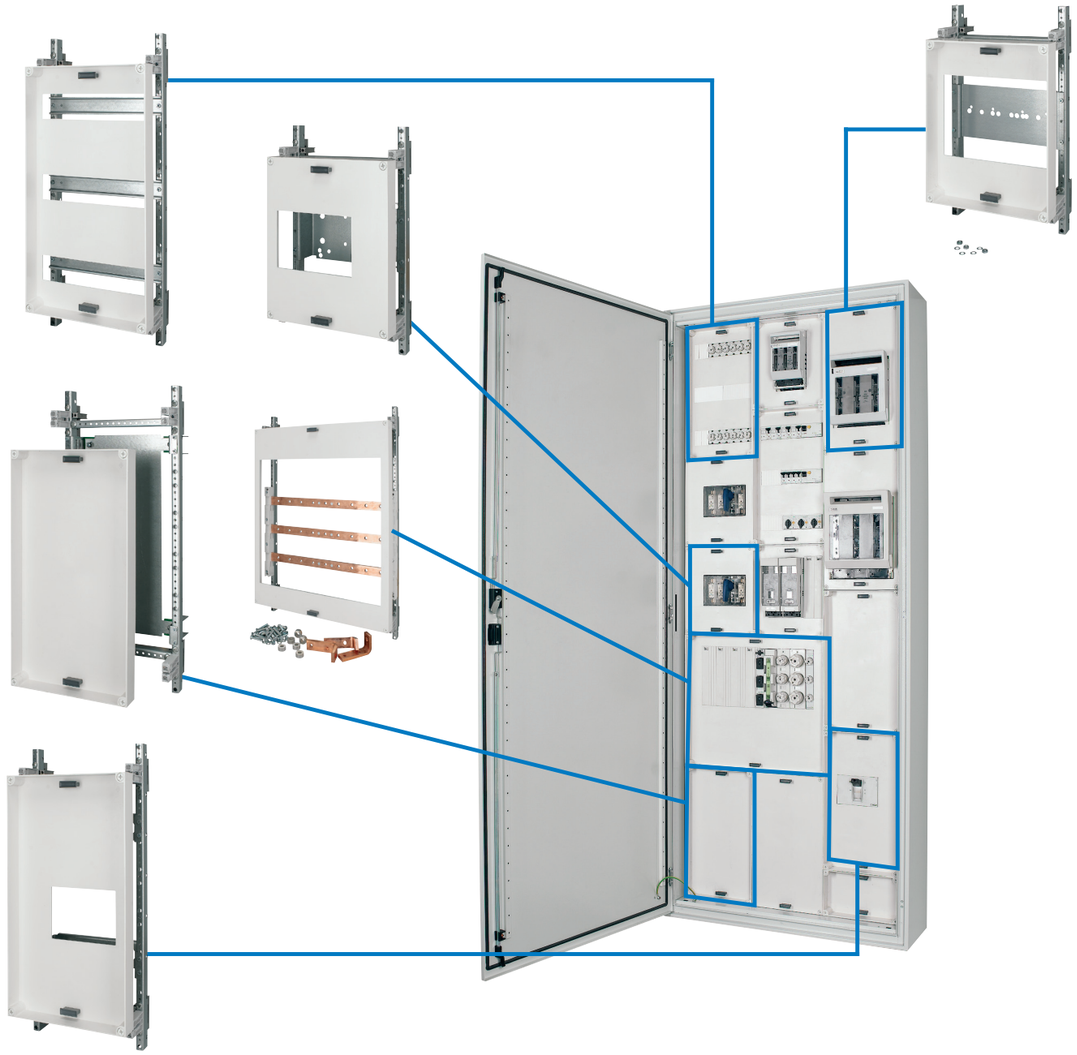

xEnergy Distribution Boards

EP installation system - standard modules / mounting kits, width 250 mm

Width [mm]	Height [mm]		vt06310	vt06410	vt05510
(12 MU / row) incl. fastener kit/handles (cover plate holders are not part of delivery)			Installation on EP support frame Cover plate for individual use; intended to be used as hood or pan RAL 9002 grey	Installation on EP support frame Cover plate for modular devices and related components; intended to be used as hood or pan RAL 9002 grey	Installation on EP support frame Mounting kit for modular devices and related components; intended to be used as pan incl. DIN-rails 35x7.5 mm (1 rail per 150 mm section) EP2xRGT (transparent cover incl.) RAL 9002 grey
			Cat. No. per unit unit = 1 pc.	Cat. No. per unit unit = 1 pc.	Cat. No. per unit unit = 1 pc.
EP installation system - standard modules					
250	150		**EP21AP** 143867	**EP21ORG** 143884	**EP21RG** 143897
	300		**EP22AP** 143868 **EP22APT** 193665	**EP22ORG** 143885	**EP22RG** 143898 **EP22RGT** 193663
	450		**EP23AP** 143869 **EP23APT** 193666	**EP23ORG** 143886	**EP23RG** 143899 **EP23RGT** 193664
	600		**EP24AP** 143870	**EP24ORG** 143887	**EP24RG** 143900
	750		**EP25AP** 143871	**EP25ORG** 143888	**EP25RG** 143901

xEnergy Distribution Boards

EP installation system - standard modules / mounting kits, width 250 mm

vt05410	vt06910	vt05810	vt06110
Installation on EP support frame / Mounting kit for modular devices / terminal blocks without access / intended to be used as hood or pan incl. DIN-rails 35x7.5 mm / (1 rail per 150 mm section) EP2xRK2-V (vertical alignment) EP2xRKxA (depth-adjustable) RAL 9002 grey	Installation on EP support frame / Mounting kit for individual use and general fixing of devices / intended to be used as hood or pan incl. mounting plate and depth-adjustable brackets EP2xMP(A) (non-perforated) EP2xMPL (micro-perforated) RAL 9002 grey	Installation on EP support frame / Cover plate for busbar-mounted fuse base sizes D02, DII and DIII; intended to be used as pan; fitting unit is fed-in from the side 3-pole busbar system (60 mm) not incl. EP22GRC… (max. size 162 mm - vertical) EP23GRC… (max. size 324 mm - horizontal) RAL 9002 grey	Installation on EP support frame / Cover plate for busbar-mounted NH fuse switch-disconnector size NH000/NH00; intended to be used as pan; fitting unit is fed-in from the side 3-pole busbar system (60 mm) not incl. EP22GRT… (3x NH000) RAL 9002 grey
Cat. No. per unit unit = 1 pc.	Cat. No. per unit unit = 1 pc.	Cat. No. per unit unit = 1 pc.	Cat. No. per unit unit = 1 pc.
EP21RK1 143910	**EP21MP** 143916	-	-
EP22RK2 143911 **EP22RK2-V** 193667 **EP22RK2A** 193669	**EP22MP** 143917 **EP22MPA** 193659	**EP22GRC162-OG** 143943	**EP22GRT3000R-OG** 143947
EP23RK2 143912 **EP23RK2-V** 193668 **EP23RK3A** 193670	**EP23MP** 143918 **EP23MPA** 193660 **EP23MPL** 193657	**EP23GRC324-OG** 143945	-

xEnergy Distribution Boards

EP installation system - standard modules / mounting kits, width 250 mm

vt05710

vt05210

vt05310

vt06510

Width [mm]	Height [mm]				
(12 MU / row) incl. fastener kit/handles (cover plate holders are not part of delivery)		Installation on EP support frame / Mounting kit for NH fuse switch-disconnectors, frame size NH00 - NH2, up to 400 A, incl. mounting plate (if needed) / R-variants are dedicated for busbar mounting, 3-pole busbar system (60mm) not included / intended to be used as pan; EP22XNH001… (1x XNH00 3p/4p)			Installation on EP support frame / Mounting kit for NH In-line fuse switch-disconnector, frame size NH00-NH3, up to 630 A, intended to be used as pan; NH00: 3-pole busbar system (100 mm) NH1-3: 3-pole busbar system (185 mm)
		EP22XNH002… (2x XNH00 3p) EP23XNH002… (2x XNH00 3p) RAL 9002 grey	EP23XNH11… (1x XNH1 3p) RAL 9002 grey	EP23XNH21… (1x XNH2 3p) RAL 9002 grey	EP24GTL… (4x NH00, Cu 30x5 mm) EP25GTL… (1x NH1-3, Cu 2x30x10 mm) RAL 9002 grey
		Cat. No. per unit unit = 1 pc.	Cat. No. per unit unit = 1 pc.	Cat. No. per unit unit = 1 pc.	Cat. No. per unit unit = 1 pc.
EP installation system - standard modules					
250	150	-			
	300	**EP22XNH001-OG** 184527 **EP22XNH002-OG** 184528 **EP22XNH001-4-OG** 184530 **EP22XNH001R-OG** 184537 **EP22XNH002R-OG** 184538 **EP22XNH002/XRAIL-OG** 193655			
	450	**EP23XNH002R-OG** 187907	**EP23XNH11-OG** 184532 **EP23XNH11R-OG** 184540	**EP23XNH21-OG** 184534 **EP23XNH21R-OG** 184541	-
	600	-	-	-	**EP24GTL400-OG** 143949
	750	-	-	-	**EP25GTL1-OG** 193673

xEnergy Distribution Boards

EP installation system - standard modules / mounting kits, width 250 mm

vt05910

vt05610

vt06710

		Installation on EP support frame / Mounting kit for switch-disconnector, type Dumeco, 3-/4-pole, up to 400 A, / intended to be used as pan; EP21GLD125… (1x DMM125) EP22GLD160… (1x DMV160) EP22GLD250… (1x DMVS160) EP22GLD250… (1x DMV250/DMV400) RAL 9002 grey	Installation on EP support frame Mounting kit for fuse switch-disconnector, type QSA, 3-/4-pole,up to 160 A, intended to be used as hood; EP22QSA… (1x QSA40/QSA63) EP22QSA… (1x QSA100/QSA160) RAL 9002 grey	Installation on EP support frame Mounting kit for Moulded Case Circuit Breaker (MCCB), type NZM, 3-/4-pole, up to 630 A, incl. mounting plate K-variants are dedicated for toggle operation, R-variants for rotary door handle / direct swing handle, XR-variants for remote operator (motor), intended to be used as hood or pan; EP22NZM1… (1x NZM1-A160) EP22NZM12… (2x NZM1-A160) RAL 9002 grey	EP22NZM2… (1x NZM2-A250) RAL 9002 grey	EP23NZM3… (1x NZM3-A630) RAL 9002 grey
		Cat. No. per unit unit = 1 pc.	Cat. No. per unit unit = 1 pc.	Cat. No. per unit unit = 1 pc.	Cat. No. per unit unit = 1 pc.	Cat. No. per unit unit = 1 pc.
250	150	**EP21GLD125-OG** 143967	-	-	-	-
	300	**EP22GLD160-OG** 143968 **EP22GLD250/400-OG** 143969	**EP22QSA063/125/160-OG** 143972	**EP22NZM1K-OG** 195397 **EP22NZM1R-OG** 143975 **EP22NZM12K-OG** 195398 **EP22NZM12R-OG** 193656	**EP22NZM2K-OG** 195399 **EP22NZM2R-OG** 143976 **EP22NZM2XR-OG** EP-502511	-
	450	-	-	-	-	**EP23NZM3K-OG** 143977 **EP23NZM3R-OG** 143978 **EP23NZM3XR-OG** EP-502512
	600	-	-		-	-
	750	-	-	-	-	-

Width [mm]	Height [mm]		vt06310	vt06410	vt05510
(24 MU / row) incl. fastener kit/handles (cover plate holders are not part of delivery)					
			Installation on EP support frame Cover plate for individual use; intended to be used as hood or pan	Installation on EP support frame Cover plate for modular devices and related components; intended to be used as hood or pan	Installation on EP support frame Mounting kit for modular devices and related components; intended to be used as pan incl. DIN-rails 35x7.5 mm (1 rail per 150 mm section)
			RAL 9002 grey	RAL 9002 grey	RAL 9002 grey
			Cat. No. per unit unit = 1 pc.	Cat. No. per unit unit = 1 pc.	Cat. No. per unit unit = 1 pc.
EP installation system - standard modules					
500	150		**EP51AP** 143872	**EP51ORG** 143889	**EP51RG** 143902
	300		**EP52AP** 143873	**EP52ORG** 143890	**EP52RG** 143903
	450		**EP53AP** 143874	**EP53ORG** 143891	**EP53RG** 143904
	600		**EP54AP** 143875	**EP54ORG** 143892	**EP54RG** 143905
	750		**EP55AP** 143876	**EP55ORG** 143893	**EP55RG** 143906

vt05410	vt06910	vt05810	vt06110
Installation on EP support frame / Mounting kit for modular devices / terminal blocks without access; intended to be used as hood or pan incl. DIN-rails 35x7.5 mm / (1 rail per 150 mm section)	Installation on EP support frame / Mounting kit for individual use and general fixing of devices; intended to be used as hood or pan incl. mounting plate and depth-adjustable brackets	Installation on EP support frame / Cover plate for busbar-mounted fuse base sizes D02, DII and DIII; intended to be used as pan; fitting unit is fed-in from the side 3-pole busbar system (60 mm) not incl.	Installation on EP support frame / Cover plate for busbar-mounted NH fuse switch-disconnector size NH000/NH00; intended to be used as pan; fitting unit is fed-in from the side 3-pole busbar system (60 mm) not incl.
EP5xRKxA (depth-adjustable)	EP5xMP(A) (non-perforated) EP5xMPL (micro-perforated)	EP5xGRC… (max. size 405 mm - vertical)	EP52GRT… (6x NH000)
RAL 9002 grey	RAL 9002 grey	RAL 9002 grey	RAL 9002 grey
Cat. No. per unit unit = 1 pc.	Cat. No. per unit unit = 1 pc.	Cat. No. per unit unit = 1 pc.	Cat. No. per unit unit = 1 pc.
EP51RK1 143913	**EP51MP** 143919		
EP52RK2 143914 **EP52RK2A** 193671	**EP52MP** 143920 **EP52MPA** 193661 **EP52MPL** 193658	**EP52GRC405-OG** 143944	**EP52GRT6000R-OG** 143948
EP53RK2 143915 **EP53RK3A** 193672	**EP53MP** 143921 **EP53MPA** 193662	**EP53GRC405-OG** 143946	-
-	-	-	-
-	-	-	-

Width [mm]	Height [mm]				
	(24 MU / row) incl. fastener kit/handles (cover plate holders are not part of delivery)				
		vt05710	vt05210	vt05310	vt06610
		Installation on EP support frame Mounting kit for NH fuse switch-disconnectors, frame size NH00 - NH2, up to 630 A, incl. mounting plate (if needed) R-variants are dedicated for busbar mounting, 3-pole busbar system (60 mm) not included intended to be used as pan;			
		EP52XNH004… (4x XNH00 3p) EP52XNH003… (3x XNH00 4p) RAL 9002 grey	EP53XNH11… (1x XNH1 4p) RAL 9002 grey	EP53XNH22… (2x XNH2 3p) RAL 9002 grey	EP53XNH31… (1x XNH3 3p) RAL 9002 grey
		Cat. No. per unit unit = 1 pc.	Cat. No. per unit unit = 1 pc.	Cat. No. per unit unit = 1 pc.	Cat. No. per unit unit = 1 pc.
EP installation system - standard modules					
500	150	**EP52XNH004-OG** 184529 **EP52XNH003-4-OG** 184531 **EP52XNH004R-OG** 184539	-	-	-
	300	-	**EP53XNH11-4-OG** 184533	**EP53XNH22-OG** 184535	**EP53XNH31-OG** 184536
	450	-	-	-	-
	600 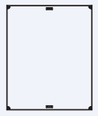	-	-	-	-
	750	-	-	-	-

	vt06510	vt05910	vt05610	vt06710	
	Installation on EP support frame / Mounting kit for NH In-line fuse switch-disconnector, frame size NH00-NH3, up to 630 A, intended to be used as pan; NH00: 3-pole busbar system (100 mm) NH1-3: 3-pole busbar system (185 mm)	Installation on EP support frame Mounting kit for switch-disconnector, type Dumeco, 3-/4-pole, up to 1600 A,; intended to be used as pan;	Installation on EP support frame / Mounting kit for fuse switch-disconnector, type QSA, 3-/4-pole, / up to 630 A, intended to be used as hood;	Installation on EP support frame / Mounting kit for Moulded Case Circuit Breaker (MCCB), / type NZM, 3-/4-pole, up to 1600 A, incl. mounting plate / K-variants are dedicated for toggle operation, / R-variants for rotary door handle / direct swing handle / intended to be used as hood or pan;	
	EP54GTL… (9x NH00, Cu 30x5 mm) EP55GTL4… (4x NH1-3, Cu 40x10-100x10 mm) EP55GTL3… (3x NH1-3, Cu 2x30x10 mm) RAL 9002 grey	EP53GLD630… (1x DMV630/DMV1000) EP53GLD125… (1x DMV1250/DMV1600) RAL 9002 grey	EP52QSA… (1x QSA250/QSA400) EP53QSA… (1x QSA630) RAL 9002 grey	EP55NZM4… (1x NZM4-A1600) RAL 9002 grey	
	Cat. No. per unit unit = 1 pc.	Cat. No. per unit unit = 1 pc.	Cat. No. per unit unit = 1 pc.	Cat. No. per unit unit = 1 pc.	
	-	-	**EP52QSA250/400-OG** 143973	-	-
		EP53GLD630/1000-OG 143970 **EP53GLD1250/1600-OG** 143971	**EP53QSA630-OG** 143974	-	-
	EP54GTL900-OG 143950	-	-	-	-
	EP55GTL4-OG 143955 **EP55GTL3-OG** 193674	-	-	**EP55NZM4K-OG** 143979 **EP55NZM4R-OG** 143980	-
	EP25AP-GTL *) 180442 *) width 250 mm / feeding unit for NH In-line fuse switch-disconnector module EP55GTL4-OG	-	-	-	-

xEnergy Distribution Boards

EP installation system - standard modules / mounting kits, width 750 mm

Width [mm]	Height [mm]	vt06310	vt06410	vt05510
(36 MU / row) incl. fastener kit/handles (cover plate holders are not part of delivery)		Installation on EP support frame Cover plate for individual use; intended to be used as hood or pan RAL 9002 grey	Installation on EP support frame Cover plate for modular devices and related components; / intended to be used as hood or pan RAL 9002 grey	Installation on EP support frame Mounting kit for modular devices and related components; intended to be used as pan incl. DIN-rails 35x7.5 mm (1 rail per 150 mm section) RAL 9002 grey
		Cat. No. per unit unit = 1 pc.	Cat. No. per unit unit = 1 pc.	Cat. No. per unit unit = 1 pc.
EP installation system - standard modules				
750	150	**EP71AP** 143877		
	300	**EP72AP** 143878	**EP72ORG** 143894	**EP72RG** 143907
	450	**EP73AP** 143879	**EP73ORG** 143895	**EP73RG** 143908
	600 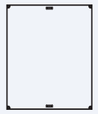	**EP74AP** 143880	**EP74ORG** 143896	**EP74RG** 143909
	750	**EP75AP** 143881	-	-

xEnergy Distribution Boards

EP installation system - standard modules / mounting kits, width 750 mm

VT06510
Installation on EP support frame Mounting kit for NH In-line fuse switch-disconnector, frame size NH00-NH3, up to 630 A, intended to be used as pan; / NH00: 3-pole busbar system (100 mm) NH1-3: 3-pole busbar system (185mm) EP74GTL… (14x NH00, Cu 30x10 mm) EP75GTL7… (7x NH1-3, Cu 40x10-100x10 mm) EP75GTL6… (6x NH1-3, Cu 2x30x10 mm) RAL 9002 grey
Cat. No. per unit unit = 1 pc.
-
-
-
EP74GTL1400-OG 143951
EP75GTL7-OG 143956 **EP75GTL6-OG** 193675 **EP25AP-GTL *)** 180442 *) width 250 mm / feeding unit for NH In-line fuse switch-disconnector module EP75GTL7-OG

Set-up and mounting of a standard-section fitting-system, type EP

Type designation

Assembly group variants for:

AP	Cover plate, closed design
RG	Devices for modular installation with DIN support rail
ORG	Devices for modular installation without DIN support rail
RK	Block terminals
MP	Mounting plate
GRT	NH fuse load disconnector NH000
GRT_R	NH fuse load disconnector NH000 (busbar mounting)
XNH	NH fuse load disconnector NH00-NH3
XNH_R	NH fuse load disconnector NH00-NH3 (busbar mounting)
GRC	Device, busbar-mounted distribution board system Type **C**
GRC_N	Version D02 (**n**eozed)
GRC_NV	Version D02 (**n**eozed), **v**ertically arranged
GRC_V	Version DII / DIII, **v**ertically arranged
GRC_LD	Version load disconnector for **D**-fuses
GRC_OG	Version without device
GTL	Device, NH **in-line fuse switch-disconnector**
GTL_OG	Version without device
GLD	Device, load disconnector **D**umeco series
QSA	Load disconnector for NH fuses type **QSA**
QSA_TK	Version door coupling
GE	Circuit breaker series **G** size **E**
Z	Meter
WT	Bracket rest for door wiring

Sizes / Rated current ranges

00	Size 00 / 160 A
1	Size 1 / 250 A
2	Size 2 / 400 A
3	Size 3 / 630 A

Example of types:

EP 2 1 AP
- AP: Cover plate
- 1: Height of modules 1x150 mm = 150 mm
- 2: Width of modules 250 mm
- EP: Standard-section EP fitting-kits

EP 5 4 GTL 9 00 - OG
- OG: Without device
- 00: Size 00, rated current 160 A
- 9: 9 circuits
- GTL: NH in-line fuse switch-disconnector
- 4: Height of modules 4x150 mm = 600 mm
- 5: Width of modules 2x250 mm = 500 mm
- EP: Standard-section EP fitting-kits

EP 2 2 GRC 6 162 - OG
- OG: Without device
- 162: 63 A, D02
- 6: 6 circuits
- GRC: Device, busbar-mounted distribution system
- 2: Height of modules 2x150 mm = 300 mm
- 2: Width of modules 250
- EP: Standard-section EP fitting-kits

EP 5 2 XNH 00 4 - OG
- OG: Without device
- 4: 4 circuits
- 00: Size 00, rated current 160 A
- XNH: Device NH fuse switch disconnector
- 2: Height of modules 2x150 mm = 300 mm
- 5: Width of modules 500 mm
- EP: Standard-section EP fitting-kits

Technical features, standard-section fitting-system type EP

Application

As a standard-section fitting-system for use as a switchgear assembly in cabinet systems EWS/EWP, BPM-F, xE Main / Light

Standards and regulations

The system conforms to IEC/EN 61439-1/2

Construction for fixing standard-section fitting-kits

Basis for fixing the standard-section fitting-kits are the support profiles. Standard-section fitting-kits with electrical switchgear are mounted on these support profi-es. This complete unit is protected by an electric shock protection cover plate.

Support elements for fixing standard-section fitting-kits

Basis of the internal framework in the type EWS/EWP, BPM-F, xE Main / Light system are the vertical (type EPTV) and horizontal (type EPTH) support profiles. These support profiles are fixed to each other by means of a "Support rail connec-tor" which provides for a reliable and stable construction.

The support profile is designed with a 25 mm high fold, set up in a grid pattern of 250x150 mm according to DIN 43870, part 2, for accommodating mounting plates and support elements.

Material and coverings

Support profile: 25 mm high,, 16 mm wide
2 mm sheet steel
Cover plate: Polystyrene, shock-resistant according to VDE 0304
low inflammability, self-extinguishing

Standard-section fitting-kits type-coding

The following main groups are available:

– Modules for modular installation devices	EP_RG
– Modules for block terminals	EP_RK_
– Modules with mounting plate	EP_MP
– NH fuse load disconnector modules	EP_XNH_
– NH In-line fuse switch-disconnector modules	EP_GTL_
– Modules with D-fuse elements	EP_GRC_
– Modules with Dumeco load disconnector	EP_GLD_
– Modules with load disconnectors using fuses type QSA	EP_QSA
– Modules for NZM compact circuit breakers	EP_NZM

Colour

– Cover plate: RAL 9002 - grey-white
– Handle: RAL 7024 - graphite-grey

Standard-section fitting module dimensions

Support profiles are set up in a grid pattern of 250x150 mm.
Width: 250 mm
Height: 150, 300, 450, 600, 750 mm
Width: 500 mm
Height: 150, 300, 450, 600, 750 mm
Width: 750 mm
Height: 150, 300, 450, 600, 750 mm

Delivery

The package contains all parts (cover plate and quick-fixing included) to be mount-ed on the support profile. Electric shock protection cover plates can be fixed one or the other way round and can therefore be used as a pan or as a hood.
Standard-section fitting-kits are delivered complete with handles and captive snap-in tool-type closures for quick fixing. Cover plate holders need to be ordered separately.

Device cover plates can be used one or the other way round to increase the instal-lation depth. Manual opening is impossible. A sealing for each cover plate is avail-able as an option.

Completely packed in a cardboard box ex-factory with clearly legible product des-ignation.

Product features of standard-section fitting-system, Type EP

Standard-section fitting-kits have the following technical characteristics:

- High stability thanks to the use of a 25 mm high U-fold profile support rail
- Dynamic resistance thanks to support rail connectors made of zinc diecast
- Flexible when it comes to the set-up of both plain and complexe cabinet distribution boards
- Easy to install as there are only few system parts
- Pleasant design with calm, warm colours
- Rational planning and project development
- Standard-section fitting-kits can be used in the entire Eaton distribution board range, except in type EWK

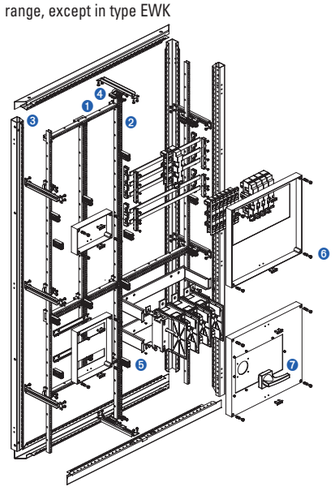

1. Support rail, horizontal, type EPTH_
Support rail, horizontal, with the same profiling as the vertical support rail.

2. Support rail, vertical, type EPTV
Support rail, vertical with high dynamic resistance thanks to a 25 mm high fold, also suitable for mounting heavy switchgear.

3. Cabinet connector, type XVTL-SV
A zinc diecast component for connecting the hrizontal and/or vertical support rails with the cabinet, depth-adjustable in a 12.5 mm grid pattern according to DIN 43660.

Cabinet connectors for other distribution board systems are:
BP(M)-0/BPM-F Type BPZ-TW
xE Light: Type XVTL-SV

4. Support rail connector, type EPTV_
A zinc diecast component for connecting the horizontal and/or vertical support rails with each other in a grid pattern WxH = 250x150 mm.

5. Cover plate holders, type APH_
Cover plate holders for fixing the electric shock protection cover. Designed as double-holders (Type APH) to reduce the number of individual parts. Also available as single holders (Type APH05). The cover plate holder provides for stable screw-fixing of the cover plates on a horizontal or vertical support rail.

6. Tool-type closure, type APZB
For quick fixing of the electric shock protection cover. Locking through a 90° turn. Lead sealing at a later point in time is possible with all covers.

7. Cover plate handle, type APZB
Beautiful and handy design for better handleing of the electric shock protection covers.

System set-up of a standard-section fitting-system, Type EP

System support rails
The standard delivery of a cabinet of the series BP(M)-O, BPM-F, xE Light prepared for a standard-section fitting-system is variable (see delivery details). A left and right side system support rail of type EPTV are the basis for the further inside equipment with vertical and horizontal support rails (Fig. 1).

Additional mounting of a horizontal support rail (type EPTH) and a vertical support rail (type EPTV) provide the framework for further inside equipment with standard-section fitting-kits of type EP (see Fig. 2).

Finish of floor-standing cabinet system - type BPM-F
Floor-standing cabinets BPM-F come equipped with a mounting kit (type BPZ-TW) on the left/right top and bottom, including a left and right support rail of type EPTV1950A-BP and EPTV1800 respectively.

Finish of floor-standing cabinet system - type xE Light
Cabinet system xE Light come equipped with the left/right mounted support rails EPTV1800-XVTL in combination with the depth fitting kits for stability purposes (XVTL-TE).

Depth fitting kits
For even more stability with xE Light you can also retrofit additional depth fitting kits (type XVTL-TE) on the framework.

All cabinets come equipped with an all-around electric shock protection and provide the required protection of people in the combination of assembly groups and cabinet housing.

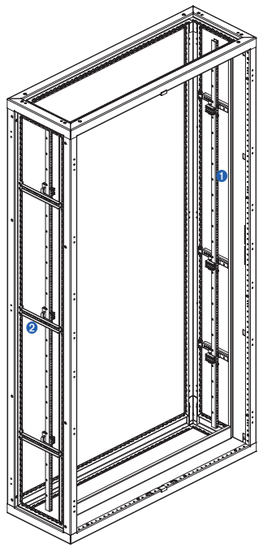

Fig. 1: Standard delivery of disbribution board cabinet type xE Light with left and right mounted support profiles.
1) Vertical support profile. 2) Depth fitting kits.

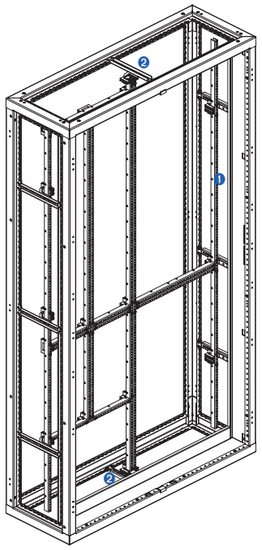

Fig. 2: Distribution board cabinet type xE Light with inside support framework thanks to support profiles for using and fixing standard-section fitting-kits type EP.
1) Vertical support profi le. 2) Depth fitting kits.

System description of the standard-section EP fitting-system

The inside equipment with further horizontal and vertical support rails of type EPTH and EPTV depends on well-considered planning and project development regarding the system assembly groups. Subsequently you will find an example of the framework for a low-voltage distribution board.

Support rails and depth fitting kit (Fig. 1 and 2)
For optimal equipment of an xE Light cabinet framework it is reasonable to use as many vertical support rails of type EPTV1800A-XVTL as possible. They need to be fixed at the top and bottom of the depth fitting kit type XVTL-TE. This means that the support rails are directly fixed at the framework which in turn increases the load-bearing capacity of the framework and is especially favourable for installing heavy system assembly groups or devices.

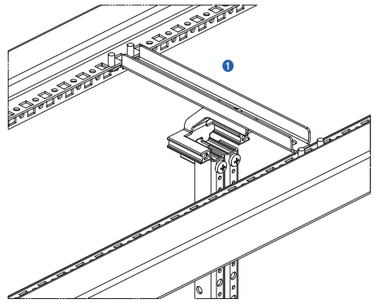

Fig. 1: Depth fitting kit type XVTL-TE - installation at the top
1) Depth fitting kit

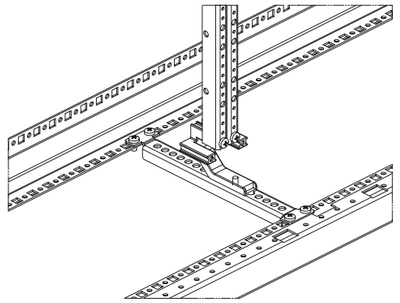

Fig. 2: Depth fitting kit type XVTL-TE - installation at the bottom

Note: If inside a cabinet, as shown in Fig. 1/2, two outer vertical support rails of type EPTV1800A-XVTL are used, you can only use halfs of the cover plate holders (type APH05) on each top/bottom end of the support rails to set up the assembly groups. However, if you use inside support rails, you can mount an additional EPTV65 horizontally underneath the two vertical support rails to accommodate a cover plate holder of type APH.

Support rail connector (Fig. 3 and 4)

You need to use the support rail connector for connecting horizontal and vertical support rails with each other. The zinc diecast component is extremely stable and provides a high level of dynamic resistance to the connection.

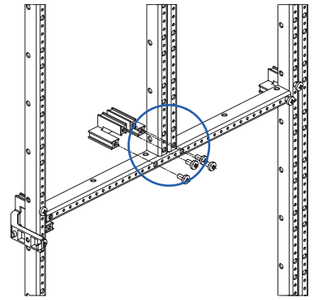

Fig. 3: Support rail connector (type EPTV) - for horizontal installation

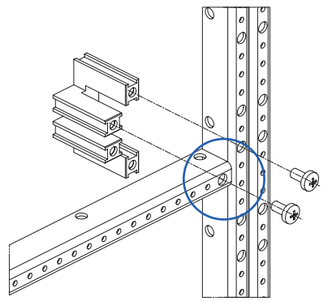

Fig. 4: Support rail connector (type EPTV) - for vertical installation

Support rail connector - half (Fig. 5)

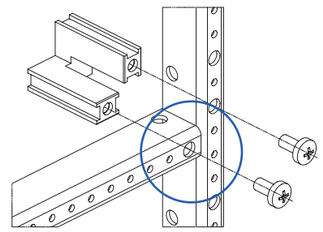

Fig. 5: Support rail connector half (type EPTV05) - for vertical installation

System description of the standard-section fitting-system, type EP

On the inner side of the system support framework you can fix different electrical equipment using different mounting elements such as DIN prof le support rails, device carrier plates, meter plates, busbar system etc., depending on the project design and on the required equipment (see Fig. 1).

Thanks to the predetermined fixing grid of vh = 75 mm according to DIN 43660, the vertical support rails (type EPTV) allow for a variable set-up of the electrical equipment and the corresponding mounting elements.
For this purpose and with the aid of the corresponding building instructions, the mounting elements are directly mounted on these vertical system support rails (type EPTV).

The cover plate holder is designed as a double holder (type APH or APHL) and is screwed onto the horizontal and vertical system support rails in a grid pattern of 250x150 mm. In the respective cabinet corners you have to use halfs of the cover plate holders (type APH05 or APHL05).
The electric shock protection cover can simply be fixed using a tool-type closure as a quick fastener through a 90° turn on the cover plate holder.
The complete cabinet system equipped with assembly groups is interconnected with the electrical shock protection running all around the cabinet, it is therefore fully protected against electric shock and offers best operator protection (Fig. 2).

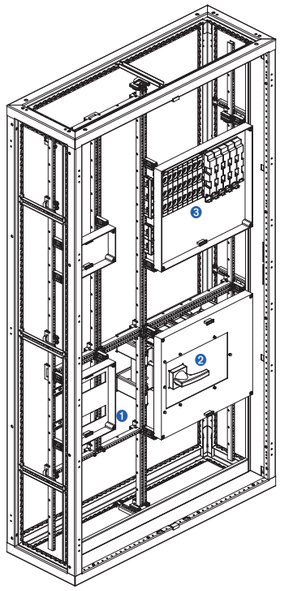

Fig. 1: Cabinet distribution board, partly equipped with standard-section EP fitting-kits
1) Fitting module type EP for DIN-modular components
2) Fitting module type EP for Dumeco load disconnector
3) Fitting module type EP for busbar-mounting fuse

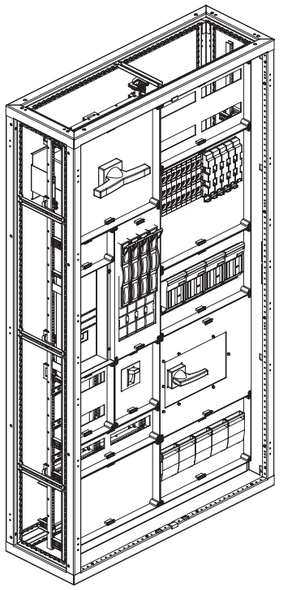

Fig. 2: Cabinet distribution board, fully equipped with the fitting module type EP

Set-up and mounting of a standard-section fitting-system, type EP

Electric shock protection cover plate
Electric shock protection cover plates can be inversed, so they provide for a different mounting level regarding depth:

- as a pan (Fig. 1) 40 mm top edge system support rail 55 mm
- or mounted as a hood (Fig. 2) 93.5 mm top edge system support rail

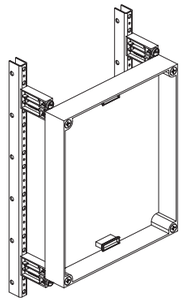

Fig. 1: Electric shock protection used as a pan

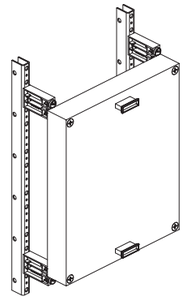

Fig. 2: Electric shock protection used as a hood

DIN support rails (Fig. 3)
Mounting of built-in installation devices according to DIN 43880, e.g. miniature circuit breakers, D0 and D fuse elements, timers, disconnectors, remote switches, contactors etc. with quick fastening on support rail 35x7.5 mm similar to DIN EN 60715.
Depending on the section they rest on, support rails are screwed onto the vertical support rails (type EPTV) using self-tapping screws.

Usually the fitting height between device support rails and device cover is 45 mm, suffient for all built-in devices with a frame size of 45 mm. In this case the electric shock protection cover plate is mounted as a pan.

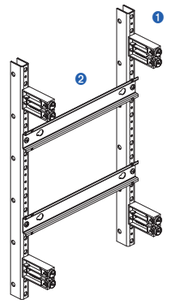

Fig. 3: Fixing of DIN support rails when using the electric shock protection cover plate as a pan
1) Cover plate holder 2) DIN support rail

Set-up bracket for DIN support rails (Fig. 4 and 5)
If you use set-up brackets (type EPAW_TS) you can increase the level of the device support rail by 40 mm. In this case the electric shock protection cover plate is mounted as a hood, so the clearance between the device support rail and the device cover is 45 mm again.

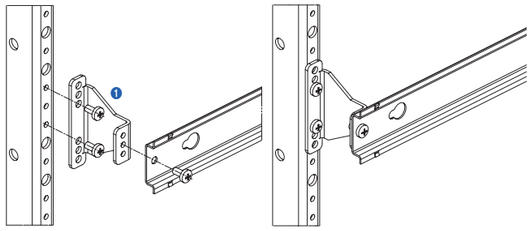

Fig. 4/5: Principle of DIN support rails combined with a set-up bracket and cover plate as a hood
1) Set-up bracket

Drop-down shackle (Fig. 6 and 7)
Thanks to the drop-down shackle (type EPAB-TSMP) the mounting level of the device support rail (and of the mounting plates) can be reduced to 60 mm in steps of 12 mm from the top edge of the system mounting frame (system support rail).

In this case the electric shock protection cover plate is used as a hood so as to increase the fitting depth.

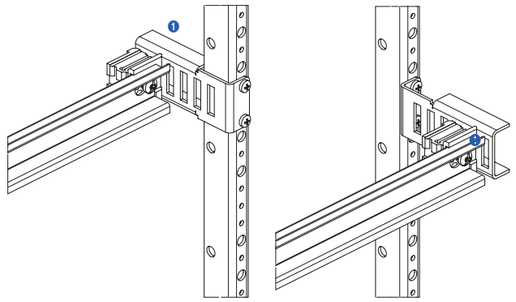

Fig. 6/7: DIN support rails can be brought down in steps of 12 mm
1) Set of drop-down shackles

Mounting plate with drop-down shackle (Fig. 8)
Used for fitting the devices through screw-fastening, such as switchgear, protective assemblies, regulators, converters and other devices. Where depth-adjustable drop-down shackles are used together with standard mounting plates, it is no problem to install switchgear, contactors or other depth-installed devices in steps of 12 mm down to 67.5 mm from the top edge of the system support rail.

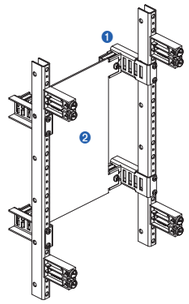

Fig. 8: Mounting plate with a set of drop-down shackles
1) Set of drop-down shackles 2) Mounting plate

Set-up and mounting of a standard-section fitting-system, type EP

Selection of the required low-voltage cabinet system

For selecting the right cabinet system the following aspects need to be considered:

- System assembly group and device inserts?
- Electric shock protection covers required?
- How can they be combined in the switchboard cabinet to be selected?

You also need to take into account:

1. Total volume of the built-in components and device inserts to be used
2. Rated current of the busbar system in case you plan to install one
3. Type of placement - either as a
   – Wall-mounted cabinet distribution board or as a
   – Floor-standing cabinet distribution board, stand-alone

Depending on the above criteria and using the selection tables and the overview of predefined variants, you can find out and determine the suitable solution for the set-up or combination of the device fitting kits and the appropriate electric shock protection covers for the switchboard cabinet system.

Once this has been done, you will know the required number and the arrangement of the support rails; the same applies to the size of the individual switchgear system assembly groups and their device covers.

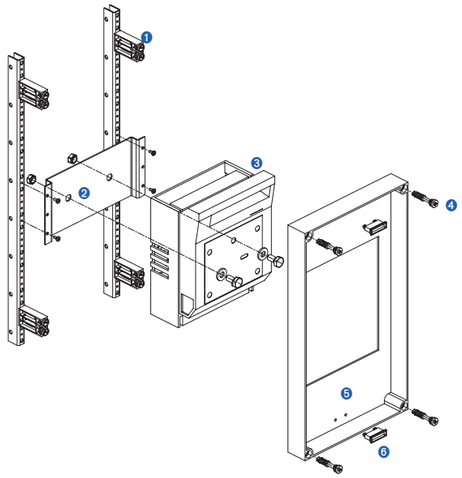

Fig. 1: Standard-section fitting-kits type EP with NH in-line fuse switch-disconnector mounted on a device carrier plate

1) Cover plate holder
2) Prepared device carrier plate
3) NH fuse load disconnector
4) Quick fastener
5) Cover plate
6) Handle

Set-up and mounting of the fusebox on the busbar system

With fuseboxes in horizontal and vertical design, the busbar supports are fixed directly and immediately or between two vertical system support rails (type EPTV). The 20x5 mm copper current rails are positioned from the front and fixed on the upper part of the support.

The 3-pole busbar-mounting fuse bases are placed on these copper current rails from the front and locked in place with a fastening screw.

The individual strip covers can only be removed after the central electric shock protection cover has been taken off.

The electric shock protection and switchgear covers comprise the captive snap-on tool-type quick closures for quick fastening.

"Manual opening" is impossible.

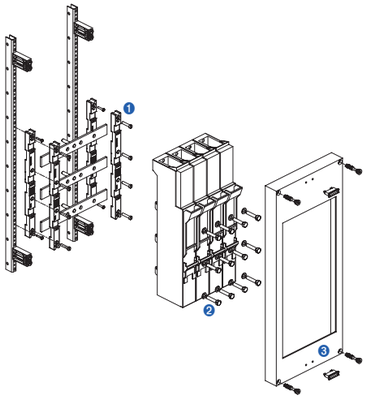

Fig. 2: Standard-section fitting-kits with NH in-line fuse switch-disconnector, 3 poles, vertically mounted on the busbar support. Center-to-center distance between the phases is 100 mm, with Cu busbar system 30x5 or 30x10 mm

1) Special rail support
2) Terminals
3) Cover plate

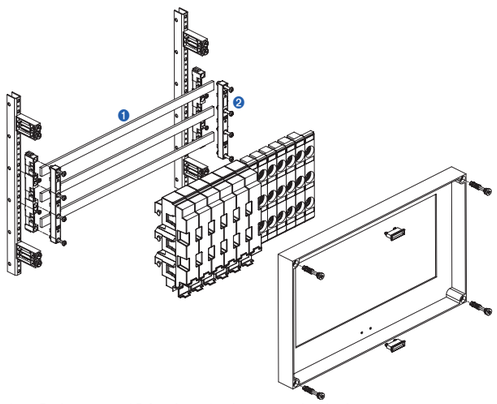

Fig. 3: Busbar-mounted D fuse base, 3 poles, mounted on busbar support. Center-to-center distance between the phases is 60 mm, with Cu busbar system 20x5 or 30x10 mm
1) Busbar system
2) Rail support

Material: Polystyrene, shock-resistant, self-extinguishing
Colour: RAL9002 (grey-white)
The snap-on handles as a mounting aid are also included in the scope of delivery.
Self-adhesive transparent pockets for frontal placement of labelling strips at a later point in time can be provided as an option.

193170_LDO, 293313_LDO, 501316_LDO1

Distribution Boards

Distribution Boards

- **Chapter 0**
  Table of Contents ..... Page 3
- **Chapter 1**
  Field distribution boards protection class II ..... Page 4
  1.1 Surface-mounted field distribution board EWK-G.., IP31 ..... Page 5
- **Chapter 2**
  Enclosures / switchgear cabinets for installation system EP in protection class I and II ..... Page 10
  2.1 Surface-mounted and floor-standing distribution board EMC2-H.../55-W, IP55 ..... Page 11
  2.2 Surface-mounted distribution board BP-0-...-EP-W, IP31 ..... Page 20
  2.3 Surface-mounted distribution board BPM-0-...-EP, IP55 ..... Page 26
  2.4 Floor-standing distribution board BPM-F-...-EP, IP55 ..... Page 29
- **Chapter 3**
  EP installation system - standard modules / mounting kits ..... Page 34
  3.1 EP installation system - standard modules / Fitting-kits, Width 250 mm ..... Page 36
  3.2 EP installation system - standard modules / Fitting-kits, Width 500 mm ..... Page 40
  3.3 EP installation system - standard modules / Fitting-kits, Width 750 mm ..... Page 44
  3.4 EP installation system - standard modules / Fitting-kits, Technical data ..... Page 46
- **Chapter 4**
  EP installation system - general accessories ..... Page 53
- **Chapter 5**
  Enclosures / switchgear cabinets for installation system ProfiSNAP ..... Page 66
  5.1 Surface-mounted distribution board BP-0-..., IP30 (pre-assembled) ..... Page 67
  5.2 Surface-mounted distribution board BP-0-..., IP30 (flat-pack, grey) ..... Page 72
  5.3 Surface-mounted distribution board BP-0-..., IP30 (flat-pack, white) ..... Page 74
  5.4 Surface-mounted distribution board BPM-0-..., IP55 ..... Page 95
  5.5 Flush-mounted distribution board BP(A/M)-U-3S-..., IP30/IP43/IP54 ..... Page 105
  5.6 Floor-standing distribution board BP-F-..., IP30 ..... Page 119
  5.7 Outdoor distribution board BP-VF/DZ..., IP44 ..... Page 130
  5.8 Floor-standing distribution board BPM-F-..., IP55 ..... Page 137
  5.9 Shared compartments inside distribution boards BP(M)-0, BP(M)-F ..... Page 149
- **Chapter 6**
  ProfiSNAP installation system - components for interior fitting ..... Page 154
  6.1 Front plates, blind and with 45mm cut-out for DIN-rail devices ..... Page 156
  6.2 Mounting kits for Moulded Case Circuit Breaker ..... Page 164
  6.3 Mounting kits for Fuse Switch Disconnectors ..... Page 182
  6.4 Mounting kits for BZM, Dumeco and QSA ..... Page 188
  6.5 Mounting kits for Earthing and Neutral conductors ..... Page 189
  6.6 Mounting plates for universal fixing of different components ..... Page 192
  6.7 Mounting kits for Energy Meters and various metering equipment ..... Page 200
- **Chapter 7**
  ProfiSNAP installation system - general accessories ..... Page 207
- **Chapter 8**
  General accessories xEnergy Basic ..... Page 228
- **Chapter 9**
  Overall technical data xEnergy Basic ..... Page 248
- **Chapter 10**
  Verification of temperature rise by testing - selection of reference examples ..... Page 253

Meter Carrier Plate

- To accomodate intra-company meter equipment for AC and three-phase current
- Installation depth for meters - max. 175 mm

vt03418, vt03318

Width x Height (mm)	Description	Type Designation	Cat. No.	Units per package
250 x 450	single	EP23Z1-ZBR	193690	1
250 x 750	double	EP25Z2-ZBR	193691	1

Mounting Plate

- Can be used in connection with universal drop-down brackets
- Material: Sheet steel 2.0 mm, galvanized
- Incorporation of energy meter modules is possible as of EPMP51
- Incorporation of terminal boxes is possible

vt08310

204 x 115	EPMP21	143987	1
204 x 240	EPMP22	143988	1
204 x 240	EPMP22	143988	1
454 x 115	EPMP51	143990	1
454 x 240	EPMP52	143991	1
454 x 390	EPMP53	143992	1

Vertical Profile, Square Hole Pattern 9.5 x 9.5 mm included

- Left and right vertical profile to accommodate EP modules
- Also suitable for interior set-up, if the entire section height is used or if subdivisions are incorporated, you need to use EPTV....
- For cabinet types BPM-F, xE Light

vt07810

Height (mm)	Cabinet Type	Type Designation	Cat. No.	Units per package
1765	BPM-F, xE Light	EPTV1800A-XVTL	143797	1
1915	BPM-F	EPTV1950A-BP	143850	1

Support Rail Vertical, Square Hole Pattern 9.5 x 9.5 mm included

- For vertical interior set-up in cabinet types BP-O, BPM-O, BPM-F, xE Light
- To accommodate EP modules

vt07810

65	EPTV65	143837	1
115	EPTV150	143838	1
265	EPTV300	143839	1
415	EPTV450	143840	1
565	EPTV600	143841	1
715	EPTV750	143842	1
865	EPTV900	143843	1
1015	EPTV1050	143844	1
1165	EPTV1200	143845	1
1315	EPTV1350	143846	1
1465	EPTV1500	143847	1
1615	EPTV1650	143848	1
1765	EPTV1800	143849	1

Support Rail Horizontal, Square Hole Pattern 9.5 x 9.5 mm included

- For horizontal interior set-up in cabinet types BP(M)-O, BPM-F, xE Main / Light
- With holes for mounting the devices, mounting rails and assembly groups

vt07710

Depth (mm)	Cabinet Type	Type Designation	Cat. No.	Units per package
215		EPTH250	143851	1
465		EPTH500	143852	1
715		EPTH750	143853	1
965		EPTH1000	143854	1
1215		EPTH1250	143855	1

Support Rail Horizontal, Double Version

- For horizontal interior set-up in cabinet types BP(M)-O, BPM-F, xE Main / Light
- With holes for mounting the devices, mounting rails and assembly groups

vt07610

465	EPTH500D	143856	1
715	EPTH750D	143857	1
965	EPTH1000D	143858	1
965	EPTH1000D	143858	1

Depth Support Rail

- For mounting cabinet connectors or fitting bracket types WEQV, WMPO, XVTL-EW

vt08010

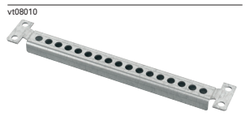

300	xE Light	XVTL-TT300	143825	1
400	xE Light	XVTL-TT400	143826	1
600	xE Main / Light	XVTL-TT600	143828	1
800	xE Main / Light	XVTL-TT800	143829	1

Depth Fitting Kit

- For fixing the vertical and horizontal support rail types EPTV and EPTH
- Fastening material included
- 1 package = 2 units
- Depth support rail and cabinet connector

vt08210

300	xE Light	XVTL-TW300	500613	1
400	xE Light	XVTL-TW400	500614	1
600	xE Main / Light	XVTL-TW600	500615	1
800	xE Main / Light	XVTL-TW800	501299	1

Cabinet Connector

- Fixed on depth support rails for mounting the vertical and horizontal support rail types EPTV and EPTH

vt08410

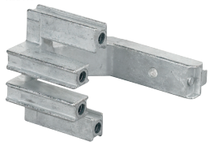

Depth (mm)	Cabinet Type	Type Designation	Cat. No.	Units per package
	xE Main / Light	XVTL-SV	143834	1
	xE Main / Light width 425 mm	XVTL-SV425	143836	1
in combination with XVTL-TW	xE Main / Light	XVTL-AW	500617	1
in combination with XVTL-TW	xE Main / Light width 425 mm	XVTL-AW425	500616	1

Support Rail Bracket

- For mounting the vertical support rail type EPTV
- Fastening material included
- 1 package = 2 units

vt08710

250/400	BPM-F	BPZ-TW	143864	1
250/270	BP-O/BPM-O			

Add-on connection kit

- For a proper arrangement (side-by-side) of two or more cabinets taking into account of degree of protection
- Screws, washers and sealing tape included
- 1 set is needed for each connection

vt05018, vt05118

400	BPM-F	BPZ-AC55-F	193653	1
250/270	BP-O/BPM-O	BPZ-AC55-O	193654	1

Support Rail Connector

- For fixing the vertical and horizontal support rails
  Type EPTV (4 fixing screws included in the Delivered as)
  Type EPTV-E (no fixing screws included in the Delivered as)

vt08510

Description	Type Designation	Cat. No.	Units per package
	EPTV	143860	1
	EPTV-E	143861	1

Support Bracket Connector, Half Version

- For fixing the vertical and horizontal support rails
  Type EPTV05 (2 fixing screws included in the Delivered as)
  Type EPTV05-E (no fixing screws included in the Delivered as)

vt08610

	EPTV05	143862	1
	EPTV05-E	143863	1

Universal Bracket

- For fixing horizontal support elements

vt08910

	WEQV	143993	10

Special Bracket

- For fixing horizontal support elements

vt09010

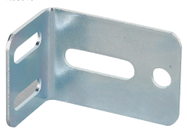

	WMPO	143994	10

Description	Type Designation	Cat. No.	Units per package

Drop-down Shackle for Support Rails and Mounting Plates

- For reducing the mounting level in steps of 12 mm down to a max. of 60 mm from the top edge of the system support rail
- Fastening material included
- 1 package = 2 units

vt11010

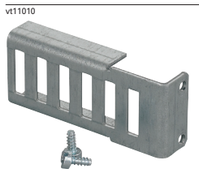

EPAB-TSMP	143985	1

Fixing bracket for distribution busbar BPZ-KB-xx/250

- Horizontal arrangement of the distribution busbar, supply from top/bottom via connection lugs
- Especially designed to fit between two DIN-rails of 150 mm distance
- 1 package = 2 units

vt04718, vt04818

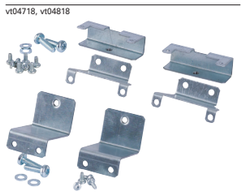

compatible with BPZ-KB-12/250, distance between EPTV 250 mm	EPBR-KB12	193688	1
compatible with BPZ-KB-24/250, distance between EPTV 500 mm	EPBR-KB24	193689	1

Fitting Bracket

- For fixing support elements such as EPTV support rails or horizontal type EPTH support rails
- As double and EPTHD type

vt08810

XVTL-EW	143995	10

Cover Plate Holder, as Double Tower, Standard Version

- Double tower version with fixing screw
- For fixing the electric shock protection cover plate

vt10710

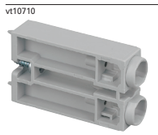

APH	143981	20

Cover Plate Holder, as Double Tower, High Version

- Double tower version with fixing screw
- 7.5 mm higher allowing to use the 15 mm high support rails (type EPTS15)
- For fixing the electric shock protection cover plate

vt10610

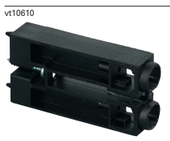

APHL	143982	10

Description	Height (mm)	Type Designation	Cat. No.	Units per package

Cover Plate Holder, Half, Standard Version

- Single tower version with fixing screw
- For fixing the electric shock protection cover plate
- For use in the 4 cabinet corners

vt10910

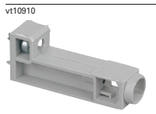

	APH05	143983	20

Cover Plate Holder, Half, High Version

- Single tower version with fixing screw
- 7.5 mm higher to allow using the 15 mm high support rails (type EPTS15)
- For fixing the electric shock protection cover plate
- For use in the 4 cabinet corners

vt10810

	APHL05	143984	10

Insulation Piece

- For insulated mounting of DIN support rails on the support framework
- Screws included
- 1 package = 2 units

vt57016

UI-TS	144022	1

Raising Bracket for Support Rail

- For increasing the mounting level by 40 mm from the top edge of the system support rail type EPTH
- Fastening material included
- 1 package = 2 units

vt10210

For DIN Support Rail	35 x 7.5 mm	EPAW-TS	143986	1
	35 x 15 mm	EPAW-TS15	172759	1

Spacer Pins

- For the set-up of DIN support rails and cable strain relief rails on a higher level
- Hexagonal shape, thread M4

vt10410

35	AB30	144023	1
55	AB60	144024	1

Tool-type Quick-acting Closure Handle

- Set of 4 units of tool-type quick-acting closures and 2 handles

vt10010

Description	Length (mm)	Type Designation	Cat. No.	Units per package
		APZB	144025	1

Tool-type Quick-acting Closure with Sealing Cap

- For diagonal sealing of a cover plate
- 1 package = 2 units

vt10110

Description	Length (mm)	Type Designation	Cat. No.	Units per package
		APWSVP	144026	1

M4 Insertable Anchor

- M4 x 16 mm screw type EPLHS-M4X16 is included
- 1 package = 4 units

vt10310

Description	Length (mm)	Type Designation	Cat. No.	Units per package
		EPGE4	144027	1

Support Rail 35 x 7.5 mm, Square Hole Pattern 9.5 x 9.5 mm included

- Similar to DIN EN 60715, used as a support rail for block terminals and installation built-in devices for snap-on fixing

vt07310

Description	Length (mm)	Type Designation	Cat. No.	Units per package
	250	EPTS7-0250	143996	1
	500	EPTS7-0500	143997	1
	750	EPTS7-0750	143998	1
	1000	EPTS7-1000	143999	1
	1250	EPTS7-1250	144000	1

Support Rail 35 x 15 mm, Square Hole Pattern 9.5 x 9.5 mm included

- Similar to DIN EN 60715, used as a support rail for block terminals and installation built-in devices for snap-on fixing

vt07310

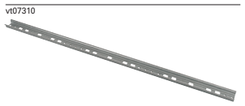

Description	Length (mm)	Type Designation	Cat. No.	Units per package
	250	EPTS15-0250	144001	1
	500	EPTS15-0500	144002	1
	750	EPTS15-0750	144003	1
	1000	EPTS15-1000	144004	1
	1250	EPTS15-1250	144005	1

Cable Interconnect Shackle

- For flexible and orderly guidance of cables and conductors

vt09310

Description	Length (mm)	Type Designation	Cat. No.	Units per package
	35 x 75	UKBUE35.75	144013	50
	65 x 185	UKBUE65.185	144014	20

Cable routing shackle

- Used for square hole pattern 9.5 x 9.5 mm

vt09410, vt04918

Description	Width x Depth (mm)	Type Designation	Cat. No.	Units per package
	35 x 75	EPCL095-75x75	193687	10

Blanking Strips

- To cover 45 mm non-equipped space units
- Grid pattern 9 mm

wa_vt07313, vt113414

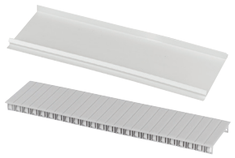

Description	Length (mm)	Type Designation	Cat. No.	Units per package
closed, white	1000	NBP-1000-W	275413	1
gray, rough-ribbed, 12 MU	216	BS-12MB-GY	178979	10/100

Blanking Strips, 60 mm system

- To blank off unused spaces
- RAL 7035
- Detachable in increments of 9 mm

vt00219

For use with	Width x Height [mm]	Type Designation	Cat. No.	Units per package
EPxxGRC... EPxxGRT... EPxxXNH00...	56 x 198	BS-S60-CI/EP	194590	10

Blanking Strips, 100 mm system

- Material: PVC 2.5 mm
- RAL 7035

vt00219 Symbolphoto

For use with	Width x Height [mm]	Type Designation	Cat. No.	Units per package
EPxxGTLx00-OG	50 x 429	EPCOVER50-P100-JM	155453	1
EPxxGTLx00-OG	100 x 429	EPCOVER100-P100-JM	155454	1

Blanking Strips, 185 mm system

- Material: PVC 2.5 mm
- RAL 7035

vt00219 Symbolphoto

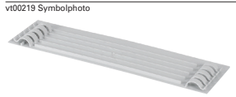

For use with	Width x Height [mm]	Type Designation	Cat. No.	Units per package
EPxxGTLx-OG	50 x 666	EPCOVER50-P185-JM	155457	1
EPxxGTLx-OG	100 x 666	EPCOVER100-P185-JM	155458	1

Labelling Strips in Transparent Pocket

- Labelling strips can be placed retro-actively
- Self-adhesive
- 1 package = 10 units

wa_vt14413

Depth (mm)	Cabinet Type	Depth x Height (mm) Cover strip	Type Designation	Cat. No.	Units per package
		1000	LAB -BAR_1000	107911	1
			LAB_TAPE_A4_BLANK	107952	1

Partition, Vertical and Horizontal

- Material: Plastic

vt11710

250	BP-O/BPM-F	135 x 1920	BPZ-SCH202	144015	1
270/300	BPM-O/xE Light	150 x 1850	XVTL-SCH203	144016	1
400	BPM-F/xE Light	250 x 1850	XVTL-SCH204	144017	1
600	xE Light	450 x 1850	XVTL-SCH206	144019	1

Busbar Support 60 mm up to 630 A

- Busbar system for mounting behind a cover as of a height of 300 mm
- Center-to-center distance between phases 60 mm
- Expandable to 4 and 5 poles
- Rated conditional short-circuit current up to 85 kA Ipk / 40,5 kA Icw with Cu 1 x 30 x 10 mm, 630 A
  Details see technical part.

vt09610

Rated Current (A)	Dimension Cu (mm)	Type Designation	Cat. No.	Units per package
250 - 630	12x5 - 30x10	SL63031	148582	1
315 - 630	20x5 - 30x10	SL63032	148583	1
630	30x10	SL63033	148584	1

Busbar Support PE/N

- Busbar Support 1 pole , for mounting behind a cover of a height of 150 mm
- Expandable to 2 poles
- Busbar Support 2 poles , for mounting behind a cover of a height of 300 mm

vt09710

250 - 630	12x5 - 30x10	SLPEN63011	148585	1
315 - 630	20x5 - 30x10	SLPEN63012	148586	1
630	30x10	SLPEN63013	148587	1

PE/N Support Offset

- For easier connecting of incoming and outgoing cables and conductors

vt09910

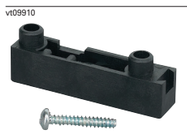

SLPEN630U	148588	1

End Cover of Busbar

- For side covering of busbar 12x5 to 30x10 (250 - 630 A)

vt09810

Description	Number of Poles	Type Designation	Cat. No.	Units per package
3 poles	3 poles	SL630EA	148589	1

Assembly Group for Door Wiring

- Outgoing PG21 with plastic tube 450 mm long
- Mounting material included
- Without cover plate

vt11510

SEM21

VT11210

SEM/W21

VT07910

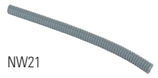

NW21

VT11310

MSWT

VT11610

UKH

Description	Dimension (mm)	Type Designation	Cat. No.	Units per package
Tube connector (straight) incl. counter nut		SEM21	143964	1
Tube connector (angled) incl. counter nut		SEM/W21	143962	1
Corrugated tube (cable protection)		NW21	143963	1
Tube holder		UKH	143961	1
Mounting kit		MSWT	143966	1

Replacement Screws

- 1 package = 100 units

vt11709

vt11609

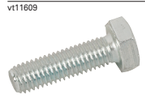

Pan head screw TX20 self-tapping	M4x8	EPLHS-M4X8	144028	1
	M4x16	EPLHS-M4X16	141863	1
Hexagon screw	M8x16	EPHHS-M8X16	144030	1

Technical data Busbar-system, spacing between busbars 60 mm

Busbar-system up to 630 A

Illustration	Designation/type	Width of system No. of supports	Rated conditional short-circuit current at distance between support 250 mm surge current I_{pk}	short-time current I_{cw}	Module units U	Type / Order.-No.
	Rail support, 3-pole for height of cover plate 300 mm					
VT09610	**315 A**	250 mm / 2 pcs.	60 kA	28.6 kA / 0.30s	24	**SL63031**
	Cu 1 x 20 x 5 mm	500 mm / 3 pcs.	60 kA	28.6 kA / 0.30s	48	No.148582
	3-poles	750 mm / 4 pcs.	60 kA	28.6 kA / 0.30s	72	
	4-poles	1000 mm / 5 pcs.	60 kA	28.6 kA / 0.30s	96	
	5-poles	1250 mm / 6 pcs.	60 kA	28.6 kA / 0.30s	120	
B = 250 mm	**400 A**	250 mm / 2 pcs.	85 kA	40.5 kA / 0.30s	24	**SL63032**
	Cu 1 x 30 x 5 mm	500 mm / 3 pcs.	85 kA	40.5 kA / 0.30s	48	No.148583
	3-poles	750 mm / 4 pcs.	85 kA	40.5 kA / 0.30s	72	
B = 500 mm	4-poles	1000 mm / 5 pcs.	85 kA	40.5 kA / 0.30s	96	
	5-poles	1250 mm / 6 pcs.	85 kA	40.5 kA / 0.30s	120	
B = 750 mm	**630 A**	250 mm / 2 pcs.	85 kA	40.5 kA / 0.50s	24	**SL63033**
	Cu 1 x 30 x 10 mm	500 mm / 3 pcs.	85 kA	40.5 kA / 0.50s	48	No.148584
	3-poles	750 mm / 4 pcs.	85 kA	40.5 kA / 0.50s	72	
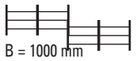 B = 1000 mm	4-poles	1000 mm / 5 pcs.	85 kA	40.5 kA / 0.50s	96	
	5-poles	1250 mm / 6 pcs.	85 kA	40.5 kA / 0.50s	120	
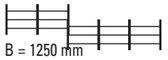 B = 1250 mm						

Busbar support, 3-/5-poles height of cover plate 300 mm

VT09610

B = 250 mm

B = 500 mm

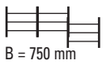
B = 750 mm

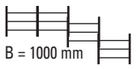
B = 1000 mm

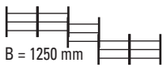
B = 1250 mm

Surge current resistance depending on distance between busbar supports

250 A
Cu 1 x 12 x 5 mm

315 A
Cu 1 x 20 x 5 mm

355 A
Cu 2 x 12 x 5 mm

400 A
Cu 1 x 30 x 5 mm

500 A
Cu 1 x 20 x 10 mm

630 A
Cu 1 x 30 x 10 mm

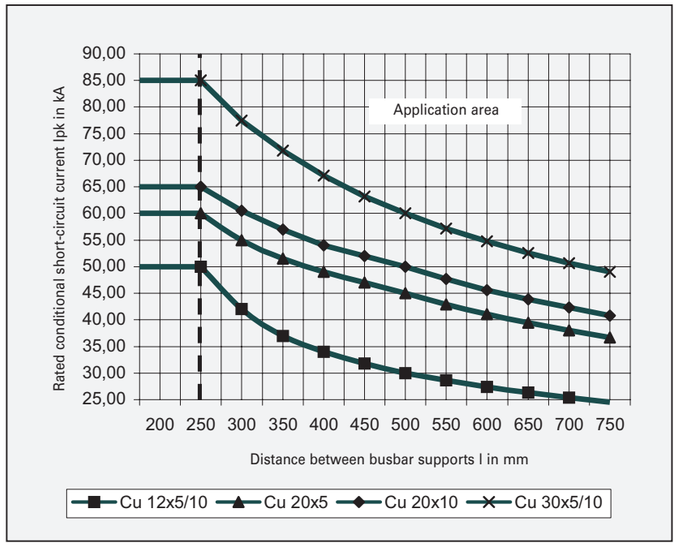

Technical data Busbar-system, spacing between busbars 100 mm

Busbar-system up to 630 A

Illustration	Designation/type	Rated current	Rated conditional short-circuit current at distance between support 500 mm surge current I_{pk}	short-time current I_{cw}	Type / Order.-No.
	Rail support, 3-pole for height of cover plate 450 mm				
VT07510	**315 A**		21.0 kA	10.0 kA / 1s	**TN630/3-R10**
	Cu 1 x 20 x 5 mm				No.148590
	400 A		32.0 kA	15.0 kA / 1s	
	Cu 1 x 30 x 5 mm				
	500 A		42.0 kA	20.0 kA / 1s	
	Cu 1 x 20 x 10 mm				
	630 A		63.0 kA	30.0 kA / 1s	
	Cu 1 x 30 x 10 mm				

Technical data Busbar-system, spacing between busbars 185 mm

Busbar-system up to 2000 A

Illustration	Designation/type	Rated current	Rated conditional short-circuit current at distance between support 1000 mm surge current I_{pk}	short-time current I_{cw}	Type / Order.-No.
	Rail support, 3-pole for height of cover plate 750 mm				
VT07410	**800 A**		64.0 kA	30.5 kA / 1s	**T2000/3-R185VT**
	Cu 1 x 40 x 10 mm				No.148591
	1000 A		81.0 kA	38.5 kA / 1s	
	Cu 1 x 50 x 10 mm				
	1250 A		81.0 kA	38.5 kA / 1s	
	Cu 1 x 60 x 10 mm				
	1500 A		81.0 kA	38.5 kA / 1s	
	Cu 1 x 80 x 10 mm				
	2000 A		81.0 kA	38.5 kA / 1s	
	Cu 1 x 100 x 10 mm				

193170_LDO, 293313_LDO, 501316_LDO1

Distribution Boards

Distribution Boards

• **Chapter 0**
Table of Contents ..... Page 3

• **Chapter 1**
Field distribution boards protection class II ..... Page 4
1.1 Surface-mounted field distribution board EWK-G.., IP31 ..... Page 5

• **Chapter 2**
Enclosures / switchgear cabinets for installation system EP in protection class I and II ..... Page 10
2.1 Surface-mounted and floor-standing distribution board EMC2-H.../55-W, IP55 ..... Page 11
2.2 Surface-mounted distribution board BP-0-...-EP-W, IP31 ..... Page 20
2.3 Surface-mounted distribution board BPM-0-...-EP, IP55 ..... Page 26
2.4 Floor-standing distribution board BPM-F-...-EP, IP55 ..... Page 29

• **Chapter 3**
EP installation system - standard modules / mounting kits ..... Page 34
3.1 EP installation system - standard modules / Fitting-kits, Width 250 mm ..... Page 36
3.2 EP installation system - standard modules / Fitting-kits, Width 500 mm ..... Page 40
3.3 EP installation system - standard modules / Fitting-kits, Width 750 mm ..... Page 44
3.4 EP installation system - standard modules / Fitting-kits, Technical data ..... Page 46

• **Chapter 4**
EP installation system - general accessories ..... Page 53

• **Chapter 5**
Enclosures / switchgear cabinets for installation system ProfiSNAP ..... Page 66
5.1 Surface-mounted distribution board BP-0-..., IP30 (pre-assembled) ..... Page 67
5.2 Surface-mounted distribution board BP-0-..., IP30 (flat-pack, grey) ..... Page 72
5.3 Surface-mounted distribution board BP-0-..., IP30 (flat-pack, white) ..... Page 74
5.4 Surface-mounted distribution board BPM-0-..., IP55 ..... Page 95
5.5 Flush-mounted distribution board BP(A/M)-U-3S-..., IP30/IP43/IP54 ..... Page 105
5.6 Floor-standing distribution board BP-F-..., IP30 ..... Page 119
5.7 Outdoor distribution board BP-VF/DZ..., IP44 ..... Page 130
5.8 Floor-standing distribution board BPM-F-..., IP55 ..... Page 137
5.9 Shared compartments inside distribution boards BP(M)-0, BP(M)-F ..... Page 149

• **Chapter 6**
ProfiSNAP installation system - components for interior fitting ..... Page 154
6.1 Front plates, blind and with 45mm cut-out for DIN-rail devices ..... Page 156
6.2 Mounting kits for Moulded Case Circuit Breaker ..... Page 164
6.3 Mounting kits for Fuse Switch Disconnectors ..... Page 182
6.4 Mounting kits for BZM, Dumeco and QSA ..... Page 188
6.5 Mounting kits for Earthing and Neutral conductors ..... Page 189
6.6 Mounting plates for universal fixing of different components ..... Page 192
6.7 Mounting kits for Energy Meters and various metering equipment ..... Page 200

• **Chapter 7**
ProfiSNAP installation system - general accessories ..... Page 207

• **Chapter 8**
General accessories xEnergy Basic ..... Page 228

• **Chapter 9**
Overall technical data xEnergy Basic ..... Page 248

• **Chapter 10**
Verification of temperature rise by testing - selection of reference examples ..... Page 253

System Overview

BP-0-..., IP30 (IP31), enclosure depth 262 mm

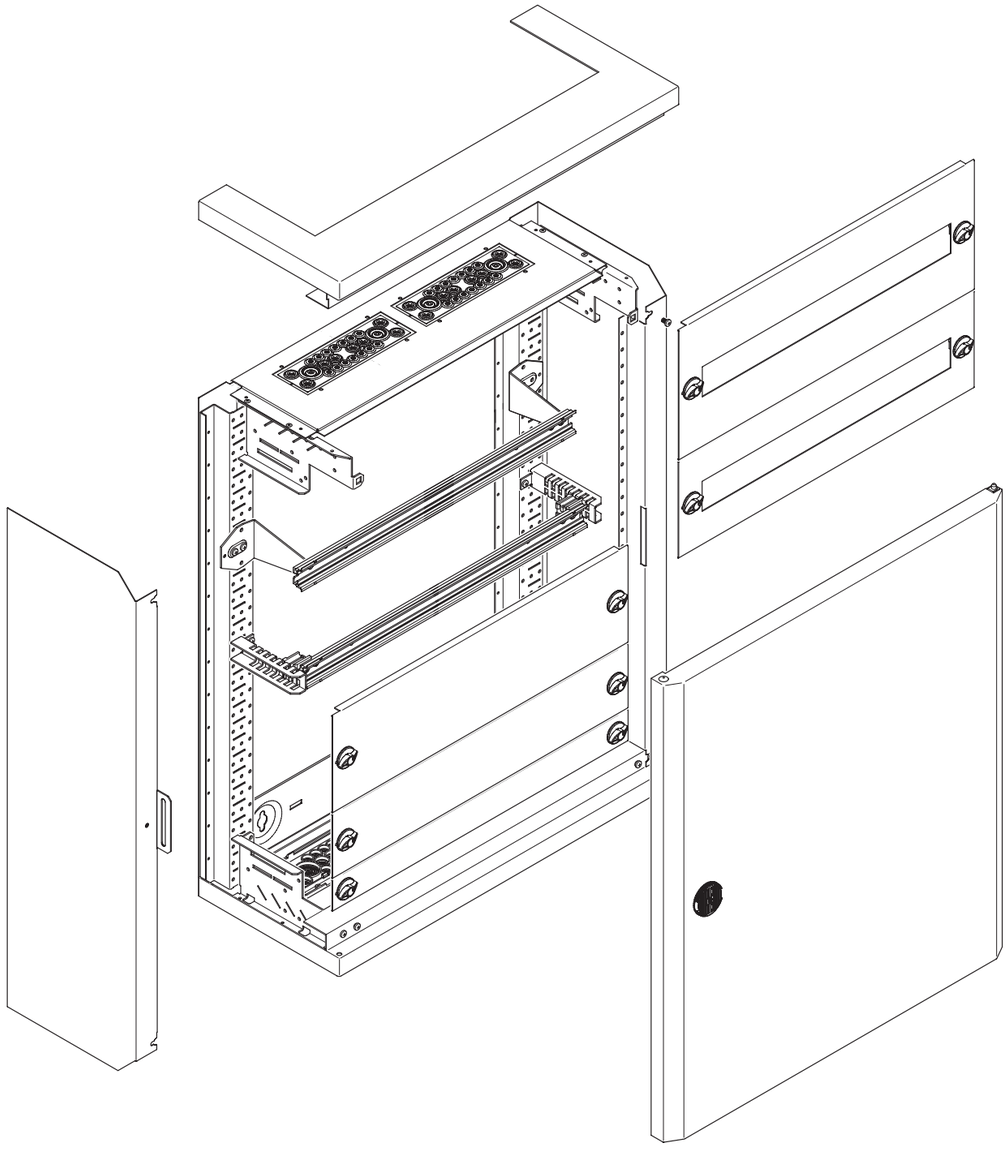

xEnergy Distribution Boards

Surface-mounted distribution board BP-O-..., IP30 (pre-assembled)

vt27717

wa_vt07813

wa_vt07813

vt27517

Width [mm]	Height [mm]	Height int. [mm]	Pre-assembled configuration / installation back frame / incl. 2K-flange on top / Door with swing handle		Pre-assembled configuration / individual installation / incl. 2K-flange on top / Door with turning bolt
			RAL 7035 grey Fully equipped with mounting insert	RAL 9016 white Fully equipped with mounting insert	RAL 7035 grey Empty
			Cat. No. per unit unit = 1 pc.	Cat. No. per unit unit = 1 pc.	Cat. No. per unit unit = 1 pc.
BP-O-..., IP30 - fully assembled					
400 (13MU/row)	460	350	**BP-O-400/4-C** 194518	**BP-O-400/4-C-W** 194522	**BP-O-400/4-PSN** 149116
	760	650	**BP-O-400/7-C** 194519	**BP-O-400/7-C-W** 194523	**BP-O-400/7-PSN** 149117
	1060	950	**BP-O-400/10-C** 194520	**BP-O-400/10-C-W** 194524	**BP-O-400/10-PSN** 149118
	1260	1150	**BP-O-400/12-C** 194521	**BP-O-400/12-C-W** 194515	**BP-O-400/12-PSN** 149119
	1560	1450	-	-	**BP-O-400/15-PSN** 149150
600 (24MU/row)	460	350	-	-	**BP-O-600/4-PSN** 149151
	760	650	**BP-O-600/7-C** 293307	**BP-O-600/7-C-W** 105534	**BP-O-600/7-PSN** 149152
	1060	950	**BP-O-600/10-C** 293308	**BP-O-600/10-C-W** 105535	**BP-O-600/10-PSN** 149153
	1260	1150	**BP-O-600/12-C** 293309	**BP-O-600/12-C-W** 105536	**BP-O-600/12-PSN** 149154
	1560	1450	**BP-O-600/15-C** 293310	**BP-O-600/15-C-W** 105537	**BP-O-600/15-PSN** 149155
800 (35MU/row)	460	350	-	-	**BP-O-800/4-PSN** 149156
	760	650	**BP-O-800/7-C** 293311	**BP-O-800/7-C-W** 105538	**BP-O-800/7-PSN** 149157
	1060	950	**BP-O-800/10-C** 293312	**BP-O-800/10-C-W** 105539	**BP-O-800/10-PSN** 149158
	1260	1150	**BP-O-800/12-C** 293313	**BP-O-800/12-C-W** 105540	**BP-O-800/12-PSN** 149159
	1560	1450	**BP-O-800/15-C** 293314	**BP-O-800/15-C-W** 105541	**BP-O-800/15-PSN** 149160
1000 (46MU/row)	1060	950	-	-	**BP-O-1000/10-PSN** 149161
	1260	1150	-	-	**BP-O-1000/12-PSN** 149162
	1560	1450	-	-	**BP-O-1000/15-PSN** 149163
1200 (57MU/row)	1260	1150	-	-	**BP-O-1200/12-PSN** 149164
	1560	1450	-	-	**BP-O-1200/15-PSN** 149165

xEnergy Distribution Boards

Surface-mounted distribution board BP-O-..., IP30 (pre-assembled)

wa_vt23813

wa_vt23713

EP-502144_L

EP-502137_L

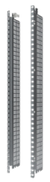

EP-502577_L

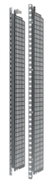

Welded construction / installation back frame / completely closed / Door with BPZ-LOCK/SH6METAL		Installation back frame / Frontplate support	MSW installation / Mounting Side Wall (MSW) with standard depth	MSW installation / Mounting Side Wall (MSW) with extended depth
RAL 7035 grey Empty fire-resistant (E60/EW60)	RAL 9016 white Empty fire-resistant (E60/EW60)			
Cat. No. per unit unit = 1 pc.	Cat. No. per unit unit = 1 pc.	Cat. No. per unit unit = 1 pc.	Cat. No. per unit unit = 1 pc.	Cat. No. per unit unit = 1 pc.
BP-O-400/4-EW 116614	**BP-O-400/4-EW-W** 116632	**PSN-FPS/4** EP-502142	**PSN-MSW/4** EP-502135	**PSN-MSW/4-EXT** EP-502575
BP-O-400/7-EW 116615	**BP-O-400/7-EW-W** 116633	**PSN-FPS/7** EP-502143	**PSN-MSW/7** EP-502136	**PSN-MSW/7-EXT** EP-502576
BP-O-400/10-EW 116616	**BP-O-400/10-EW-W** 116634	**PSN-FPS/10** EP-502144	**PSN-MSW/10** EP-502137	**PSN-MSW/10-EXT** EP-502577
BP-O-400/12-EW 116617	**BP-O-400/12-EW-W** 116635	**PSN-FPS/12** EP-502145	**PSN-MSW/12** EP-502138	**PSN-MSW/12-EXT** EP-502578
BP-O-400/15-EW 116618	**BP-O-400/15-EW-W** 116636	**PSN-FPS/15** EP-502146	**PSN-MSW/15** EP-502139	**PSN-MSW/15-EXT** EP-502579
BP-O-600/4-EW 116619	**BP-O-600/4-EW-W** 116637	**PSN-FPS/4** EP-502142	**PSN-MSW/4** EP-502135	**PSN-MSW/4-EXT** EP-502575
BP-O-600/7-EW 116620	**BP-O-600/7-EW-W** 116638	**PSN-FPS/7** EP-502143	**PSN-MSW/7** EP-502136	**PSN-MSW/7-EXT** EP-502576
BP-O-600/10-EW 116621	**BP-O-600/10-EW-W** 116639	**PSN-FPS/10** EP-502144	**PSN-MSW/10** EP-502137	**PSN-MSW/10-EXT** EP-502577
BP-O-600/12-EW 116622	**BP-O-600/12-EW-W** 116640	**PSN-FPS/12** EP-502145	**PSN-MSW/12** EP-502138	**PSN-MSW/12-EXT** EP-502578
BP-O-600/15-EW 116623	**BP-O-600/15-EW-W** 116641	**PSN-FPS/15** EP-502146	**PSN-MSW/15** EP-502139	**PSN-MSW/15-EXT** EP-502579
BP-O-800/4-EW 116624	**BP-O-800/4-EW-W** 116642	**EP-502146** EP-502142	**PSN-MSW/4** EP-502135	**PSN-MSW/4-EXT** EP-502575
BP-O-800/7-EW 116625	**BP-O-800/7-EW-W** 116643	**PSN-FPS/7** EP-502143	**PSN-MSW/7** EP-502136	**PSN-MSW/7-EXT** EP-502576
BP-O-800/10-EW 116626	**BP-O-800/10-EW-W** 116644	**PSN-FPS/10** EP-502144	**PSN-MSW/10** EP-502137	**PSN-MSW/10-EXT** EP-502577
BP-O-800/12-EW 116627	**BP-O-800/12-EW-W** 116645	**PSN-FPS/12** EP-502145	**PSN-MSW/12** EP-502138	**PSN-MSW/12-EXT** EP-502578
BP-O-800/15-EW 116628	**BP-O-800/15-EW-W** 116646	**PSN-FPS/15** EP-502146	**PSN-MSW/15** EP-502139	**PSN-MSW/15-EXT** EP-502579
BP-O-1000/10-EW 116629	**BP-O-1000/10-EW-W** 116647	**PSN-FPS/10** EP-502144	**PSN-MSW/10** EP-502137	**PSN-MSW/10-EXT** EP-502577
BP-O-1000/12-EW 116630	**BP-O-1000/12-EW-W** 116648	**PSN-FPS/12** EP-502145	**PSN-MSW/12** EP-502138	**PSN-MSW/12-EXT** EP-502578
BP-O-1000/15-EW 116631	**BP-O-1000/15-EW-W** 116649	**PSN-FPS/15** EP-502146	**PSN-MSW/15** EP-502139	**PSN-MSW/15-EXT** EP-502579
-	-	**PSN-FPS/12** EP-502145	**PSN-MSW/12** EP-502138	**PSN-MSW/12-EXT** EP-502578
-	-	**PSN-FPS/15** EP-502146	**PSN-MSW/15** EP-502139	**PSN-MSW/15-EXT** EP-502579

Description

BP-O-..., IP30 (IP31), enclosure depth 262 mm

- Delivery as flat-pack or pre-assembled cabinet possible
- Degree of protection IP30
- Impact resistance IK08
- Protection class I (protective earth)
- Cable entry / flange plate individually configurable
- The enclosure can be rotated by 180°
- Quick and easy change of the hinge direction, door opening angle ~160°
- Standard plastic cam lock
- Direct wall mounting possible
- Enclosure made from powder-coated sheet steel, RAL 7035 / RAL 9016
- Lateral add-on connection as well as top/bottom arrangement possible
- Variable interior installation either with „Mounting base frame" or „Mounting side panel" (MSW)
- Better accessibility during assembly due to multi-layered construction (Base frame - cable entry - interior fitting - installation components - wiring - enclosed covering - door)

Technical data

	BP-O-...
Electrical	
Type conforms to	IEC/EN 62208
Protection class	I (protective earth)
Degree of protection	IP30 (closed version with door/flansche) IP31 (special top panels BP-TBP1-…-IP31 required) IP2XC (open door, the installtion level is properly protected with front covers)
Impact resistance	IK08
Rated operational voltage	415 VAC / 50Hz
Rated current	Max. 630 A (depending on the type of incoming circuit breaker or the busbar system being used)
Earthing concept for the enclosure	
Main earthing	By means of self-tapping screw M5 on base frame
Door earthing	By means of M6 welding bolts

The permissible temperature increases for switchgear assemblies with a rated current of up to 630 A can be evaluated in accordance with section 10.10.4.2 of IEC/EN 61439-1.

For the maximum permissible heat dissipation for all devices inside the distribution board at an ambient temperature of 35° C and ΔT of 20 K / 35 K at an enclosure height of 75 %, please refer to the table on enclosure dimensions; (calculation method acc.to IEC/TR 60890).

Mechanical	
Enclosure	Modular design by „flat-pack" construction possible, complete cabinets pre-assembled at the factory
Material	Sheet steel 1 mm, phosphated and polyester powder coated (structured) with corrosion protection
Colour	Traffic white, RAL 9016 / Light grey RAL 7035
Door	Hinges on the inside, door opening angle ~160° (in case of lateral alignment ~100°) Doors with transparent window individually configurable, hinged either left or right Three-point locking mechanism based on double-wing design width 1000 / 1200 mm
Type	Flexible interior fitting with installation units ProfiSNAP on base frame or „mounting side panel" (MSW) Mounting base frame: multi-layer construction, installation directly in the enclosure, robust and structured Mounting side panel (MSW): removable mounting insert, external installation, fast and reliable
Locking mechanism	Standard cam lock (plastic), can be exchanged for a metal lock with standard locking mechanism/two-way key bit or doors with swing handler
Cable entry	Complete cabinets equipped with two-component membrane flanges on one side, in case of flat-pack individually configurable, either Closed cable entry / flange plate, with two-component flanges equipped or prepared for F3A-flanges
Ambient condition	Indoor installation (wall mounting) Max. ambient temperature +40° C Min. ambient temperature -5° C
Halogen-free, RoHS	< 1%, yes
Accessories	A 100/200 mm base if used as a floor-standing cabinet, alternative lock options, add-on connection kit
Delivered as	Flat-pack components as well as complete cabinet prepared for „Mounting base frame" or „MSW" Complete cabinets of type BP-O-…-C are already equipped with a standard mounting insert

Dimensions (mm)

BP-O-..., IP30 (IP31), enclosure depth 262 mm

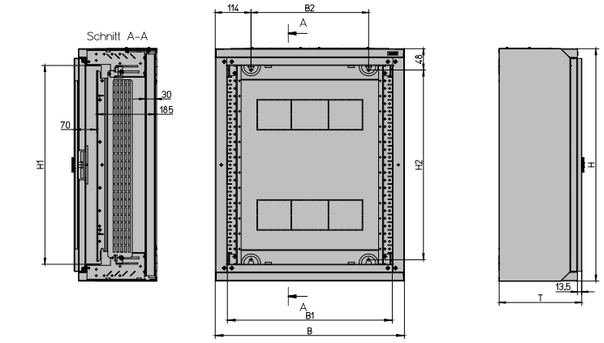

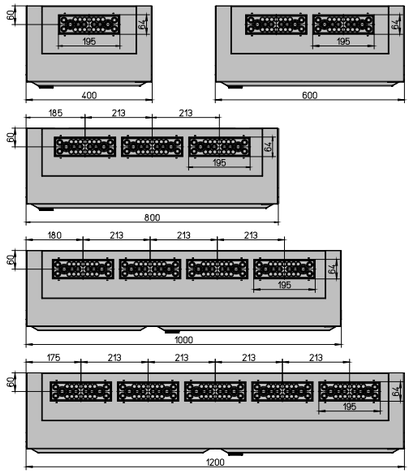

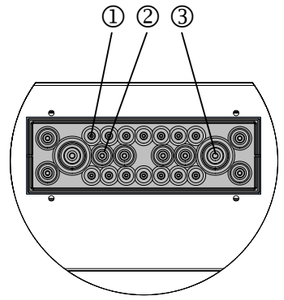

① 14x Ø 11 mm
② 8x Ø 15 mm
③ 2x Ø 28 mm

Type	Overall dimensions			Internal dimensions (front plate)		Wall mounting (Enclosure directly)		Pv [W] (ΔT 20K)	Pv [W] (ΔT 35K)
	Width B	Height H	Depth T	Width B1	Height H1	Width B2	Height H2		
BP-O-400/4	400	460	262	320	350	173	342	39	78
BP-O-400/7	400	760	262	320	650	173	642	54	108
BP-O-400/10	400	1060	262	320	950	173	942	69	138
BP-O-400/12	400	1260	262	320	1150	173	1142	57	115
BP-O-400/15	400	1560	262	320	1450	173	1442	66	132
BP-O-600/4	600	460	262	520	350	373	342	53	107
BP-O-600/7	600	760	262	520	650	373	642	70	141
BP-O-600/10	600	1060	262	520	950	373	942	70	140
BP-O-600/12	600	1260	262	520	1150	373	1142	80	161
BP-O-600/15	600	1560	262	520	1450	373	1442	108	216
BP-O-800/4	800	460	262	720	350	573	342	68	136
BP-O-800/7	800	760	262	720	650	573	642	75	151
BP-O-800/10	800	1060	262	720	950	573	942	95	191
BP-O-800/12	800	1260	262	720	1150	573	1142	120	240
BP-O-800/15	800	1560	262	720	1450	573	1442	139	278
BP-O-1000/10	1000	1060	262	920	950	773	942	134	268
BP-O-1000/12	1000	1260	262	920	1150	773	1142	149	298
BP-O-1000/15	1000	1560	262	920	1450	773	1442	183	366
BP-O-1200/12	1200	1260	262	1120	1150	973	1142	187	375
BP-O-1200/15	1200	1560	262	1120	1450	973	1442	213	427

xEnergy Distribution Boards

Surface-mounted distribution board BP-O-..., IP30 (flat-pack, grey)

xEnergy Basic
Sheet 1/2

vt10808

vt11404

wa_vt02213, vt16504

vt15118

vt15318
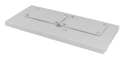

vt00705

vt00505

Width [mm]	Height [mm]	Height int. [mm]	Main frame	Top/bottom panels closed without cutout / 1 pair / Single element	Top/bottom panels with cutout for cable entry / Flange plate / 1 pair / Single element	Top panel IP31 (closed) incl. F3A-XP	Cable entry / Flange plate / Closed	Cable entry / Flange plate incl. 2K-flange
			Cat. No. per unit unit = 1 pc.	Cat. No. per unit unit = 1 pc.	Cat. No. per unit unit = 1 pc.	Cat. No. per unit unit = 1 pc.	Cat. No. per unit unit = 1 pc.	Cat. No. per unit unit = 1 pc.
BP-O-..., IP30 (universal installation, mounting back frame or MSW) colour GREY (RAL 7035)								
400 (13MU/row)	460	350	**BP-MF-400/4** 286653	**BP-TBP-400-BL** 286698 **BP-TBP1-400-BL** 144689	**BP-TBP-400-CE** 286699 **BP-TBP1-400-CE** 144704	**BP-TBP1-400-F3A-IP31** 194526	**BP-FLP-400-BL** 286704	**BP-FLP-400-2K** 286705
	760	650	**BP-MF-400/7** 286654					
	1060	950	**BP-MF-400/10** 286655					
	1260	1150	**BP-MF-400/12** 286656					
	1560	1450	**BP-MF-400/15** 286657					
600 (24MU/row)	460	350	**BP-MF-600/4** 286658	**BP-TBP-600-BL** 286700 **BP-TBP1-600-BL** 144700	**BP-TBP-600-CE** 286701 **BP-TBP1-600-CE** 144705	**BP-TBP1-600-F3A-IP31** 194527	**BP-FLP-600-BL** 286707	**BP-FLP-600-2K** 286708
	760	650	**BP-MF-600/7** 286659					
	1060	950	**BP-MF-600/10** 286660					
	1260	1150	**BP-MF-600/12** 286661					
	1560	1450	**BP-MF-600/15** 286662					
800 (35MU/row)	460	350	**BP-MF-800/4** 286663	**BP-TBP-800-BL** 286702 **BP-TBP1-800-BL** 144701	**BP-TBP-800-CE** 286703 **BP-TBP1-800-CE** 144706	**BP-TBP1-800-F3A-IP31** 194528	**BP-FLP-800-BL** 286710	**BP-FLP-800-2K** 286711
	760	650	**BP-MF-800/7** 286664					
	1060	950	**BP-MF-800/10** 286665					
	1260	1150	**BP-MF-800/12** 286666					
	1560	1450	**BP-MF-800/15** 286667					
1000 (46MU/row)	1060	950	**BP-MF-1000/10** 293521	**BP-TBP-1000-BL** 293550 **BP-TBP1-1000-BL** 144702	**BP-TBP-1000-CE** 293552 **BP-TBP1-1000-CE** 144707	**BP-TBP1-1000-F3A-IP31** 194529	**BP-FLP-1000-BL** 293558	**BP-FLP-1000-2K** 293560
	1260	1150	**BP-MF-1000/12** 293522					
	1560	1450	**BP-MF-1000/15** 293523					
1200 (57MU/row)	1260	1150	**BP-MF-1200/12** 293524	**BP-TBP-1200-BL** 293554 **BP-TBP1-1200-BL** 144703	**BP-TBP-1200-CE** 293556 **BP-TBP1-1200-CE** 144708	**BP-TBP1-1200-F3A-IP31** 194530	**BP-FLP-1200-BL** 293564	**BP-FLP-1200-2K** 293566
	1560	1450	**BP-MF-1200/15** 293525					

xEnergy Basic
Sheet 2/2

Surface-mounted distribution board BP-O-..., IP30 (flat-pack, grey)

vt00605

vt13208

vt16704, vt16804

wa_vt01118

vt27817

vt02118

vt06905, wa_vt51413

vt02818, vt02718

Cable entry / Flange plate / Prepared for F3A-flange	Cable entry / Flange plate with shift-back flange	Side panels 1 pair	Sheet-metal door / Swing handle	Sheet-metal door / Clip-down handle	Sheet-metal door (transparent) / Swing handle	Plinth 100 mm / Side parts 1 pair / Front cover	Plinth 200 mm / Side parts 1 pair / Front cover
Cat. No. per unit unit = 1 pc.	Cat. No. per unit unit = 1 pc.	Cat. No. per unit unit = 1 pc.	Cat. No. per unit unit = 1 pc.	Cat. No. per unit unit = 1 pc.	Cat. No. per unit unit = 1 pc.	Cat. No. per unit unit = 1 pc.	Cat. No. per unit unit = 1 pc.
BP-FLP-400-F3A 286706	**BP-FLP-400-VS** 119355	**BP-SP-4-PSN** 111339	**BP-DS-400/4** 286713	**BP-DS-400/4-P** 119063	**BP-DT-400/4** 286728	**BPZ-SS-1/249** 119168 **BPZ-FS-400/1** 293493	**BPZ-SS-2/249** 119172 **BPZ-FS-400/2** 293495
		BP-SP-7-PSN 111341	**BP-DS-400/7** 286714	**BP-DS-400/7-P** 119064	**BP-DT-400/7** 286729		
		BP-SP-10-PSN 111342	**BP-DS-400/10** 286715	**BP-DS-400/10-P** 119065	**BP-DT-400/10** 286730		
		BP-SP-12-PSN 111343	**BP-DS-400/12** 286716	**BP-DS-400/12-P** 119066	**BP-DT-400/12** 286731		
		BP-SP-15-PSN 111344	**BP-DS-400/15** 286717	**BP-DS-400/15-P** 119067	**BP-DT-400/15** 286732		
BP-FLP-600-F3A 286709	**BP-FLP-600-VS** 119356	**BP-SP-4-PSN** 111339	**BP-DS-600/4** 286718	**BP-DS-600/4-P** 119068	**BP-DT-600/4** 286733	**BPZ-SS-1/249** 119168 **BPZ-FS-600/1** 293497	**BPZ-SS-2/249** 119172 **BPZ-FS-600/2** 293499
		BP-SP-7-PSN 111341	**BP-DS-600/7** 286719	**BP-DS-600/7-P** 119069	**BP-DT-600/7** 286734		
		BP-SP-10-PSN 111342	**BP-DS-600/10** 286720	**BP-DS-600/10-P** 119070	**BP-DT-600/10** 286735		
		BP-SP-12-PSN 111343	**BP-DS-600/12** 286721	**BP-DS-600/12-P** 119071	**BP-DT-600/12** 286736		
		BP-SP-15-PSN 111344	**BP-DS-600/15** 286722	**BP-DS-600/15-P** 119072	**BP-DT-600/15** 286737		
BP-FLP-800-F3A 286712	**BP-FLP-800-VS** 119357	**BP-SP-4-PSN** 111339	**BP-DS-800/4** 286723	**BP-DS-800/4-P** 119073	**BP-DT-800/4** 286738	**BPZ-SS-1/249** 119168 **BPZ-FS-800/1** 293501	**BPZ-SS-2/249** 119172 **BPZ-FS-800/2** 293503
		BP-SP-7-PSN 111341	**BP-DS-800/7** 286724	**BP-DS-800/7-P** 119074	**BP-DT-800/7** 286739		
		BP-SP-10-PSN 111342	**BP-DS-800/10** 286725	**BP-DS-800/10-P** 119075	**BP-DT-800/10** 286740		
		BP-SP-12-PSN 111343	**BP-DS-800/12** 286726	**BP-DS-800/12-P** 119076	**BP-DT-800/12** 286741		
		BP-SP-15-PSN 111344	**BP-DS-800/15** 286727	**BP-DS-800/15-P** 119077	**BP-DT-800/15** 286742		
BP-FLP-1000-F3A 293562	**BP-FLP-1000-VS** 119358	**BP-SP-10-PSN** 111342	**BP-DS-600/10 + BP-DS-400/10-L** 286720 + 293570	**BP-DS-600/10-P + BP-DS-400/10-L** 119070 + 293570	**BP-DT-600/10 + BP-DT-400/10-L** 286735 + 293580	**BPZ-SS-1/249** 119168 **BPZ-FS-1000/1** 293505	**BPZ-SS-2/249** 119172 **BPZ-FS-1000/2** 293507
		BP-SP-12-PSN 111343	**BP-DS-600/12 + BP-DS-400/12-L** 286721 + 293572	**BP-DS-600/12-P + BP-DS-400/12-L** 119071 + 293572	**BP-DT-600/12 + BP-DT-400/12-L** 286736 + 293582		
		BP-SP-15-PSN 111344	**BP-DS-600/15 + BP-DS-400/15-L** 286722 + 293574	**BP-DS-600/15-P + BP-DS-400/15-L** 119072 + 293574	**BP-DT-600/15 + BP-DT-400/15-L** 286737 + 293584		
BP-FLP-1200-F3A 293568	**BP-FLP-1200-VS** 119359	**BP-SP-12-PSN** 111343	**BP-DS-600/12 + BP-DS-600/12-L** 286721 + 293576	**BP-DS-600/12-P + BP-DS-600/12-L** 119071 + 293576	**BP-DT-600/12 + BP-DT-600/12-L** 286736 + 293586	**BPZ-SS-1/249** 119168 **BPZ-FS-1200/1** 293509	**BPZ-SS-2/249** 119172 **BPZ-FS-1200/2** 293511
		BP-SP-15-PSN 111344	**BP-DS-600/15 + BP-DS-600/15-L** 286722 + 293578	**BP-DS-600/15-P + BP-DS-600/15-L** 119072 + 293578	**BP-DT-600/15 + BP-DT-600/15-L** 286737 + 293588		

xEnergy Distribution Boards

Surface-mounted distribution board BP-O-..., IP30 (flat-pack, white)

xEnergy Basic Sheet 1/2

vt10808

vt11404

wa_vt02213, vt16504

vt15118

vt15318

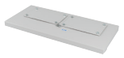

vt00705

vt00505

Width [mm]	Height [mm]	Height int. [mm]	Main frame	Top/bottom panels closed without cutout / 1 pair / Single element	Top/bottom panels with cutout for cable entry / Flange plate / 1 pair / Single element	Top panel IP31 (closed) incl. F3A-XP	Cable entry / Flange plate / Closed	Cable entry / Flange plate incl. 2K-flange
			Cat. No. per unit unit = 1 pc.	Cat. No. per unit unit = 1 pc.	Cat. No. per unit unit = 1 pc.	Cat. No. per unit unit = 1 pc.	Cat. No. per unit unit = 1 pc.	Cat. No. per unit unit = 1 pc.
BP-O-..., IP30 (universal installation, mounting back frame or MSW) colour WHITE (RAL 9016)								
400 (13MU/row)	460	350	**BP-MF-400/4** 286653	**BP-TBP-400-BL-W** 292420 **BP-TBP1-400-BL-W** 144709	**BP-TBP-400-CE-W** 292421 **BP-TBP1-400-CE-W** 144714	**BP-TBP1-400-F3A-IP31-W** 194531	**BP-FLP-400-BL-W** 292426	**BP-FLP-400-2K-W** 292427
	760	650	**BP-MF-400/7** 286654					
	1060	950	**BP-MF-400/10** 286655					
	1260	1150	**BP-MF-400/12** 286656					
	1560	1450	**BP-MF-400/15** 286657					
600 (24MU/row)	460	350	**BP-MF-600/4** 286658	**BP-TBP-600-BL-W** 292422 **BP-TBP1-600-BL-W** 144710	**BP-TBP-600-CE-W** 292423 **BP-TBP1-600-CE-W** 144715	**BP-TBP1-600-F3A-IP31-W** 194532	**BP-FLP-600-BL-W** 292429	**BP-FLP-600-2K-W** 292430
	760	650	**BP-MF-600/7** 286659					
	1060	950	**BP-MF-600/10** 286660					
	1260	1150	**BP-MF-600/12** 286661					
	1560	1450	**BP-MF-600/15** 286662					
800 (35MU/row)	460	350	**BP-MF-800/4** 286663	**BP-TBP-800-BL-W** 292424 **BP-TBP1-800-BL-W** 144711	**BP-TBP-800-CE-W** 292425 **BP-TBP1-800-CE-W** 144716	**BP-TBP1-800-F3A-IP31-W** 194533	**BP-FLP-800-BL-W** 292432	**BP-FLP-800-2K-W** 292433
	760	650	**BP-MF-800/7** 286664					
	1060	950	**BP-MF-800/10** 286665					
	1260	1150	**BP-MF-800/12** 286666					
	1560	1450	**BP-MF-800/15** 286667					
1000 (46MU/row)	1060	950	**BP-MF-1000/10** 293521	**BP-TBP-1000-BL-W** 293551 **BP-TBP1-1000-BL-W** 144712	**BP-TBP-1000-CE-W** 293553 **BP-TBP1-1000-CE-W** 144717	**BP-TBP1-1000-F3A-IP31-W** 194534	**BP-FLP-1000-BL-W** 293559	**BP-FLP-1000-2K-W** 293561
	1260	1150	**BP-MF-1000/12** 293522					
	1560	1450	**BP-MF-1000/15** 293523					
1200 (57MU/row)	1260	1150	**BP-MF-1200/12** 293524	**BP-TBP-1200-BL-W** 293555 **BP-TBP1-1200-BL-W** 144713	**BP-TBP-1200-CE-W** 293557 **BP-TBP1-1200-CE-W** 144718	**BP-TBP1-1200-F3A-IP31-W** 194535	**BP-FLP-1200-BL-W** 293565	**BP-FLP-1200-2K-W** 293567
	1560	1450	**BP-MF-1200/15** 293525					

xEnergy Distribution Boards

Surface-mounted distribution board BP-O-..., IP30 (flat-pack, white)

vt00605

vt13208

vt16704, vt16804

wa_vt01118

vt27817

vt02118

vt06905, wa_vt51413

vt02818, vt02718

Cable entry / Flange plate Prepared for F3A-flange	Cable entry / Flange plate / With shift-back flange	Side panels 1 pair	Sheet-metal door / Swing handle	Sheet-metal door / Clip-down handle	Sheet-metal door / (transparent) Swing handle	Plinth 100 mm / Side parts 1 pair / Front cover	Plinth 200 mm / Side parts 1 pair / Front cover
Cat. No. per unit unit = 1 pc.	Cat. No. per unit unit = 1 pc.	Cat. No. per unit unit = 1 pc.	Cat. No. per unit unit = 1 pc.	Cat. No. per unit unit = 1 pc.	Cat. No. per unit unit = 1 pc.	Cat. No. per unit unit = 1 pc.	Cat. No. per unit unit = 1 pc.
BP-FLP-400-F3A-W 292428	**BP-FLP-400-VS-W** 131573	**BP-SP-4-W-PSN** 111345	**BP-DS-400/4-W** 292435	**BP-DS-400/4-P-W** 119078	**BP-DT-400/4-W** 292450	**BPZ-SS-1/249-W** 119174 **BPZ-FS-400/1-W** 293494	**BPZ-SS-2/249-W** 119176 **BPZ-FS-400/2-W** 293496
		BP-SP-7-W-PSN 111347	**BP-DS-400/7-W** 292436	**BP-DS-400/7-P-W** 119079	**BP-DT-400/7-W** 292451		
		BP-SP-10-W-PSN 111348	**BP-DS-400/10-W** 292437	**BP-DS-400/10-P-W** 119080	**BP-DT-400/10-W** 292452		
		BP-SP-12-W-PSN 111349	**BP-DS-400/12-W** 292438	**BP-DS-400/12-P-W** 119081	**BP-DT-400/12-W** 292453		
		BP-SP-15-W-PSN 111350	**BP-DS-400/15-W** 292439	**BP-DS-400/15-P-W** 119082	**BP-DT-400/15-W** 292454		
BP-FLP-600-F3A-W 292431	**BP-FLP-600-VS-W** 131574	**BP-SP-4-W-PSN** 111345	**BP-DS-600/4-W** 292440	**BP-DS-600/4-P-W** 119083	**BP-DT-600/4-W** 292455	**BPZ-SS-1/249-W** 119174 **BPZ-FS-600/1-W** 293498	**BPZ-SS-2/249-W** 119176 **BPZ-FS-600/2-W** 293500
		BP-SP-7-W-PSN 111347	**BP-DS-600/7-W** 292441	**BP-DS-600/7-P-W** 119084	**BP-DT-600/7-W** 292456		
		BP-SP-10-W-PSN 111348	**BP-DS-600/10-W** 292442	**BP-DS-600/10-P-W** 119085	**BP-DT-600/10-W** 292457		
		BP-SP-12-W-PSN 111349	**BP-DS-600/12-W** 292443	**BP-DS-600/12-P-W** 119086	**BP-DT-600/12-W** 292458		
		BP-SP-15-W-PSN 111350	**BP-DS-600/15-W** 292444	**BP-DS-600/15-P-W** 119087	**BP-DT-600/15-W** 292459		
BP-FLP-800-F3A-W 292434	**BP-FLP-800-VS-W** 131575	**BP-SP-4-W-PSN** 111345	**BP-DS-800/4-W** 292445	**BP-DS-800/4-P-W** 119088	**BP-DT-800/4-W** 292460	**BPZ-SS-1/249-W** 119174 **BPZ-FS-600/1-W** 293498	**BPZ-SS-2/249-W** 119176 **BPZ-FS-800/2-W** 293504
		BP-SP-7-W-PSN 111347	**BP-DS-800/7-W** 292446	**BP-DS-800/7-P-W** 119089	**BP-DT-800/7-W** 292461		
		BP-SP-10-W-PSN 111348	**BP-DS-800/10-W** 292447	**BP-DS-800/10-P-W** 119090	**BP-DT-800/10-W** 292462		
		BP-SP-12-W-PSN 111349	**BP-DS-800/12-W** 292448	**BP-DS-800/12-P-W** 119091	**BP-DT-800/12-W** 292463		
		BP-SP-15-W-PSN 111350	**BP-DS-800/15-W** 292449	**BP-DS-800/15-P-W** 119092	**BP-DT-800/15-W** 292464		
BP-FLP-1000-F3A-W 293563	**BP-FLP-1000-VS-W** 131576	**BP-SP-10-W-PSN** 111348	BP-DS-600/10-W + BP-DS-400/10-L-W 292442 + 293571	BP-DS-600/10-P-W + BP-DS-400/10-L-W 119085 + 293571	BP-DT-600/10-W + BP-DT-400/10-L-W 292457 + 293581	**BPZ-SS-1/249-W** 119174 **BPZ-FS-1000/1-W** 293506	**BPZ-SS-2/249-W** 119176 **BPZ-FS-1000/2-W** 293508
		BP-SP-12-W-PSN 111349	BP-DS-600/12-W + BP-DS-400/12-L-W 292443 + 293573	BP-DS-600/12-P-W + BP-DS-400/12-L-W 119086 + 293573	BP-DT-600/12-W + BP-DT-400/12-L-W 292458 + 293583		
		BP-SP-15-W-PSN 111350	BP-DS-600/15-W + BP-DS-400/15-L-W 292444 + 293575	BP-DS-600/15-P-W + BP-DS-400/15-L-W 119087 + 293575	BP-DT-600/15-W + BP-DT-400/15-L-W 292459 + 293585		
BP-FLP-1200-F3A-W 293569	**BP-FLP-1200-VS-W** 131577	**BP-SP-12-W-PSN** 111349	BP-DS-600/12-W + BP-DS-600/12-L-W 292443 + 293577	BP-DS-600/12-P-W + BP-DS-600/12-L-W 119086 + 293577	BP-DT-600/12-W + BP-DT-600/12-L-W 292458 + 293587	**BPZ-SS-1/249-W** 119174 **BPZ-FS-1200/1-W** 293510	**BPZ-SS-2/249-W** 119176 **BPZ-FS-1200/2-W** 293512
		BP-SP-15-W-PSN 111350	BP-DS-600/15-W + BP-DS-600/15-L-W 292444 + 293579	BP-DS-600/15-P-W + BP-DS-600/15-L-W 119087 + 293579	BP-DT-600/15-W + BP-DT-600/15-L-W 292459 + 293589		

Base frames, BP-MF

- Add-on design
- Symmetrical layout
- Consistent system perforation pattern (25 mm grid)
- Material: sheet steel, zinc-coated thickness 1 mm
- Delivered as: 1 base frame, 4 towers, fixing material

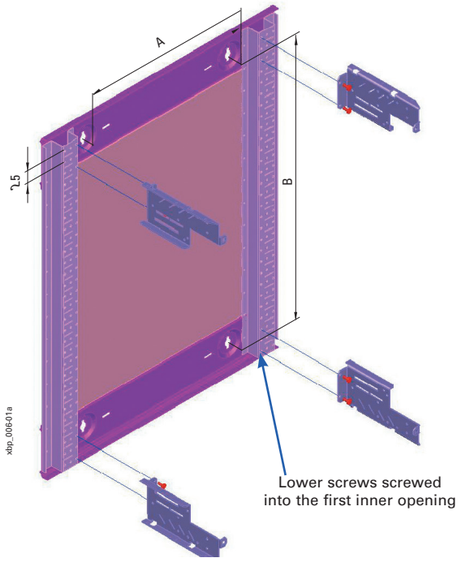

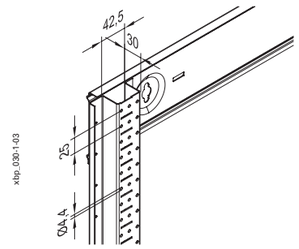

Width [mm]	A
400	173
600	373
800	573
1000	773
1200	973

Height [mm]	B
460	342,5
760	642,5
1060	942,5
1260	1142,5
1560	1442,5

Top / bottom panels, BP-TBP..., BP-TBP1-...-F3A-IP31

- The top/bottom panels are used as covers for the cabinet
- With or without cable entry cutout
- Available as pair or single packaging depending on used version for top/bottom
- For upgrading your wall-mounted enclosure to IP31, it's mandatory to order type BP-TPB1-...-F3A-IP31 as top panel (canopy)
- Material: sheet steel, powder-coated, RAL 7035 or RAL 9016 thickness 1 mm
- Delivered as: 1 top panel, 1 bottom panel, fixing material

Dimensions (mm)

Type	Depth	Without cutout		With cutout	
		Outside width	Inside width	Outside width	Inside width
		A1	A2	A1	A2
BP-TBP-400	249	400	–	400	300
BP-TBP-600	249	600	–	600	500
BP-TBP-800	249	800	–	800	700
BP-TBP-1000	249	1000	–	1000	900
BP-TBP-1200	249	1200	–	1200	1100

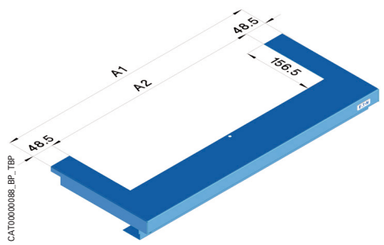

Type	incl. F3A-XP flange
BP-TBP1-400-F3A-IP31	Yes (1 pc.)
BP-TBP1-600-F3A-IP31	Yes (2 pcs.)
BP-TBP1-800-F3A-IP31	Yes (3 pcs.)
BP-TBP1-1000-F3A-IP31	Yes (3 pcs.)
BP-TBP1-1200-F3A-IP31	Yes (4 pcs.)

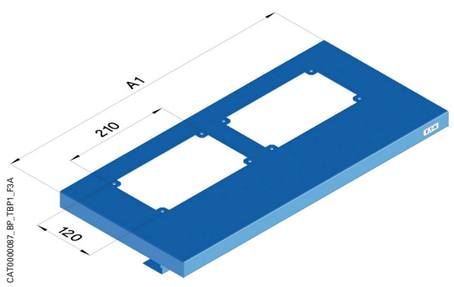

Cable entry / flange plates, BP-FLP

- Blind plate for closing the cable entry
- Cable entry plate with pass-through flange 2K (pre-fitted)
- Cable entry plate designed for F3A flange
- Mounting into BP-TBP-...-CE panels
- Can be used also for floor-standing board IP30
- Material: sheet steel, powder-coated, RAL 7035 thickness 1 mm
- Delivered as: 1 cable entry/flange plate, fixing material

Dimensions (mm)

Type	A1	A2	A3	C1	Number of flanges
BP-FLP-400-BL	300	–	–	155	-
BP-FLP-400-2K	300	–	51,95	155	1
BP-FLP-600-BL	500	–	–	155	-
BP-FLP-600-2K	500	18	45,45	155	2
BP-FLP-800-BL	700	–	–	155	-
BP-FLP-800-2K	700	18	38,95	155	3
BP-FLP-1000-BL	900	–	–	155	-
BP-FLP-1000-2K	900	18	31,45	155	4
BP-FLP-1200-BL	1100	–	–	155	-
BP-FLP-1200-2K	1100	18	25,95	155	5

Type	A1	A2	A3	C1	Number of openings for F3A flanges
BP-FLP-400-F3A	300	–	44,45	155	1
BP-FLP-600-F3A	500	40	19,45	155	2
BP-FLP-800-F3A	700	22	12,45	155	3
BP-FLP-1000-F3A	900	11,33	12,45	155	4
BP-FLP-1200-F3A	1100	6	12,45	155	5

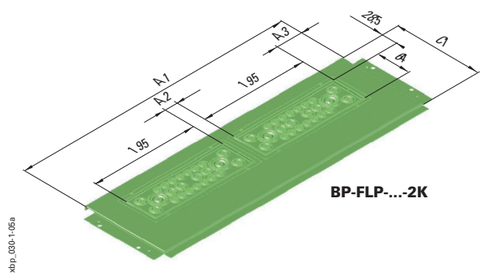

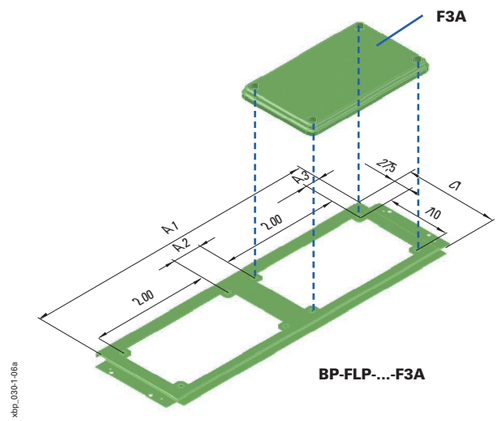

	Description	Type Designation	Cat. No.	Units per package
	F3A-2K Flanges			
	• For IP55 applications, used for all type of distribution boards • NEW flange series based on 2-component-technology • Material compound of polyamide (PA - RAL 7035) and thermoplastic elastomer (TPE - RAL 7001)			
501496_BK	Blind flange without knock-outs	F3A-2K-0	EP-501496	1
501497_BK 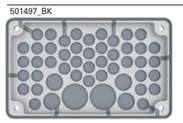	Membrane flange (push-through cable entry) 44 cables Ø 3-14mm 4 cables Ø 3-21mm 2 cables Ø 3-30mm	F3A-2K-D30/3	EP-501497	1
501498_BK 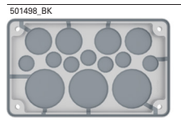	Membrane flange (push-through cable entry) 7 cables Ø 3-20mm 4 cables Ø 3-32mm 3 cables Ø 3-50mm	F3A-2K-D50/3	EP-501498	1
501499_BK 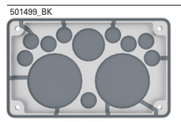	Membrane flange (push-through cable entry) 9 cables Ø 3-20mm 1 cable Ø 3-40mm 2 cables Ø 3-70mm	F3A-2K-D70/3	EP-501499	1
501500_BK 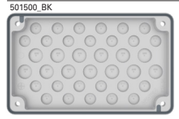	Blind flange with knock-outs 24 cable glands M16 13 cable glands M20	F3A-2K-M20/16	EP-501500	1
501501_BK 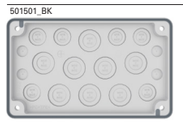	Blind flange with knock-outs 4 cable glands M16 6 cable glands M25/16 8 cable glands M32/20	F3A-2K-M32/16	EP-501501	1
501502_BK 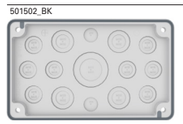	Blind flange with knock-outs 2 cable glands M20 8 cable glands M25/16 4 cable glands M32/20 1 cable gland M50/32	F3A-2K-M50/16-1	EP-501502	1
501503_BK 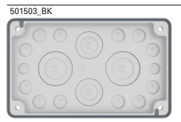	Blind flange with knock-outs 2 cable glands M16 12 cable glands M20 2 cable glands M40/25 2 cable glands M50/32	F3A-2K-M50/16-2	EP-501503	1

	Description	Colour	Type Designation	Cat. No.	Units per package
	F3A-XP Flanges				
	• For IP55 applications, used for all type of distribution boards • Metal flange plates, powder-coated sheet steel 2 mm, RAL 7035				
vt09208	Blind flange sheet-steel		F3A-XP	113426	1
vt13118 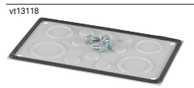	Steel sheet with knockouts 9xM20, 2xM40/M32, 2xM50/M40		F3A-XP-M50/40	187862	1
vt13018 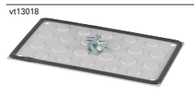	Steel sheet with knockouts 10xM16, 12xM20		F3A-XP-M20/16	187863	1
vt06320	Steel sheet with membrane flange insert made of thermoplastic elastomer (TPE) 9 cables ø 18-30 mm 4 cables ø 10-15 mm 4 cables ø 5-10mm		F3A-XP-2K/17	300956	1
	Sheet metal flange plate as a ventilation hood				
	• For IP30 applications				
VT28210	Flange with ventilating		F3A-V	149194	1
	Adapter plate for external cable entry boxes				
	• Standard boxes type CI-KST32/34 of Ci-assortment (incl. accessories) can be used • Especially to terminate bigger incoming cables outside of the cabinet to keep required space for modular units / devices internally • For IP55 applications				
vt04618	Flange with sealing		F3A-KST32/34	193692	1
	Spare part flanges, smaller size for IP30 applications				
	• Pass-through flange for diverse wire cross-section, for IP30 applications				
wa_vt07113	14 cables Ø 11 mm 8 cables Ø 15 mm 2 cables Ø 28 mm		ZSD-2K/FLA	272166	1
	• Material: sheet steel, powder-coated, RAL7035 / RAL9016, thickness 1 mm				
vt28717		RAL 7035	2K/BLIND	151178	1
		RAL 9016	2K/BLIND-W	151352	1

Side panels BP-SP

- Side panels are used as part of cover for the cabinet
- 1 variant (for base frame assembly, order 1 pair PSN-FPS separately)
- Material: sheet steel, powder-coated, RAL 7035 or RAL 9016 thickness 1 mm
- Delivered as: 2 side panels

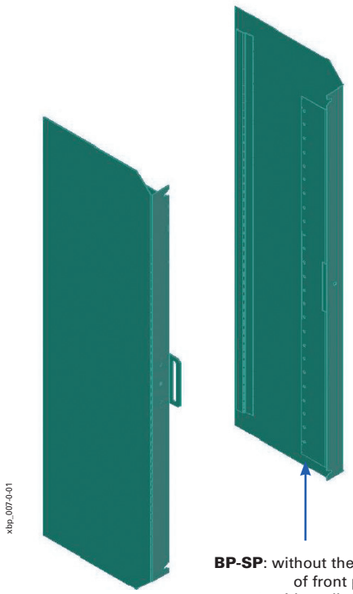

BP-SP: without the bend, mounting of front plates onto side walls PSN-MSW or PSN-FPS.

Board without a possibility of installation of mounting frame PSN-MSW

- Without side wall PSN-MSW

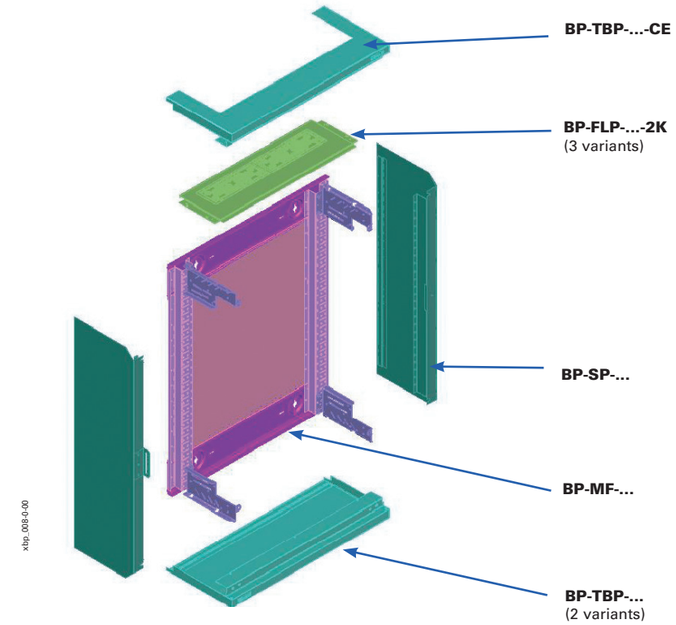

Mounting process:

- Mounting of towers BPZ-CTS-L onto base frame BP-MF. Towers BPZ-CTS-L are in a Delivered as of the frame BP-MF.

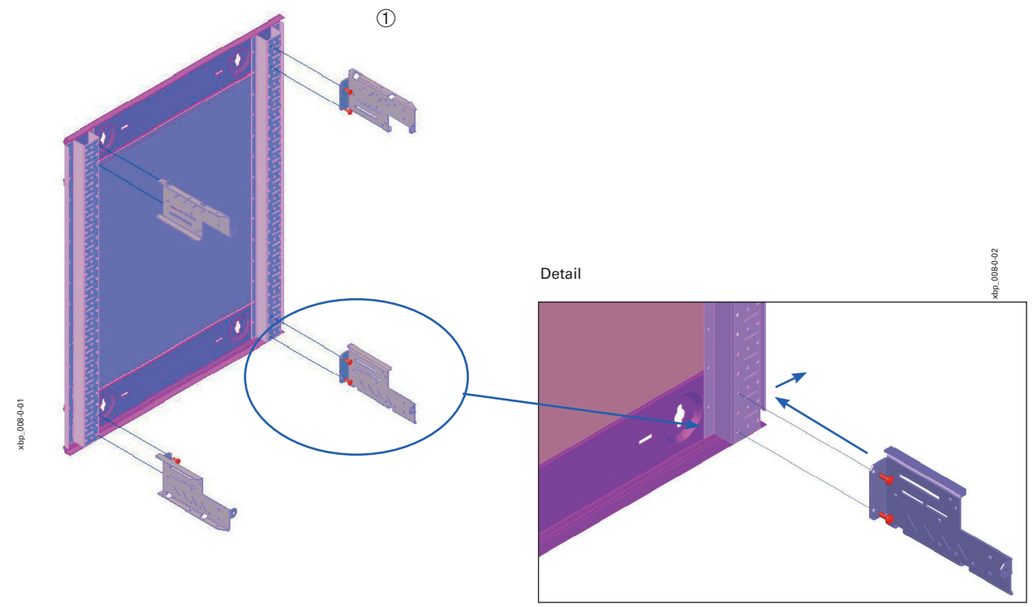

Board without a possibility of installation of mounting frame PSN-MSW

2. Assembly of cable entry plates BP-FLP onto towers BPZ-CTS-L
3. Assembly of top / bottom panel without cutout (if used)
4. Fixing of top / bottom panel without cutout into towers BPZ-CTS-L by means of screws
5. Addition of cable entry plate with top / bottom panel
6. Fixing of top / bottom panel with cutout into towers BPZ-CTS-L by means of screws
7. Assembly of side panels BP-SP
8. Fixing of side panels BP-SP

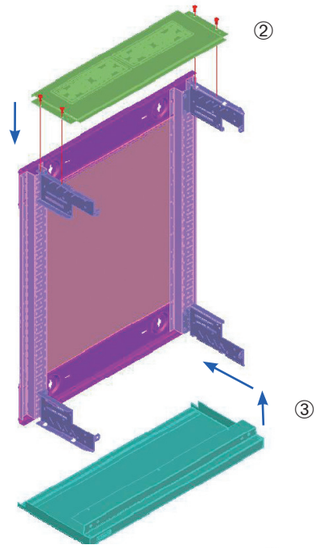

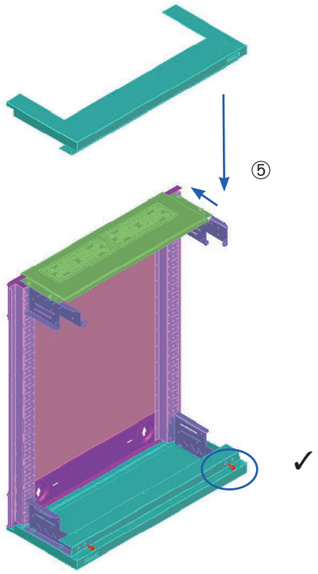

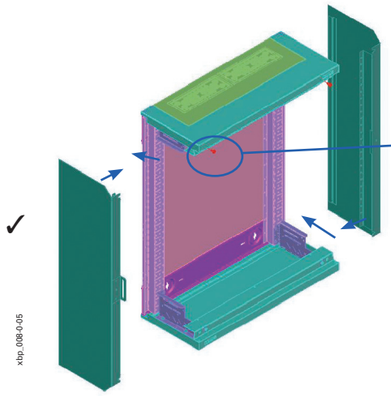

Detail

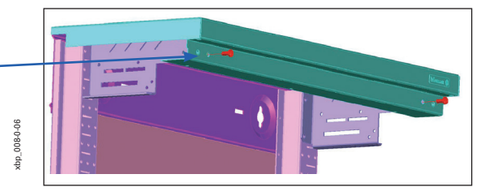

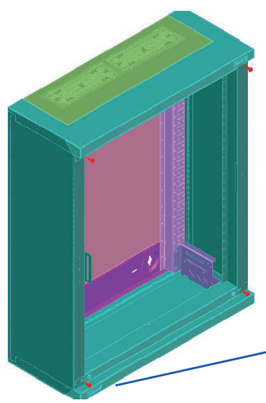

Detail

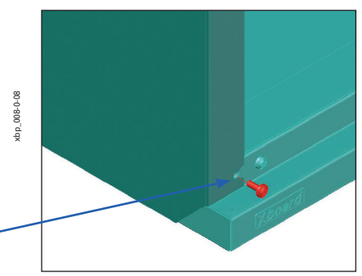

Board for installation of mounting frame PSN-MSW

- Incl. side wall PSN-MSW

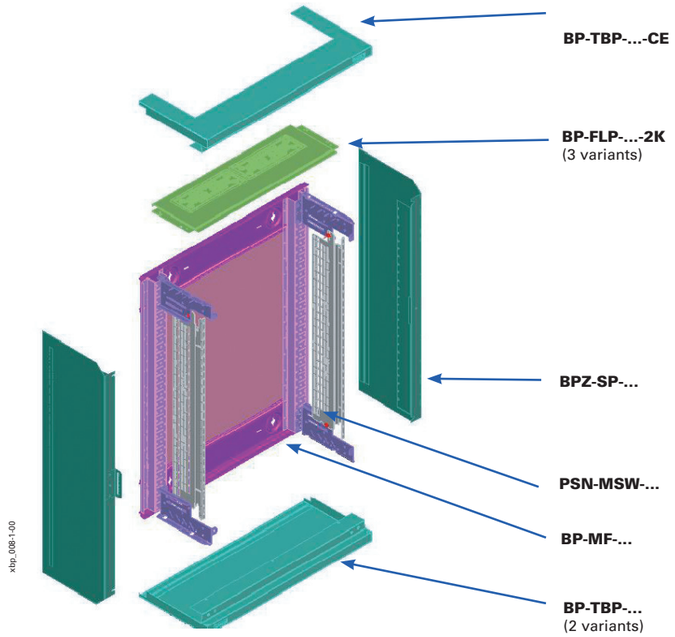

Board for installation of mounting frame PSN-MSW

Mounting process

1. Mounting of towers BPZ-CTS-L onto base frame BP-MF. Towers BPZ-CTS-L are in a Delivered as of the frame BP-MF.
2. Pre-screwing of a screw which creates bottom hitch for frame PSN-MSW.
3. Placing of the frame from side walls PSN-MSW on bottom hitch
4. Tipping of the side walls PSN-MSW to correct position
5. Fixing of the frame with top hitch screw

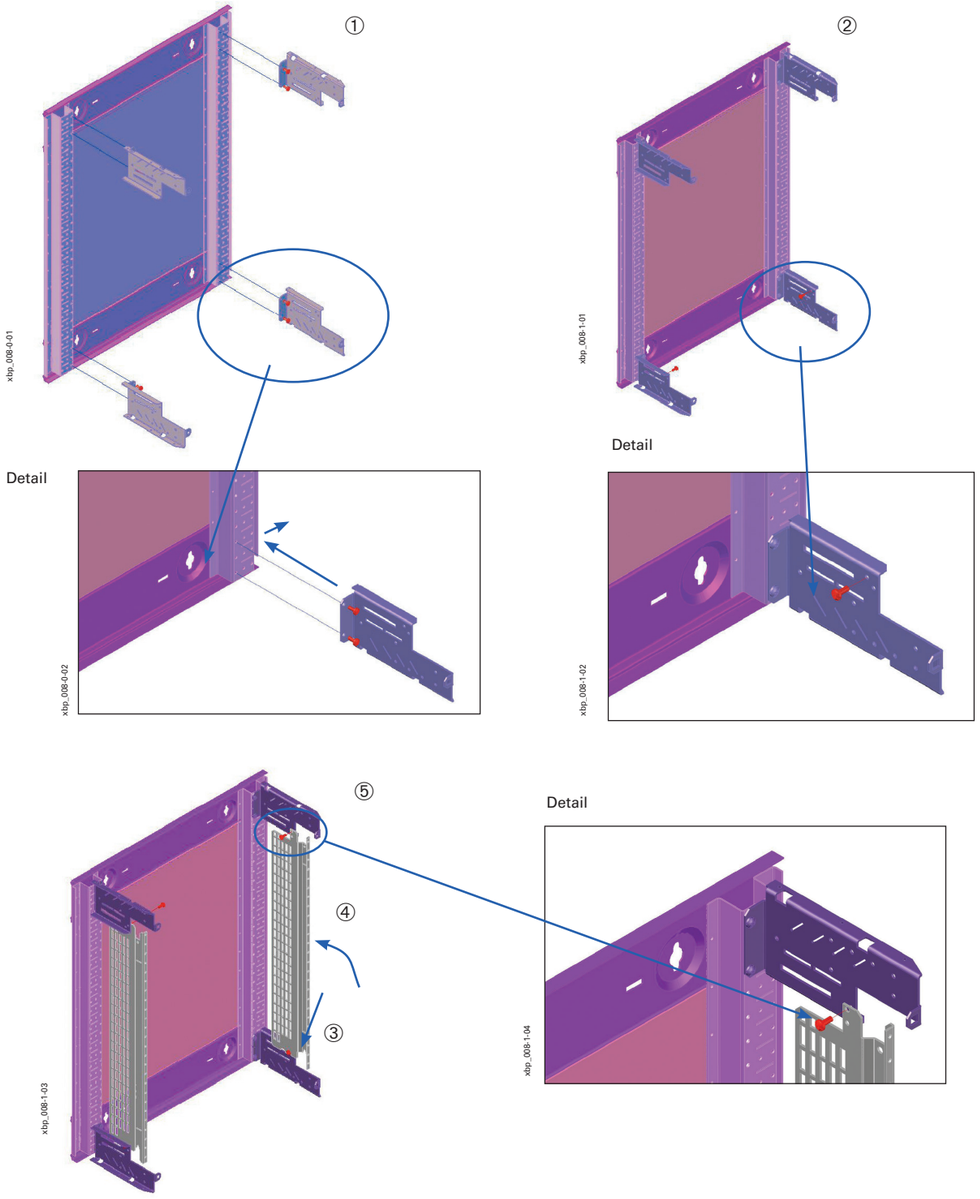

Board for installation of mounting frame PSN-MSW

6. Assembly of cable entry plates BP-FLP onto towers BPZ-CTS-L
7. Assembly of top / bottom panel without cutout (if used)
8. Fixing of top / bottom panel without cutout into towers BPZ-CTS-L by means of screws
9. Addition of cable entry plate with top / bottom panel
10. Fixing of top / bottom panel with cutout into towers BPZ-CTS-L by means of screws
11. Assembly of side panels BPZ-SP-MSW
12. Fixing of side panels BPZ-SP-MSW

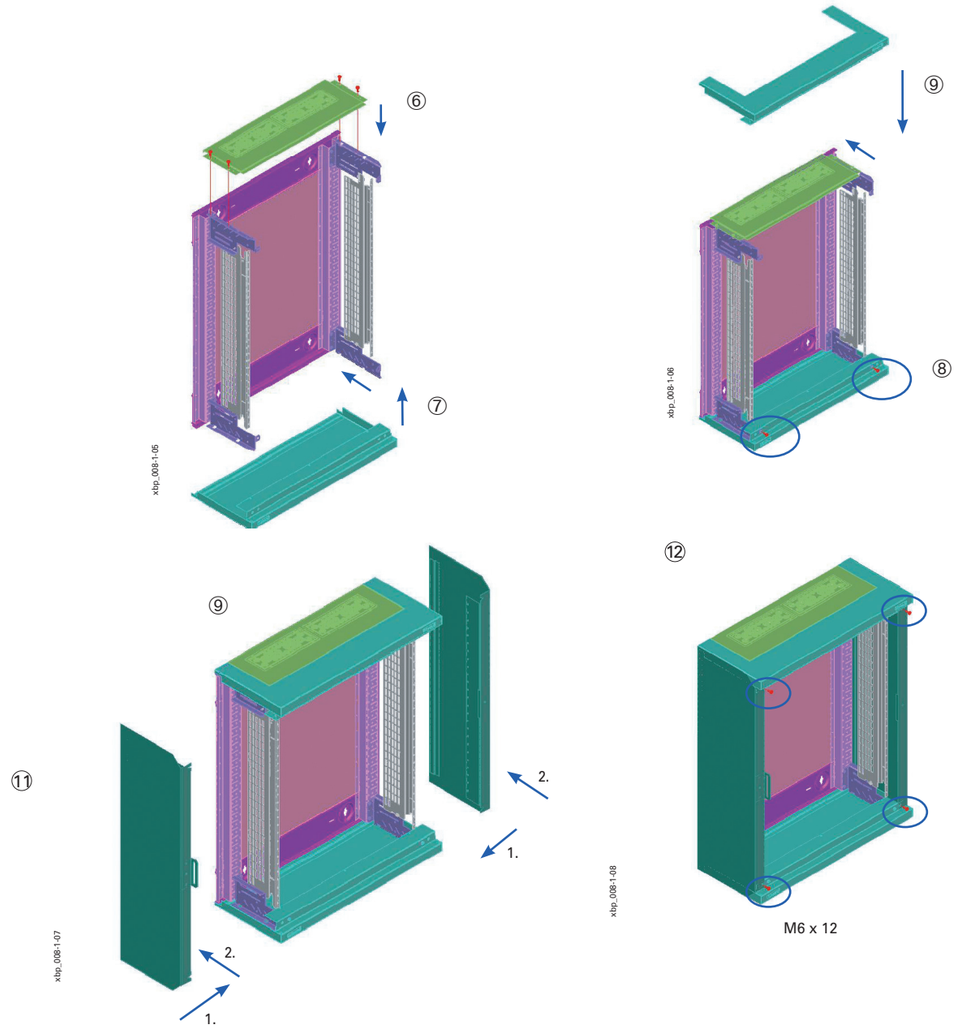

Front Plate Support, PSN-FPS

- For fixing the front plates
- Mounting of front plates without using PSN-MSW
- Enables combination of an installation section with and without MSW in one board
- For mounting of floor standing distribution boards flexible assembly BP-F-...F
- Material: 2 mm sheet steel, galvanized
- Scope of delivery: 1 Pair of front plate supports, fixing material

Corner tower set, BPZ-CTS

- Mounted directly on the system perforation pattern of the base frame BP-MF
- For fixing the terminal support bar BPZ-TSB
- For fixing the mounting side walls PSN-MSW
- If towers BPZ-CTS-S are mounted for short side walls PSN-MSW, it is necessary to pay attention to correct orientation of the towers. The square cutout in tower bend has to be on the other side to PSN-MSW.
- Scope of delivery: 1 pair of towers (for left and right side), fixing material
- Mounting position:

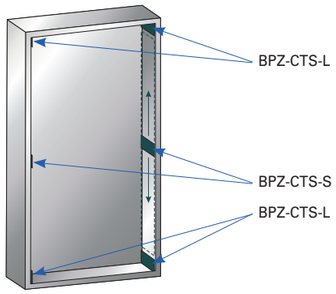

Detail

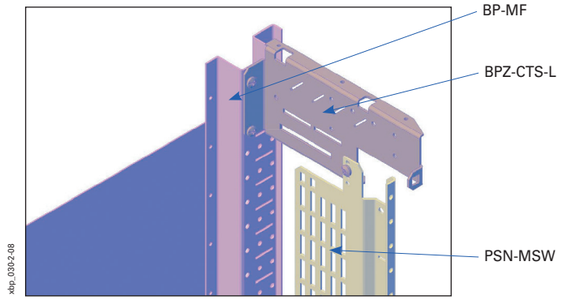

Detail

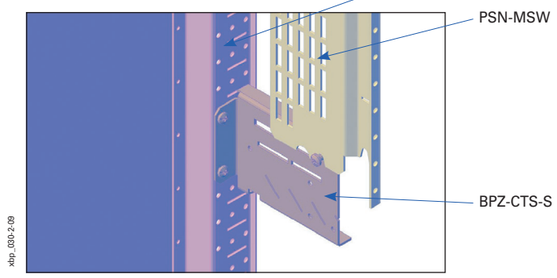

Set, BPZ-SNAP-MSW-CTS

- Designed for comfort inserting and fixing PSN-MSW with use BPZ-SNAP to board
- Used for surface mounted boards BP-O, BPM-O and floor-standing boards BP-F, BPM-F
- Set contains top and bottom parts

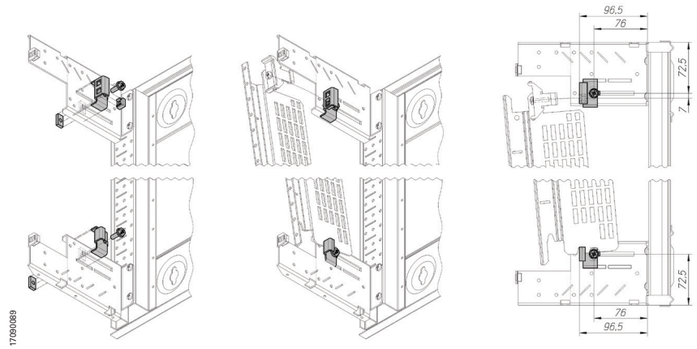

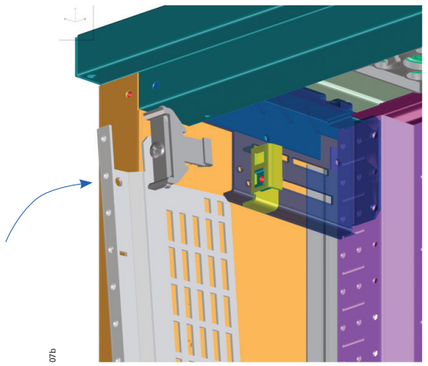

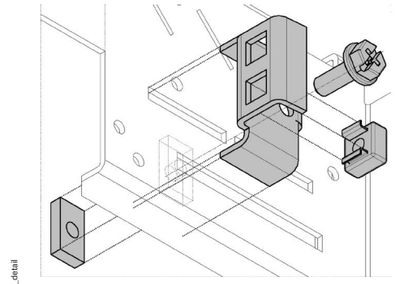

Mounting side walls, PSN-MSW

- Designed for comfort inserting and fixing PSN-MSW with use BPZ-SNAP to board
- Mounting side walls for flush mounting boards
- Can be used also for surface mounting or floor standing boards for comfortable mounting of installation devices
- Enables mounting of inside equipment including electrical connection outside the board
- Material: Sheet steel, zinc-coated
- Scope of delivery: 2 mounting side walls

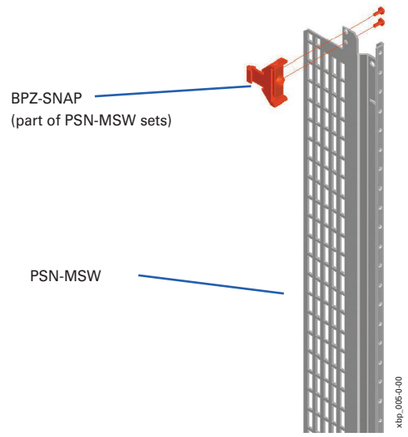

Mounting of devices with a possibility of controlling

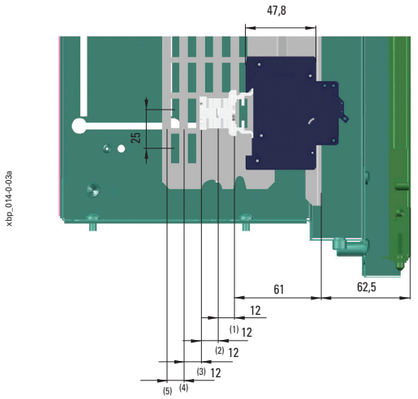

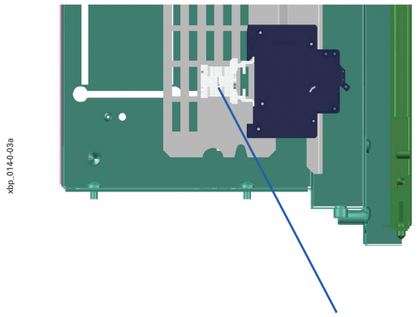

Device rail in depth (2)

Mounting of devices under frontplate (e.g. contactors without a possibility of manual controlling)

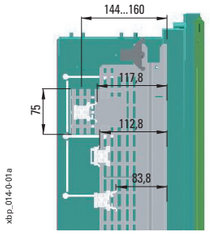

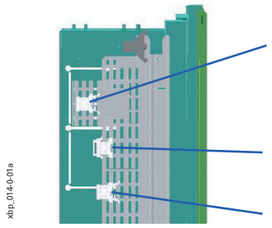

Device rail in depth (2) mounted with TIW-1 (mounting depth can be smoothly adjusted)

Device rail in depth (5) mounting onto rear side of BEL

Device rail in depth (5)

Mounting of devices onto mounting plate

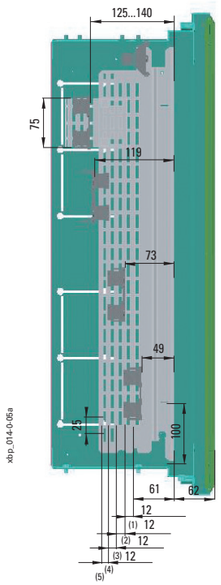

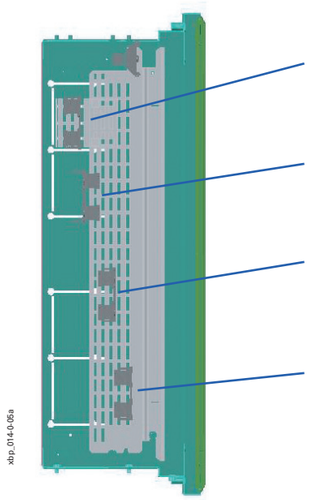

Device rail in depth (1) mounted with TIW-1 (devices with high installation depth, mounting depth can be smoothly adjusted)

Mounting plate in depth (5) mounted onto turned BEL (devices with high installation depth)

Mounting plate in depth (3) (devices with medium installation depth)

Mounting plate in depth (1) (devices with low installation depth)

Mounting of fuse disconnectors LTS

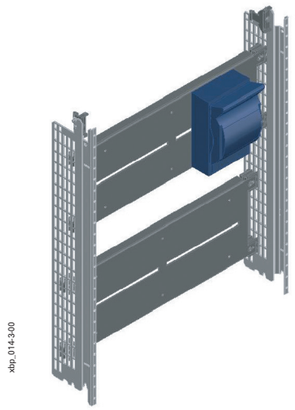

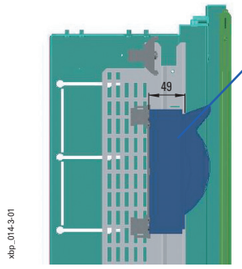

Fuse disconnector size 00:
Mounting plate BPZ-MPL180-...
in depth (1)
(mounting depth 49 mm)

Fuse disconnector size 1:
Mounting plate BPZ-MPL350-...
in depth (3)
(mounting depth 73 mm)

Fuse disconnector size 2:
Mounting plate BPZ-MPL350-...
in depth (4)
(mounting depth 85 mm)

Mounting of moulded case circuit breakers NZM1

- Mounting sets BPZ-NZM...-MSW are recommended for mounting of single breakers NZM1 and NZM2 into flush mounting boards

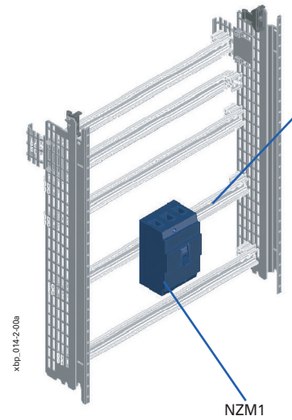

Mounting onto device rail in depth (4) (the breaker is fastened with adaptor NZM1-XC35).

It is necessary to pay attention to mechanical load of device rail – dangerous of twisting if more MCCBs is installed.
In this case it is recommended to use reinforcement by means of another device rail (mounted behind the first one, the rear second rail has to be shortened appropriatelly).

To cover, a front plate BPZ-FP-...-45 with 45 mm cutout can be used.

Reinforcement of the device rail

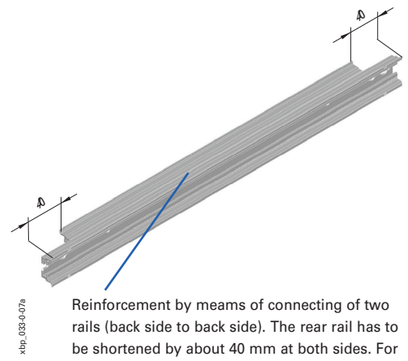

Reinforcement by meams of connecting of two rails (back side to back side). The rear rail has to be shortened by about 40 mm at both sides. For connecting, the pre-drilled holes can be used.

Detail

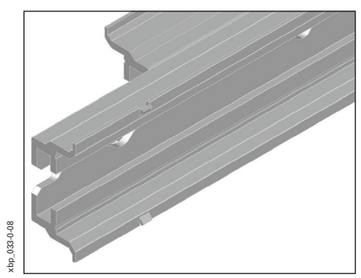

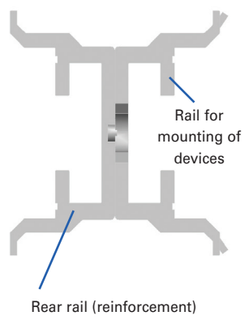

Zero position for mounting of front plates

- Defines lower edge of the first bottom front plate - first step of assembly
- For standard front plate height 150 mm, the center of the first bottom device rail is located 75 mm above the zero position

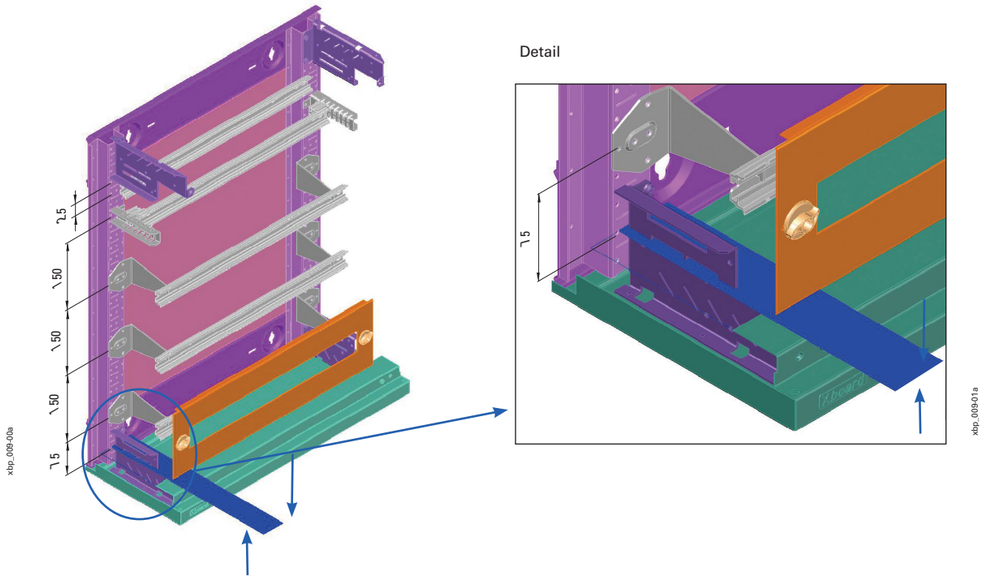

Zero position for mounting of device rails and front plates
(the second opening from the bottom)
Defines lower edge of bottom front plate

Mounting of device rails

I. Rear mounting onto base frame

II. Mounting onto side walls PSN-MSW

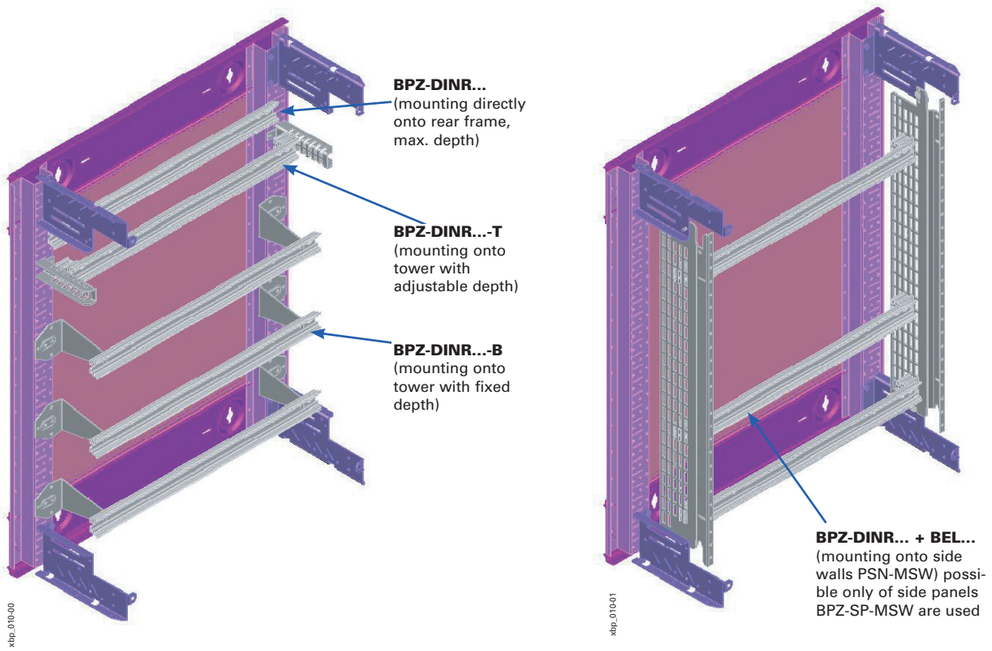

Sheet steel doors, BP-DS

- Front-mounted
- Quick mounting and removing of the door
- Right or left hinged
- Opening angle 167°
- 1-point lock through rotary lock, 3-point lock with clip down handle
- Material: sheet steel, powder-coated, RAL 7035 thickness 1 mm
- Delivered as: 1 door, set for earth connection

Transparent doors (sheet steel), BP-DT

- Material: 2 mm of plexiglas

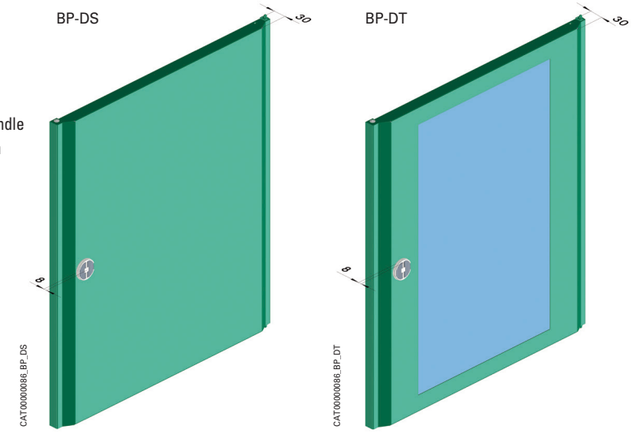

Mounting of door BP-DS

Mounting process:

1. Mounting of lug for lock rod on the respective side (in Delivered as of side panels)
2. Inserting of door at the opening angle about 90°
3. Inserting of hinge pins
4. Fixing of the pins in plastic bracket

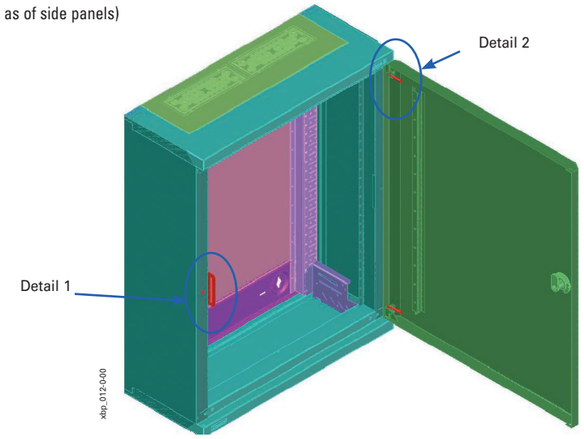

Detail 1

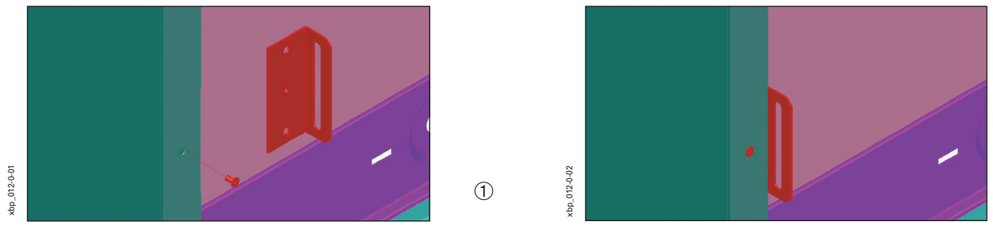

Detail 2

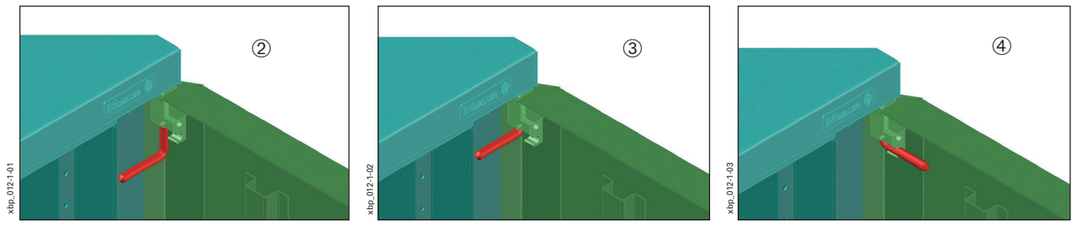

Horizontal/middle add-on connection element, BP-MFL

- For mounting distribution boards one on top of the other
- For surface mounting boards IP30
- Possible to combine with BP-MSL for cross combination of boards
- Material: sheet steel, powder-coated, RAL 7035
- Delivered as: 1 horizontal/middle add-on connection element,
  2 mounting elements, fixing material

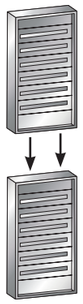

Mounting process:

- For a pair of boards, only one set of top / bottom panels is used

1. Placing of base frames BP-MF to correct possition
2. Remove of screws of towers BPZ-CTS-L at sides near to boards connection
3. Put of mounting elements on the loosened screws
4. Tightening of fixing screws
5. Assembly of connection element
6. Fixing of connection element
7. Mounting of top and bottom panels BP-TBP
8. Mounting of side walls BP-SP, BPZ-SP-MSW
9. Mounting of doors BP-DS

Detail

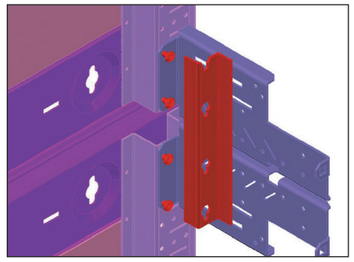
xbp_0211-04

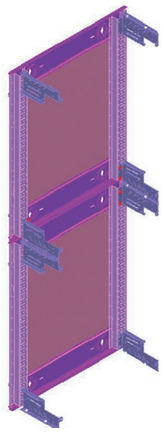
xbp_021-1-01

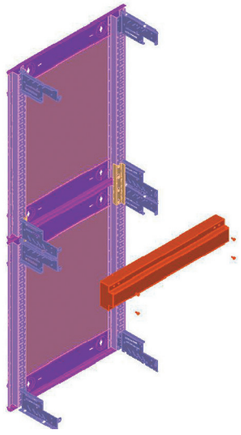
xbp_021-1-07

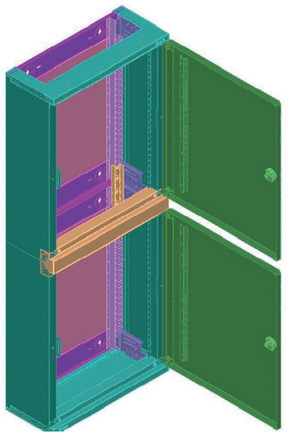
xbp_021-1-13

Vertical/middle add-on connection element, BP-MSL

- For mounting distribution boards one next to the other (in parallel)
- Possible to combine with BP-MFL for cross combination of boards
- Material: sheet steel, powder-coated, RAL 7035
- Delivered as: 1 vertical/middle add-on connection element,
  2 mounting elements, fixing material

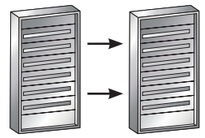

Mounting process:

- The process is identical for both BP-MSL and BP-MSL
- For a pair of boards, only one set of side panels BP-SP is used
- For base frame assembly 1 pair PSN-FPS to be ordered separately

1. Placing of base frames BP-MF to correct possition, pre-screwing of fixing screws
2. Put of mounting elements and fixing of screws
3. Mounting of towers BPZ-CTS-L onto base frame BP-MF. Towers BPZ-CTS-L are in a Delivered as of the frame BP-MF.
4. Mounting of top and bottom panels BP-TBP and pre-screwing of add-on connection element screws. Assembly of add-on element
5. Connected pair of boards. Mounting of lugs for locks rods
6. Mounting of doors

To preserve maximum opening angle, both boards have to have opposite direction of door opening

①

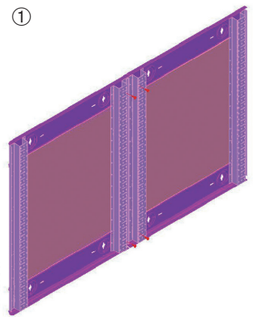
xbp_021-0-01

②

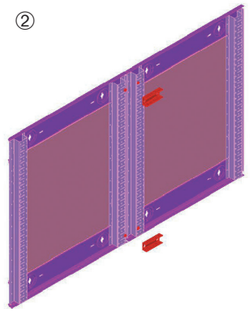
xbp_021-0-03

③

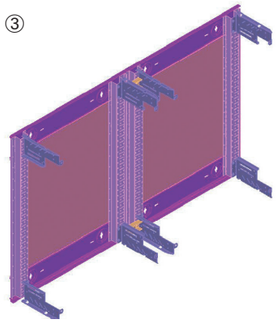
xbp_021-0-06

④

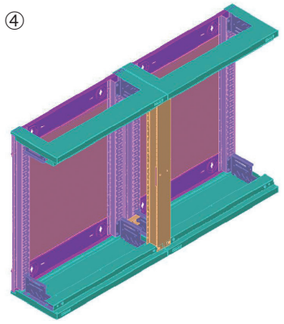
xbp_021-0-11

⑤

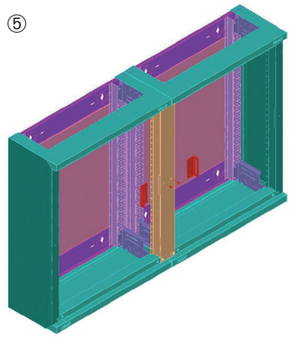
xbp_021-0-14

⑥

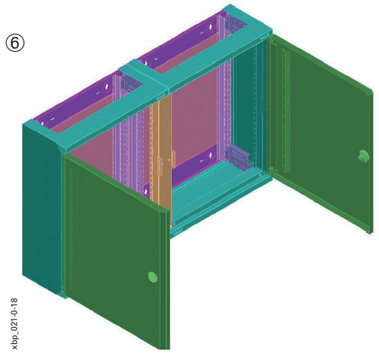
xbp_021-0-18

Separation panel, BPZ-ASB

- Internal vertical separation between two sections
- Fixing on the rear frame
- Painted, RAL 7035 grey

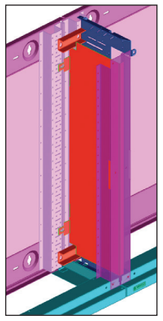
03

System Overview

BPM-O-..., IP55

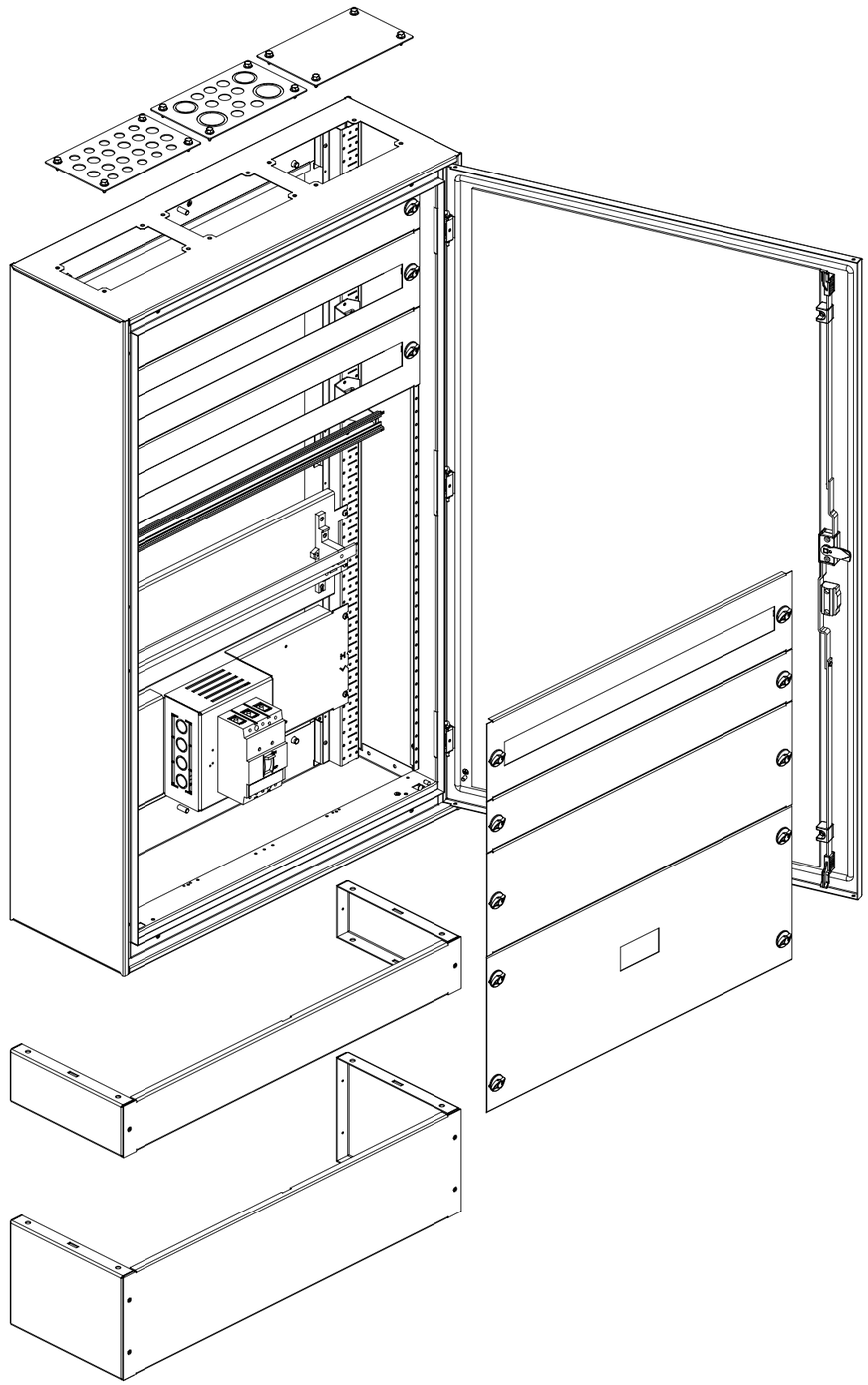

xEnergy Distribution Boards

Surface-mounted distribution board BPM-O-..., IP55

xEnergy Basic
Sheet 1/3

wa_vt08514

vt40917

vt39617

vt104414

Width [mm]	Height [mm]	Height int. [mm]	Pre-assembled configuration/ individual installation/ prepared for F3A-flanges on top door with two-way key bit BPZ-LOCK/DBIT3		Pre-assembled configuration/ individual installation/ prepared for F3A-flanges on top door with rotary lever BPZ-SH-L(-1P)		Pre-assembled configuration / Individual installation / Prepared for F3A-flanges on top / Without door
			RAL 7035 grey empty	RAL 9016 white empty	RAL 7035 grey empty	RAL 9016 white empty	RAL 7035 grey Empty
			Cat No per unit unit = 1 pc.		Cat No per unit unit = 1 pc.		Cat No per unit unit = 1 pc.
BPM-O-..., IP55 - fully assembled							
400 (13MU/row)	460	350	**BPM-O-400/4** 110837	**BPM-O-400/4-W** 111057	**BPM-O-400/4-P** 116653	**BPM-O-400/4-P-W** 300876	-
	760	650	**BPM-O-400/7** 110838	**BPM-O-400/7-W** 111058	**BPM-O-400/7-P** 116654	**BPM-O-400/7-P-W** 300877	-
	1060	950	**BPM-O-400/10** 110839	**BPM-O-400/10-W** 111059	**BPM-O-400/10-P** 116655	**BPM-O-400/10-P-W** 300878	-
	1260	1150	**BPM-O-400/12** 111020	**BPM-O-400/12-W** 111060	**BPM-O-400/12-P** 116656	**BPM-O-400/12-P-W** 300879	-
	1560	1450	**BPM-O-400/15** 111021	-	**BPM-O-400/15-P** 116657	**BPM-O-400/15-P-W** 300880	-
600 (24MU/row)	460	350	**BPM-O-600/4** 111022	**BPM-O-600/4-W** 111062	**BPM-O-600/4-P** 116658	**BPM-O-600/4-P-W** 300881	-
	760	650	**BPM-O-600/7** 111023	**BPM-O-600/7-W** 111063	**BPM-O-600/7-P** 116659	**BPM-O-600/7-P-W** 300882	**BPM-O-600/7-F** 174358
	1060	950	**BPM-O-600/10** 111024	**BPM-O-600/10-W** 111064	**BPM-O-600/10-P** 116660	**BPM-O-600/10-P-W** 300883	**BPM-O-600/10-F** 174359
	1260	1150	**BPM-O-600/12** 111025	**BPM-O-600/12-W** 111065	**BPM-O-600/12-P** 116661	**BPM-O-600/12-P-W** 300884	**BPM-O-600/12-F** 174360
	1560	1450	**BPM-O-600/15** 111026	-	**BPM-O-600/15-P** 116662	**BPM-O-600/15-P-W** 300885	**BPM-O-600/15-F** 174361
800 (35MU/row)	460	350	**BPM-O-800/4** 111027	**BPM-O-800/4-W** 111067	**BPM-O-800/4-P** 116663	**BPM-O-800/4-P-W** 300886	-
	760	650	**BPM-O-800/7** 111028	**BPM-O-800/7-W** 111068	**BPM-O-800/7-P** 116664	**BPM-O-800/7-P-W** 300887	-
	1060	950	**BPM-O-800/10** 111029	**BPM-O-800/10-W** 111069	**BPM-O-800/10-P** 116665	**BPM-O-800/10-P-W** 300888	**BPM-O-800/10-F** 174364
	1260	1150	**BPM-O-800/12** 111030	**BPM-O-800/12-W** 111070	**BPM-O-800/12-P** 116666	**BPM-O-800/12-P-W** 300889	**BPM-O-800/12-F** 174365
	1560	1450	**BPM-O-800/15** 111031	-	**BPM-O-800/15-P** 116667	**BPM-O-800/15-P-W** 300890	**BPM-O-800/15-F** 174366
1000 (46MU/row)	1060	950	**BPM-O-1000/10** 111032	**BPM-O-1000/10-W** 111072	**BPM-O-1000/10-P** 116668	**BPM-O-1000/10-P-W** 300891	**BPM-O-1000/10-F** 193229
	1260	1150	**BPM-O-1000/12** 111033	**BPM-O-1000/12-W** 111073	**BPM-O-1000/12-P** 116669	**BPM-O-1000/12-P-W** 300892	**BPM-O-1000/12-F** 193230
	1560	1450	**BPM-O-1000/15** 111034	-	**BPM-O-1000/15-P** 116670	**BPM-O-1000/15-P-W** 300893	**BPM-O-1000/15-F** 174369
1200 (57MU/row)	1260	1150	**BPM-O-1200/12** 111035	**BPM-O-1200/12-W** 111075	**BPM-O-1200/12-P** 116671	**BPM-O-1200/12-P-W** 300894	**BPM-O-1200/12-F** 193231
	1560	1450	**BPM-O-1200/15** 111036	-	**BPM-O-1200/15-P** 116672	**BPM-O-1200/15-P-W** 300895	**BPM-O-1200/15-F** 193232

xEnergy Basic
Sheet 2/3

vt104914

vt33914

vt06905, wa_vt51413

EP-502144_L

EP-502137_L

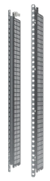

EP-502577_L

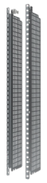

Blatt metal door / Clip-down handle	Blatt metal door (transparent) / Clip-down handle	Plinth 100 mm / Side parts 1 pair / Front cover		Installation back frame / Frontplate support	MSW installation / Mounting Side Wall (MSW) with standard depth	MSW installation / Mounting Side Wall (MSW) with extended depth
RAL 7035 grey	RAL 7035 grey	RAL 7035 grey	RAL 9016 white			
Cat No per unit unit = 1 pc.	Cat No per unit unit = 1 pc.	Cat No per unit unit = 1 pc.	Cat No per unit unit = 1 pc.	Cat No per unit unit = 1 pc.	Cat No per unit unit = 1 pc.	Cat No per unit unit = 1 pc.
-	**BPZ-DMT-400/4-P** 173575	**BPZ-SS-1/270** 119167	**BPZ-SS-1/270-W** 119173	**PSN-FPS/4** EP-502142	**PSN-MSW/4** EP-502135	**PSN-MSW/4-EXT** EP-502575
-	**BPZ-DMT-400/7-P** 173576	**BPZ-FS-400/1** 293493	**BPZ-FS-400/1-W** 293494	**PSN-FPS/7** EP-502143	**PSN-MSW/7** EP-502136	**PSN-MSW/7-EXT** EP-502576
-	**BPZ-DMT-400/10-P** 173577			**PSN-FPS/10** EP-502144	**PSN-MSW/10** EP-502137	**PSN-MSW/10-EXT** EP-502577
-	**BPZ-DMT-400/12-P** 173578			**PSN-FPS/12** EP-502145	**PSN-MSW/12** EP-502138	**PSN-MSW/12-EXT** EP-502578
-	**BPZ-DMT-400/15-P** 173579			**PSN-FPS/15** EP-502146	**PSN-MSW/15** EP-502139	**PSN-MSW/15-EXT** EP-502579
-	**BPZ-DMT-600/4-P** 173580	**BPZ-SS-1/270** 119167	**BPZ-SS-1/270-W** 119173	**PSN-FPS/4** EP-502142	**PSN-MSW/4** EP-502135	**PSN-MSW/4-EXT** EP-502575
BPZ-DMS-600/7-P 174372	**BPZ-DMT-600/7-P** 173581	**BPZ-FS-600/1** 293497	**BPZ-FS-600/1-W** 293498	**PSN-FPS/7** EP-502143	**PSN-MSW/7** EP-502136	**PSN-MSW/7-EXT** EP-502576
BPZ-DMS-600/10-P 174373	**BPZ-DMT-600/10-P** 173582			**PSN-FPS/10** EP-502144	**PSN-MSW/10** EP-502137	**PSN-MSW/10-EXT** EP-502577
BPZ-DMS-600/12-P 174374	**BPZ-DMT-600/12-P** 173583			**PSN-FPS/12** EP-502145	**PSN-MSW/12** EP-502138	**PSN-MSW/12-EXT** EP-502578
BPZ-DMS-600/15-P 174341	**BPZ-DMT-600/15-P** 173584			**PSN-FPS/15** EP-502146	**PSN-MSW/15** EP-502139	**PSN-MSW/15-EXT** EP-502579
-	**BPZ-DMT-800/4-P** 173587	**BPZ-SS-1/270** 119167	**BPZ-SS-1/270-W** 119173	**EP-502146** EP-502142	**PSN-MSW/4** EP-502135	**PSN-MSW/4-EXT** EP-502575
-	**BPZ-DMT-800/7-P** 173588	**BPZ-FS-800/1** 293501	**BPZ-FS-800/1-W** 293502	**PSN-FPS/7** EP-502143	**PSN-MSW/7** EP-502136	**PSN-MSW/7-EXT** EP-502576
BPZ-DMS-800/10-P 174344	**BPZ-DMT-800/10-P** 173589			**PSN-FPS/10** EP-502144	**PSN-MSW/10** EP-502137	**PSN-MSW/10-EXT** EP-502577
BPZ-DMS-800/12-P 174345	**BPZ-DMT-800/12-P** 173590			**PSN-FPS/12** EP-502145	**PSN-MSW/12** EP-502138	**PSN-MSW/12-EXT** EP-502578
BPZ-DMS-800/15-P 174346	**BPZ-DMT-800/15-P** 173591			**PSN-FPS/15** EP-502146	**PSN-MSW/15** EP-502139	**PSN-MSW/15-EXT** EP-502579
BPZ-DMS-400/10-L+BPZ-DMS-600/10-R-P 193233 + 193234	**BPZ-DMT-400/10-L+BPZ-DMT-600/10-R-P** 193241+193242	**BPZ-SS-1/270** 119167	**BPZ-SS-1/270-W** 119173	**PSN-FPS/10** EP-502144	**PSN-MSW/10** EP-502137	**PSN-MSW/10-EXT** EP-502577
BPZ-DMS-400/12-L+BPZ-DMS-600/12-R-P 193235 + 193237	**BPZ-DMT-400/12-L+BPZ-DMT-600/12-R-P** 193243+193245	**BPZ-FS-1000/1** 293505	**BPZ-FS-1000/1-W** 293506	**PSN-FPS/12** EP-502145	**PSN-MSW/12** EP-502138	**PSN-MSW/12-EXT** EP-502578
BPZ-DMS-400/15-L+BPZ-DMS-600/15-R-P 193238 + 193240	**BPZ-DMT-400/15-L+BPZ-DMT-600/15-R-P** 193246+193248			**PSN-FPS/15** EP-502146	**PSN-MSW/15** EP-502139	**PSN-MSW/15-EXT** EP-502579
BPZ-DMS-600/12-L+BPZ-DMS-600/12-R-P 193236 + 193237	**BPZ-DMT-600/12-L+BPZ-DMT-600/12-R-P** 193244+193245	**BPZ-SS-1/270** 119167	**BPZ-SS-1/270-W** 119173	**PSN-FPS/12** EP-502145	**PSN-MSW/12** EP-502138	**PSN-MSW/12-EXT** EP-502578
BPZ-DMS-600/15-L+BPZ-DMS-600/15-R-P 193239 + 193240	**BPZ-DMT-600/15-L+BPZ-DMT-600/15-R-P** 193247+193248	**BPZ-FS-1200/1** 293509	**BPZ-FS-1200/1-W** 293510	**PSN-FPS/15** EP-502146	**PSN-MSW/15** EP-502139	**PSN-MSW/15-EXT** EP-502579

wa_vt08514

vt02918, wa_vt51413

vt02818, vt02718

EP-502492_L

EP-502495_L

Width [mm]	Height [mm]	Height int. [mm]	Plinth 100 mm / Side parts 1 pair open-open for cable guiding between the sections / Front cover	Plinth 200 mm / Side parts 1 pair / Front cover		Internal cable duct as complete kit for shared composition incl. mounting pillars, compartment door and protective cover	
			RAL 7035 grey	RAL 7035 grey	RAL 7035 grey	RAL 7035 grey Compartment width 200 mm	Compartment width 400 mm
			Cat. No. per unit unit = 1 pc.	Cat. No. per unit unit = 1 pc.	Cat. No. per unit unit = 1 pc.	Cat. No. per unit unit = 1 pc.	Cat. No. per unit unit = 1 pc.
BPM-O-..., IP55 - fully assembled							
400 (13MU/row)	460	350	**BPZ-SS-1/270/SET/OO** 174352 **BPZ-FS-400/1** 293493	**BPZ-SS-2/270** 119171 **BPZ-FS-400/2** 293495	**BPZ-SS-2/270-W** 119175 **BPZ-FS-400/2** 293495	-	-
	760	650				-	-
	1060	950				-	-
	1260	1150				-	-
	1560	1450				-	-
600 (24MU/row)	460	350	**BPZ-SS-1/270/SET/OO** 174352 **BPZ-FS-600/1** 293497	**BPZ-SS-2/270** 119171 **BPZ-FS-600/2** 293499	**BPZ-SS-2/270-W** 119175 **BPZ-FS-600/2** 293499	-	-
	760	650				-	-
	1060	950				-	-
	1260	1150				-	-
	1560	1450				-	-
800 (35MU/row)	460	350	**BPZ-SS-1/270/SET/OO** 174352 **BPZ-FS-800/1** 293501	**BPZ-SS-2/270** 119171 **BPZ-FS-800/2** 293503	**BPZ-SS-2/270-W** 119175 **BPZ-FS-800/2** 293503	-	-
	760	650				-	-
	1060	950				-	-
	1260	1150				-	-
	1560	1450				**PSN-ICD-200/15-BL** EP-502492	-
1000 (46MU/row)	1060	950	**BPZ-SS-1/270/SET/OO** 174352 **BPZ-FS-1000/1** 293505	**BPZ-SS-1/270** 119167 **BPZ-FS-1000/2** 293507	**BPZ-SS-2/270-W** 119175 **BPZ-FS-1000/2** 293507	-	-
	1260	1150				-	-
	1560	1450				-	**PSN-ICD-400/15-BL** EP-502495
1200 (57MU/row)	1260	1150	**BPZ-SS-1/270/SET/OO** 174352 **BPZ-FS-1200/1** 293509	**BPZ-SS-1/270** 119167 **BPZ-FS-1200/2** 293511	**BPZ-SS-2/270-W** 119175 **BPZ-FS-1200/2** 293511	-	-
	1560	1450				-	-

Description

BPM-O..., IP55, enclosure depth 270 mm

- Complete cabinets prepared for ProfiSNAP installation system
- Degree of protection IP55
- Impact resistance IK10
- Protection class I (protective earth)
- Cable entry prepared for F3A flange
- The enclosure can be rotated by 180°
- Quick and easy change of the hinge direction, door opening angle 100°
- Two-way key bit or swing handler
- Direct wall mounting possible, wall-fixing brackets optionally included in the accessories
- Enclosure made from powder-coated sheet steel, RAL 7035 / RAL 9016
- Variable interior installation either with "Mounting base frame" or "Mounting side panel" (MSW)

Technical data

	BPM-O...
Electrical	
Type conforms to	IEC/EN 62208
Protection class	I (protective earth)
Degree of protection	IP55 (closed version with door/flansche) IP2XC (open door, the installation level is properly protected with EP covers)
Impact resistance	IK10
Rated operational voltage	415 VAC / 50 Hz
Rated current	Max. 630 A (depending on the type of incoming circuit breaker or the busbar system being used)
Earthing concept for the enclosure	
Main earthing	By means of M8 welding bolts
Door earthing	By means of M6 welding bolts

The permissible temperature increases for switchgear assemblies with a rated current of up to 630 A can be evaluated in accordance with section 10.10.4.2 of IEC/EN 61439-1.

For the maximum permissible heat dissipation for all devices inside the distribution board at an ambient temperature of 35° C and ΔT of 20 K / 35 K at an enclosure height of 75 %, please refer to the table on enclosure dimensions; (calculation method acc.to IEC/TR 60890).

Mechanical	
Enclosure	Excellent stability thanks to the welded construction
Material	Sheet steel 1.25 mm, phosphated and polyester powder coated (structured) with corrosion protection
Colour	Traffic white, RAL 9016 / Light grey RAL 7035
Door	With encircling foamed sealing, hinges on the inside, door opening angle ~100° Doors with transparent window individually configurable, hinged either left or right Width 1000 / 1200 mm in double-wing design
Type	Flexible interior fitting with installation units ProfiSNAP on base frame or „mounting side panel" (MSW) Mounting base frame: multi-layer construction, installation directly in the enclosure, robust and structured Mounting side panel (MSW): removable mounting insert, external installation, fast and reliable
Locking mechanism	Standard locking with two-way key bit (metal) respectively swing handler (optional lock cylinder as accessory) Three-point locking mechanism from height 1060 mm (one-point respectively two-point at height 460 / 760 mm)
Cable entry	Open, prepared for F3A flanges on one sides (top/bottom)
Ambient condition	Indoor installation (wall mounting) Max. ambient temperature +40° C Min. ambient temperature -5° C
Halogen-free, RoHS	< 1%, yes
Accessories	Wall-fixing brackets for wall mounting, a 100/200 mm base if used as a floor-standing cabinet, Lock cylinder as insert for swing handler, several F3A flanges for cable entry
Delivered as	Complete cabinet prepared for „Mounting base frame" or „MSW" (depending on interior fitting all corresponding parts for „Mounting base frame" respectively „MSW" have to be ordered separately)

Dimensions (mm)

BPM-O..., IP55, enclosure depth 270 mm

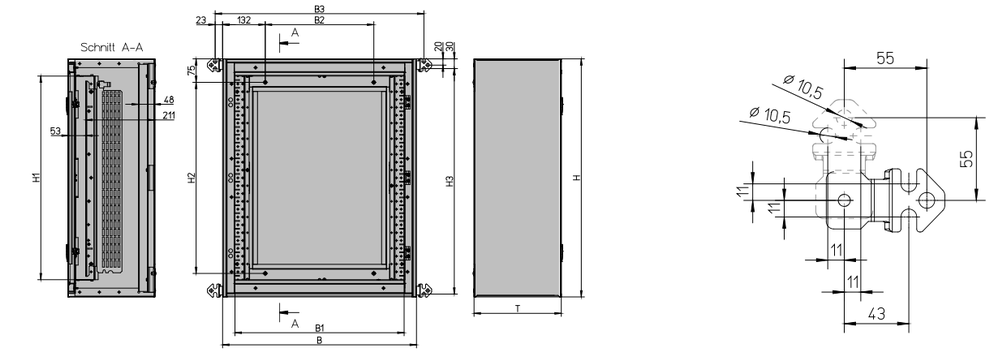

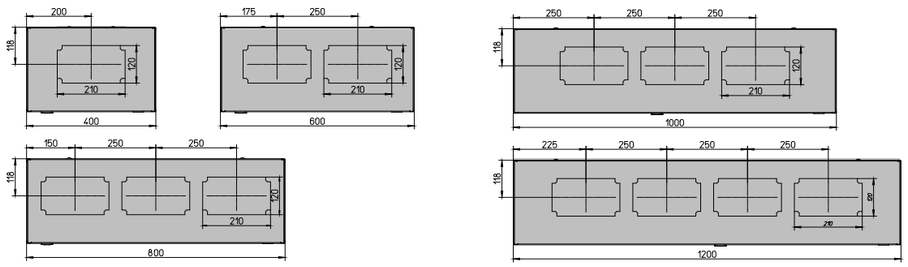

Type	Overall dimensions			Internal dimensions (front plate)		Wall mounting (Enclosure directly)		Wall mounting (via fixing bracket set)		Pv [W] (ΔT 20K)	Pv [W] (ΔT 35K)
	Width	Height	Depth	Width	Height	Width	Height				
	B	H	T	B1	H1	B2	H2	B3	H3	[W]	[W]
BPM-O-400/4	400	460	270	320	350	136	310	446	420	40	79
BPM-O-400/7	400	760	270	320	650	136	610	446	720	54	109
BPM-O-400/10	400	1060	270	320	950	136	910	446	1020	54	109
BPM-O-400/12	400	1260	270	320	1150	136	1110	446	1220	58	117
BPM-O-400/15	400	1560	270	320	1450	136	1410	446	1520	67	135
BPM-O-600/4	600	460	270	520	350	336	310	646	420	54	108
BPM-O-600/7	600	760	270	520	650	336	610	646	720	71	143
BPM-O-600/10	600	1060	270	520	950	336	910	646	1020	71	143
BPM-O-600/12	600	1260	270	520	1150	336	1110	646	1220	82	165
BPM-O-600/15	600	1560	270	520	1450	336	1410	646	1520	109	219
BPM-O-800/4	800	460	270	720	350	536	310	846	420	68	137
BPM-O-800/7	800	760	270	720	650	536	610	846	720	76	153
BPM-O-800/10	800	1060	270	720	950	536	910	846	1020	98	196
BPM-O-800/12	800	1260	270	720	1150	536	1110	846	1220	122	244
BPM-O-800/15	800	1560	270	720	1450	536	1410	846	1520	141	283
BPM-O-1000/10	1000	1060	270	920	950	736	910	1046	1020	135	272
BPM-O-1000/12	1000	1260	270	920	1150	736	1110	1046	1220	151	304
BPM-O-1000/15	1000	1560	270	920	1450	736	1410	1046	1520	187	375
BPM-O-1200/12	1200	1260	270	1120	1150	936	1110	1246	1220	191	383
BPM-O-1200/15	1200	1560	270	1120	1450	936	1410	1246	1520	215	431

Mounting of device rails onto rear frame (without mounting frame PSN-MSW)

- Front plates are mounted onto supports PSN-FPS (not in Delivered as of BPM-O board)
- Welded construction, side panels of the cover cannot be unmounted

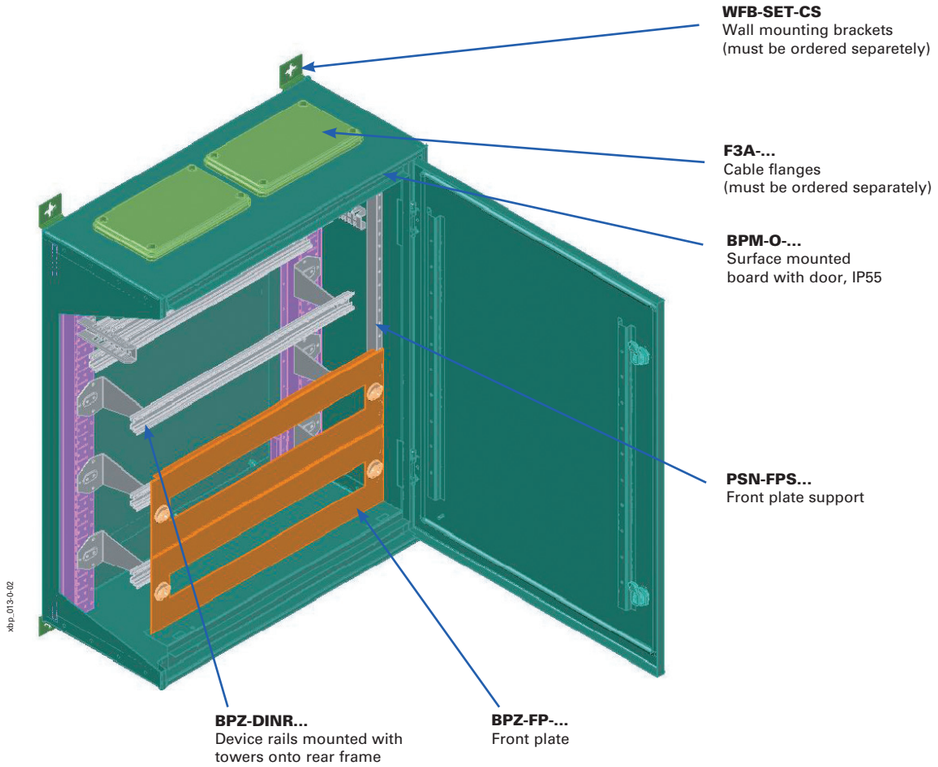

Mounting of device rails with mounting frame PSN-MSW

- Mounting onto corner towers BPZ-CTS-L (not in Delivered as of BPM-O board)
- The mounting process of side walls PSN-MSW is identical with version IP30
- Front plates are mounted directly onto PSN-MSW
- Welded construction, side panels of the cover cannot be unmounted

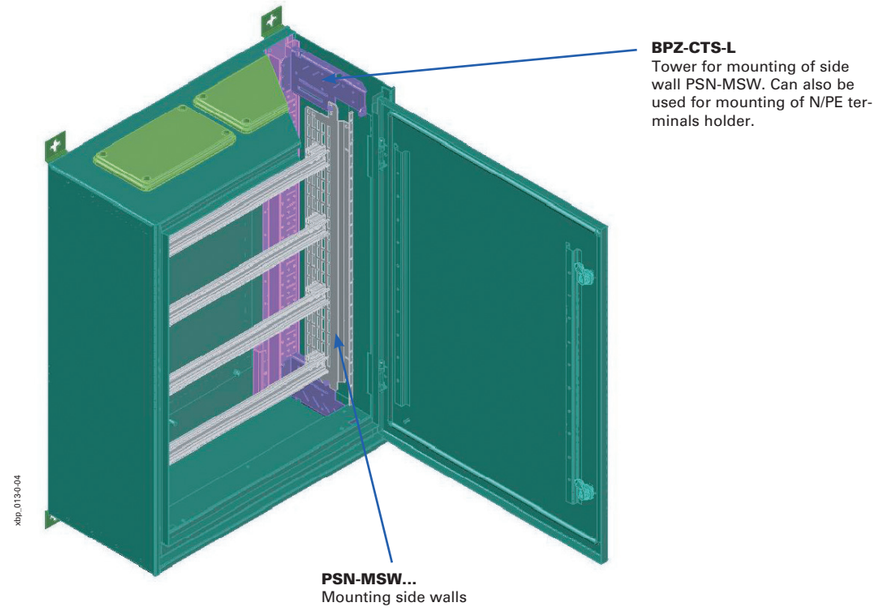

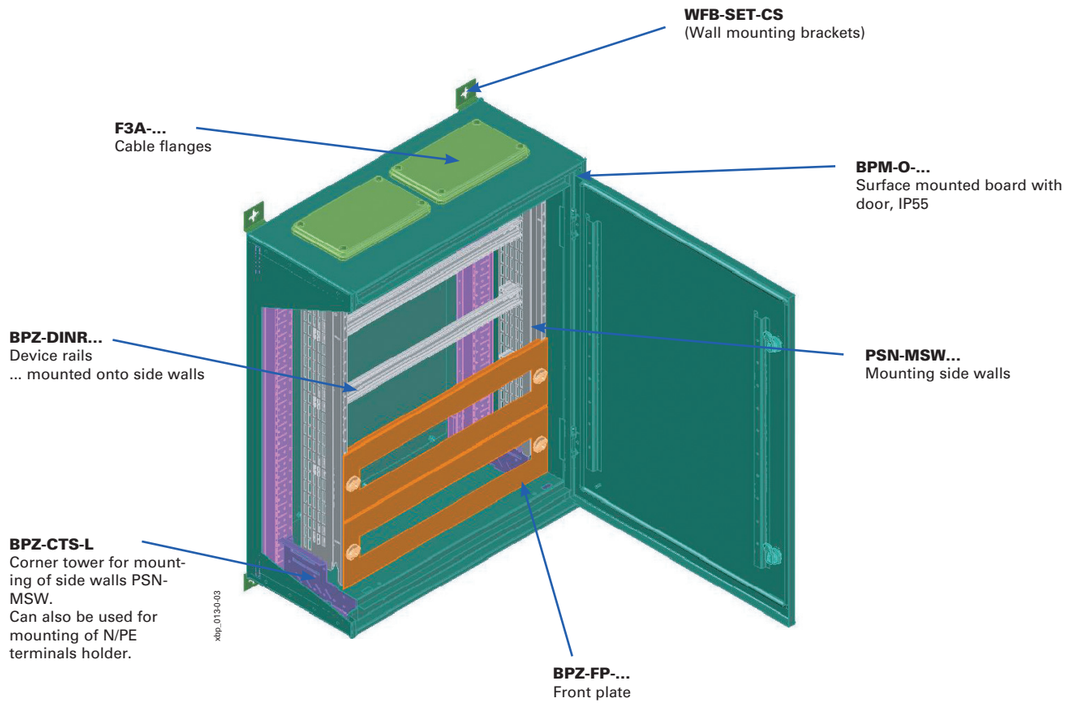

System Overview

BP(A/M)-U-3S-..., IP30/IP43/IP54

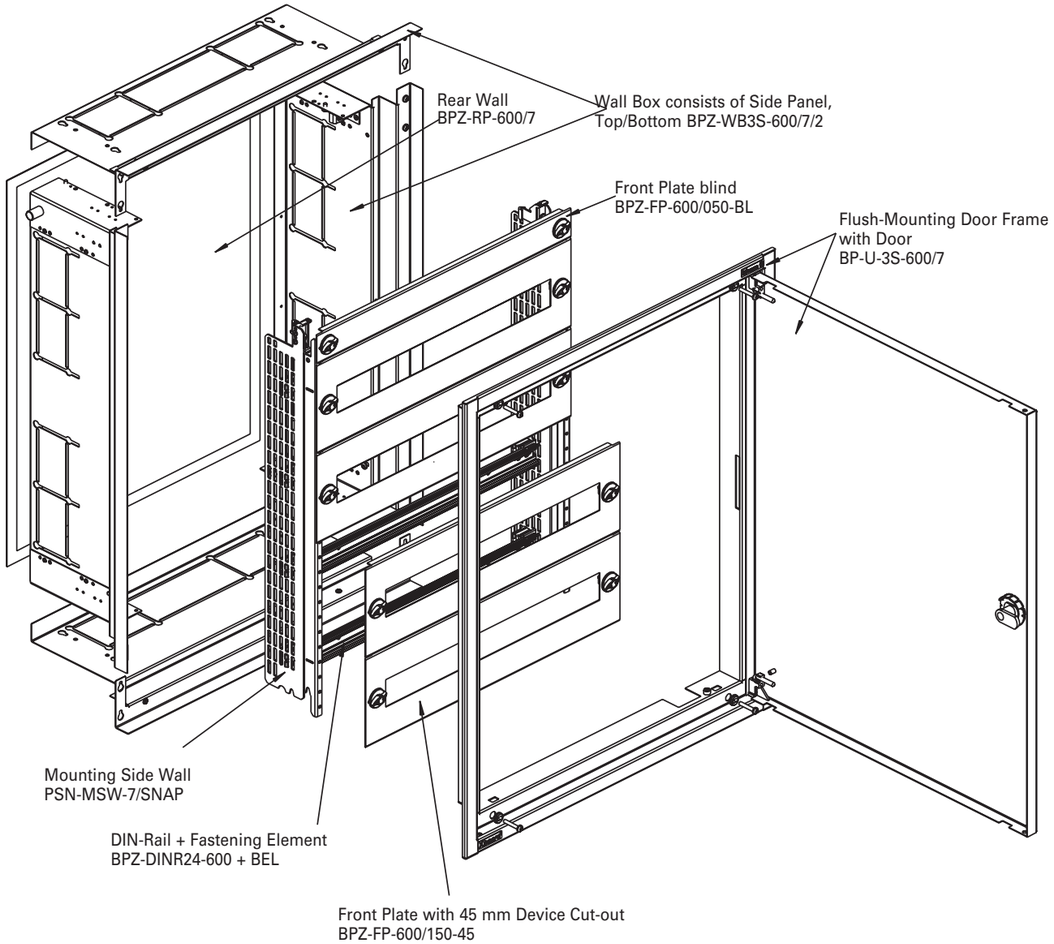

xEnergy Distribution Boards

Flush-mounted distribution board BP(A/M)-U-3S-..., IP30/IP43/IP54

xEnergy Basic
Sheet 1/4

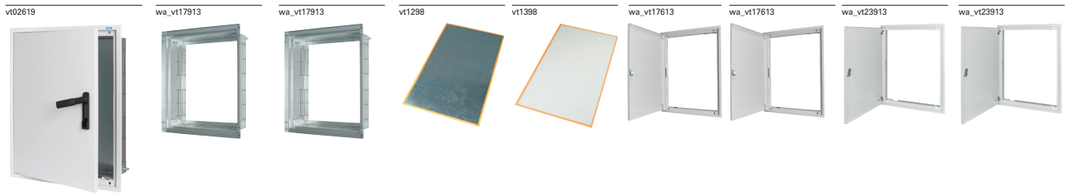

Width [mm]	Height [mm]	Height int. [mm]	Wall box for 3-step / System dedicated for MSW installation / Depth 1 (180 mm)	Depth 2 (240 mm)	Rear panel for 3-step / System galvanized / Sheet-steel	plastic	Flush-mounting door frame for 3-step design designed for indoor applications! / Degree of protection IP30			
			Galvanized sheet-steel				Door with rotary handle		Door with clip-down handle	
			Blank empty	Blank empty	blank	RAL 7035 grey	RAL 7035 grey	RAL 9016 white	RAL 7035 grey	RAL 9016 white
			Cat. No. per unit unit = 1 pc.	Cat. No. per unit unit = 1 pc.	Cat. No. per unit unit = 1 pc.	Cat. No. per unit unit = 1 pc.	Cat. No. per unit unit = 1 pc.	Cat. No. per unit unit = 1 pc.	Cat. No. per unit unit = 1 pc.	Cat. No. per unit unit = 1 pc.
BP(A/M)-U-3S... - project delivery form										
400 (13MU/ row)	460	350	**BPZ-WB3S-400/4/1** 111097	**BPZ-WB3S-400/4/2** 111123	**BPZ-RP-400/4** 111285	**BPZ-RPP-400/4** 111311	**BP-U-3S-400/4** 111149	**BP-U-3S-400/4-W** 111183	**BP-U-3S-400/4-P** 119093	**BP-U-3S-400/4-P-W** 119111
	760	650	**BPZ-WB3S-400/7/1** 111098	**BPZ-WB3S-400/7/2** 111124	**BPZ-RP-400/7** 111286	**BPZ-RPP-400/7** 111312	**BP-U-3S-400/7** 111150	**BP-U-3S-400/7-W** 111184	**BP-U-3S-400/7-P** 119094	**BP-U-3S-400/7-P-W** 119112
	1060	950	**BPZ-WB3S-400/10/1** 111099	**BPZ-WB3S-400/10/2** 111125	**BPZ-RP-400/10** 111287	**BPZ-RPP-400/10** 111313	**BP-U-3S-400/10** 111151	**BP-U-3S-400/10-W** 111185	**BP-U-3S-400/10-P** 119095	**BP-U-3S-400/10-P-W** 119113
	1260	1150	**BPZ-WB3S-400/12/1** 111100	**BPZ-WB3S-400/12/2** 111126	**BPZ-RP-400/12** 111288	**BPZ-RPP-400/12** 111314	**BP-U-3S-400/12** 111152	**BP-U-3S-400/12-W** 111186	**BP-U-3S-400/12-P** 119096	**BP-U-3S-400/12-P-W** 119114
600 (24MU/ row)	460	350	**BPZ-WB3S-600/4/1** 111101	**BPZ-WB3S-600/4/2** 111127	**BPZ-RP-600/4** 111289	**BPZ-RPP-600/4** 111315	**BP-U-3S-600/4** 111153	**BP-U-3S-600/4-W** 111187	**BP-U-3S-600/4-P** 119097	**BP-U-3S-600/4-P-W** 119115
	760	650	**BPZ-WB3S-600/7/1** 111102	**BPZ-WB3S-600/7/2** 111128	**BPZ-RP-600/7** 111290	**BPZ-RPP-600/7** 111316	**BP-U-3S-600/7** 111154	**BP-U-3S-600/7-W** 111188	**BP-U-3S-600/7-P** 119098	**BP-U-3S-600/7-P-W** 119116
	1060	950	**BPZ-WB3S-600/10/1** 111103	**BPZ-WB3S-600/10/2** 111129	**BPZ-RP-600/10** 111291	**BPZ-RPP-600/10** 111317	**BP-U-3S-600/10** 111155	**BP-U-3S-600/10-W** 111189	**BP-U-3S-600/10-P** 119099	**BP-U-3S-600/10-P-W** 119117
	1260	1150	**BPZ-WB3S-600/12/1** 111104	**BPZ-WB3S-600/12/2** 111130	**BPZ-RP-600/12** 111292	**BPZ-RPP-600/12** 111318	**BP-U-3S-600/12** 111156	**BP-U-3S-600/12-W** 111190	**BP-U-3S-600/12-P** 119100	**BP-U-3S-600/12-P-W** 119118
	1560	1450	**BPZ-WB3S-600/15/1** 111105	**BPZ-WB3S-600/15/2** 111131	**BPZ-RP-600/15** 111293	**BPZ-RPP-600/15** 111319	**BP-U-3S-600/15** 111157	**BP-U-3S-600/15-W** 111191	**BP-U-3S-600/15-P** 119101	**BP-U-3S-600/15-P-W** 119119
	1760	1650	**BPZ-WB3S-600/17/1** 111106	**BPZ-WB3S-600/17/2** 111132	**BPZ-RP-600/17** 111294	**BPZ-RPP-600/17** 111320	**BP-U-3S-600/17** 111158	**BP-U-3S-600/17-W** 111192	**BP-U-3S-600/17-P** 111160	**BP-U-3S-600/17-P-W** 111194
	2060	1950	**BPZ-WB3S-600/20/1** 111107	**BPZ-WB3S-600/20/2** 111133	**BPZ-RP-600/20** 111295	**BPZ-RPP-600/20** 111321	**BP-U-3S-600/20** 111159	**BP-U-3S-600/20-W** 111193	**BP-U-3S-600/20-P** 111161	**BP-U-3S-600/20-P-W** 111195
800 (35MU/ row)	760	650	**BPZ-WB3S-800/7/1** 111108	**BPZ-WB3S-800/7/2** 111134	**BPZ-RP-800/7** **111296**	**BPZ-RPP-800/7** 111322	**BP-U-3S-800/7** 111162	**BP-U-3S-800/7-W** 111196	**BP-U-3S-800/7-P** 119102	**BP-U-3S-800/7-P-W** 119120
	1060	950	**BPZ-WB3S-800/10/1** 111109	**BPZ-WB3S-800/10/2** 111135	**BPZ-RP-800/10** 111297	**BPZ-RPP-800/10** 111323	**BP-U-3S-800/10** 111163	**BP-U-3S-800/10-W** 111197	**BP-U-3S-800/10-P** 119103	**BP-U-3S-800/10-P-W** 119121
	1260	1150	**BPZ-WB3S-800/12/1** 111110	**BPZ-WB3S-800/12/2** 111136	**BPZ-RP-800/12** 111298	**BPZ-RPP-800/12** 111324	**BP-U-3S-800/12** 111164	**BP-U-3S-800/12-W** 111198	**BP-U-3S-800/12-P** 119104	**BP-U-3S-800/12-P-W** 119122
	1560	1450	**BPZ-WB3S-800/15/1** 111111	**BPZ-WB3S-800/15/2** 111137	**BPZ-RP-800/15** 111299	**BPZ-RPP-800/15** 111325	**BP-U-3S-800/15** 111165	**BP-U-3S-800/15-W** 111199	**BP-U-3S-800/15-P** 119105	**BP-U-3S-800/15-P-W** 119123
			BPZ-WB3S-800/17/1 111112	**BPZ-WB3S-800/17/2** 111138	**BPZ-RP-800/17** 111300	**BPZ-RPP-800/17** 111326	**BP-U-3S-800/17** 111166	**BP-U-3S-800/17-W** 111200	**BP-U-3S-800/17-P** 111168	**BP-U-3S-800/17-P-W** 111202
			BPZ-WB3S-800/20/1 111113	**BPZ-WB3S-800/20/2** 111139	**BPZ-RP-800/20** 111301	**BPZ-RPP-800/20** 111327	**BP-U-3S-800/20** 111167	**BP-U-3S-800/20-W** 111201	**BP-U-3S-800/20-P** 111169	**BP-U-3S-800/20-P-W** 111203

xEnergy Basic
Sheet 2/4

xEnergy Distribution Boards

Flush-mounted distribution board BP(A/M)-U-3S-..., IP30/IP43/IP54

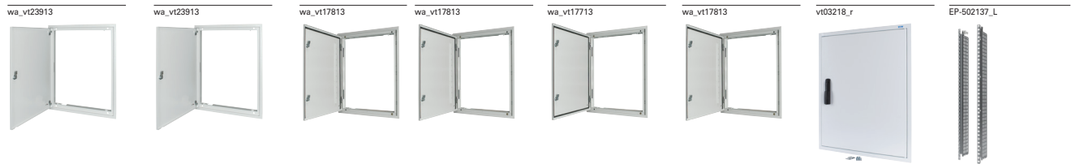

Flush-mounting door frame for 3-step design / Ddesigned for indoor applications! / Degree of protection IP30 / Fire-resistant (E60/EW60)		Flush-mounting door frame for 3-step design / Designed for outdoor applications! / Degree of protection IP43		Flush-mounting door frame for 3-step design / Designed for industrial applications / Degree of protection IP54			MSW installation / Mounting Side Wall (MSW) with standard depth
Door with BPZ-LOCK/ SH6METAL		Door with two-way key bit	Door with clip-down handle	Door with two-way key bit		Door with clip-down handle	Galvanized sheet-steel
RAL 7035 grey	RAL 9016 white	RAL 7035 grey	RAL 9016 white	RAL 7035 grey	RAL 9016 white	RAL 7035 grey	Blank empty
Cat. No. per unit unit = 1 pc.	Cat. No. per unit unit = 1 pc.	Cat. No. per unit unit = 1 pc.	Cat. No. per unit unit = 1 pc.	Cat. No. per unit unit = 1 pc.	Cat. No. per unit unit = 1 pc.	Cat. No. per unit unit = 1 pc.	Cat. No. per unit unit = 1 pc.
BP-U-3S-400/4-EW 116570	**BP-U-3S-400/4-EW-W** 116592	**BPA-U-3S-400/4** 111217	**BPA-U-3S-400/4-P** 119129	**BPM-U-3S-400/4** 111251	**BPM-U-3S-400/4-W** 144237	**BPM-U-3S-400/4-P** 119147	**PSN-MSW/4** EP-502135
BP-U-3S-400/7-EW 116571	**BP-U-3S-400/7-EW-W** 116593	**BPA-U-3S-400/7** 111218	**BPA-U-3S-400/7-P** 119130	**BPM-U-3S-400/7** 111252	**BPM-U-3S-400/7-W** 144238	**BPM-U-3S-400/7-P** 119148	**PSN-MSW/7** EP-502136
BP-U-3S-400/10-EW 116572	**BP-U-3S-400/10-EW-W** 116594	**BPA-U-3S-400/10** 111219	**BPA-U-3S-400/10-P** 119131	**BPM-U-3S-400/10** 111253	**BPM-U-3S-400/10-W** 144239	**BPM-U-3S-400/10-P** 119149	**PSN-MSW/10** EP-502137
BP-U-3S-400/12-EW 116573	**BP-U-3S-400/12-EW-W** 116595	**BPA-U-3S-400/12** 111220	**BPA-U-3S-400/12-P** 119132	**BPM-U-3S-400/12** 111254	**BPM-U-3S-400/12-W** 144240	**BPM-U-3S-400/12-P** 119150	**PSN-MSW/12** EP-502138
BP-U-3S-600/4-EW 116574	**BP-U-3S-600/4-EW-W** 116596	**BPA-U-3S-600/4** 111221	**BPA-U-3S-600/4-P** 119133	**BPM-U-3S-600/4** 111255	**BPM-U-3S-600/4-W** 144241	**BPM-U-3S-600/4-P** 119151	**PSN-MSW/4** EP-502135
BP-U-3S-600/7-EW 116575	**BP-U-3S-600/7-EW-W** 116597	**BPA-U-3S-600/7** 111222	**BPA-U-3S-600/7-P** 119134	**BPM-U-3S-600/7** 111256	**BPM-U-3S-600/7-W** 144242	**BPM-U-3S-600/7-P** 119152	**PSN-MSW/7** EP-502136
BP-U-3S-600/10-EW 116576	**BP-U-3S-600/10-EW-W** 116598	**BPA-U-3S-600/10** 111223	**BPA-U-3S-600/10-P** 119135	**BPM-U-3S-600/10** 111257	**BPM-U-3S-600/10-W** 144243	**BPM-U-3S-600/10-P** 119153	**PSN-MSW/10** EP-502137
BP-U-3S-600/12-EW 116577	**BP-U-3S-600/12-EW-W** 116599	**BPA-U-3S-600/12** 111224	**BPA-U-3S-600/12-P** 119136	**BPM-U-3S-600/12** 111258	**BPM-U-3S-600/12-W** 144244	**BPM-U-3S-600/12-P** 119154	**PSN-MSW/12** EP-502138
BP-U-3S-600/15-EW 116578	**BP-U-3S-600/15-EW-W** 116600	**BPA-U-3S-600/15** 111225	**BPA-U-3S-600/15-P** 119137	**BPM-U-3S-600/15** 111259	**BPM-U-3S-600/15-W** 144245	**BPM-U-3S-600/15-P** 119155	**PSN-MSW/15** EP-502139
BP-U-3S-600/17-EW 116579	**BP-U-3S-600/17-EW-W** 116601	**BPA-U-3S-600/17** 111226	**BPA-U-3S-600/17-P** 111228	**BPM-U-3S-600/17** 111260	**BPM-U-3S-600/17-W** 144246	**BPM-U-3S-600/17-P** 111262	**PSN-MSW/17** EP-502140
BP-U-3S-600/20-EW 116580	**BP-U-3S-600/20-EW-W** 116602	**BPA-U-3S-600/20** 111227	**BPA-U-3S-600/20-P** 111229	**BPM-U-3S-600/20** 111261	**BPM-U-3S-600/20-W** 144247	**BPM-U-3S-600/20-P** 111263	**PSN-MSW/20** EP-502141
BP-U-3S-800/7-EW 116581	**BP-U-3S-800/7-EW-W** 116603	**BPA-U-3S-800/7** 111230	**BPA-U-3S-800/7-P** 119138	**BPM-U-3S-800/7** 111264	**BPM-U-3S-800/7-W** 144248	**BPM-U-3S-800/7-P** 119156	**PSN-MSW/7** EP-502136
BP-U-3S-800/10-EW 116582	**BP-U-3S-800/10-EW-W** 116604	**BPA-U-3S-800/10** 111231	**BPA-U-3S-800/10-P** 119139	**BPM-U-3S-800/10** 111265	**BPM-U-3S-800/10-W** 144249	**BPM-U-3S-800/10-P** 119157	**PSN-MSW/10** EP-502137
BP-U-3S-800/12-EW 116583	**BP-U-3S-800/12-EW-W** 116605	**BPA-U-3S-800/12** 111232	**BPA-U-3S-800/12-P** 119140	**BPM-U-3S-800/12** 111266	**BPM-U-3S-800/12-W** 144250	**BPM-U-3S-800/12-P** 119158	**PSN-MSW/12** EP-502138
BP-U-3S-800/15-EW 116584	**BP-U-3S-800/15-EW-W** 116606	**BPA-U-3S-800/15** 111233	**BPA-U-3S-800/15-P** 119141	**BPM-U-3S-800/15** 111267	**BPM-U-3S-800/15-W** 144251	**BPM-U-3S-800/15-P** 119159	**PSN-MSW/15** EP-502139
BP-U-3S-800/17-EW 116585	**BP-U-3S-800/17-EW-W** 116607	**BPA-U-3S-800/17** 111234	**BPA-U-3S-800/17-P** 111236	**BPM-U-3S-800/17** 111268	**BPM-U-3S-800/17-W** 144252	**BPM-U-3S-800/17-P** 111270	**PSN-MSW/17** EP-502140
BP-U-3S-800/20-EW 116586	**BP-U-3S-800/20-EW-W** 116608	**BPA-U-3S-800/20** 111235	**BPA-U-3S-800/20-P** 111237	**BPM-U-3S-800/20** 111269	**BPM-U-3S-800/20-W** 144253	**BPM-U-3S-800/20-P** 111271	**PSN-MSW/20** EP-502141

xEnergy Distribution Boards

Flush-mounted distribution board BP(A/M)-U-3S-..., IP30/IP43/IP54

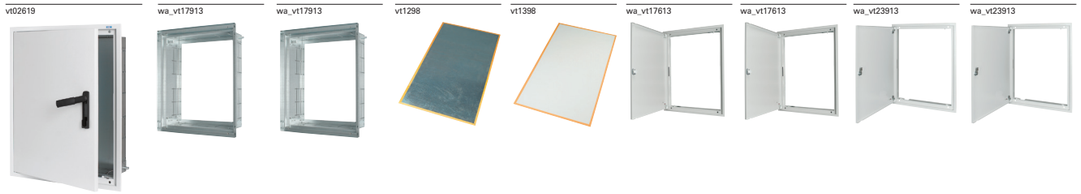

Width [mm]	Height [mm]	Height int. [mm]	Wall box for 3-step system dedicated for MSW installation depth 1 (180 mm)	Wall box for 3-step system dedicated for MSW installation depth 2 (240 mm)	Rear panel for 3-step system galvanized sheet-steel	Rear panel for 3-step system plastic	Flush-mounting door frame for 3-step design designed for indoor applications! degree of protection IP30			
			galvanized sheet-steel blank empty	galvanized sheet-steel blank empty	blank		door with swing handle RAL 7035 grey	door with swing handle RAL 9016 white	door with clip-down handle RAL 7035 grey	door with clip-down handle RAL 9016 white
			Cat. No. per unit unit = 1 pc.	Cat. No. per unit unit = 1 pc.	Cat. No. per unit unit = 1 pc.	Cat. No. per unit unit = 1 pc.	Cat. No. per unit unit = 1 pc.	Cat. No. per unit unit = 1 pc.	Cat. No. per unit unit = 1 pc.	Cat. No. per unit unit = 1 pc.
BP(A/M)-U-3S... - project delivery form										
1000 (46MU/ row)	1060	950	**BPZ-WB3S-1000/10/1** 111114	**BPZ-WB3S-1000/10/2** 111140	**BPZ-RP-1000/10** 111302	**BPZ-RPP-1000/10** 111328	**BP-U-3S-1000/10** 111170	**BP-U-3S-1000/10-W** 111204	**BP-U-3S-1000/10-P** 119106	**BP-U-3S-1000/10-P-W** 119124
	1260	1150	**BPZ-WB3S-1000/12/1** 111115	**BPZ-WB3S-1000/12/2** 111141	**BPZ-RP-1000/12** 111303	**BPZ-RPP-1000/12** 111329	**BP-U-3S-1000/12** 111171	**BP-U-3S-1000/12-W** 111205	**BP-U-3S-1000/12-P** 119107	**BP-U-3S-1000/12-P-W** 119125
	1560	1450	**BPZ-WB3S-1000/15/1** 111116	**BPZ-WB3S-1000/15/2** 111142	**BPZ-RP-1000/15** 111304	**BPZ-RPP-1000/15** 111330	**BP-U-3S-1000/15** 111172	**BP-U-3S-1000/15-W** 111206	**BP-U-3S-1000/15-P** 119108	**BP-U-3S-1000/15-P-W** 119126
	1760	1650	**BPZ-WB3S-1000/17/1** 111117	**BPZ-WB3S-1000/17/2** 111143	**BPZ-RP-1000/17** 111305	**BPZ-RPP-1000/17** 111331	**BP-U-3S-1000/17** 111173	**BP-U-3S-1000/17-W** 111207	**BP-U-3S-1000/17-P** 111175	**BP-U-3S-1000/17-P-W** 111209
	2060	1950	**BPZ-WB3S-1000/20/1** 111118	**BPZ-WB3S-1000/20/2** 111144	**BPZ-RP-1000/20** 111306	**BPZ-RPP-1000/20** 111332	**BP-U-3S-1000/20** 111174	**BP-U-3S-1000/20-W** 111208	**BP-U-3S-1000/20-P** 111176	**BP-U-3S-1000/20-P-W** 111210
1200 (57MU/ row)	1260	1150	**BPZ-WB3S-1200/12/1** 111119	**BPZ-WB3S-1200/12/2** 111145	**BPZ-RP-1200/12** 111307	**BPZ-RPP-1200/12** 111333	**BP-U-3S-1200/12** 111177	**BP-U-3S-1200/12-W** 111211	**BP-U-3S-1200/12-P** 119109	**BP-U-3S-1200/12-P-W** 119127
	1560	1450	**BPZ-WB3S-1200/15/1** 111120	**BPZ-WB3S-1200/15/2** 111146	**BPZ-RP-1200/15** 111308	**BPZ-RPP-1200/15** 111334	**BP-U-3S-1200/15** 111178	**BP-U-3S-1200/15-W** 111212	**BP-U-3S-1200/15-P** 119110	**BP-U-3S-1200/15-P-W** 119128
			BPZ-WB3S-1200/17/1 111121	**BPZ-WB3S-1200/17/2** 111147	**BPZ-RP-1200/17** 111309	**BPZ-RPP-1200/17** 111335	**BP-U-3S-1200/17** 111179	**BP-U-3S-1200/17-W** 111213	**BP-U-3S-1200/17-P** 111181	**BP-U-3S-1200/17-P-W** 111215
			BPZ-WB3S-1200/20/1 111122	**BPZ-WB3S-1200/20/2** 111148	**BPZ-RP-1200/20** 111310	**BPZ-RPP-1200/20** 111336	**BP-U-3S-1200/20** 111180	**BP-U-3S-1200/20-W** 111214	**BP-U-3S-1200/20-P** 111182	**BP-U-3S-1200/20-P-W** 111216

xEnergy Distribution Boards

Flush-mounted distribution board BP(A/M)-U-3S-..., IP30/IP43/IP54

Flush-mounting door frame for 3-step design designed for indoor applications! degree of protection IP30 fire-resistant (E60/EW60)		Flush-mounting door frame for 3-step design designed for outdoor applications! degree of protection IP43		Flush-mounting door frame for 3-step design designed for industrial applications degree of protection IP54			MSW installation Mounting side wall (MSW) with SNAP-element BPZ-SNAP
door with swing handle RAL 7035 grey	door with swing handle RAL 9016 white	door with two-way key bit RAL 7035 grey	door with clip-down handle RRAL 9016 white	door with two-way key bit RAL 7035 grey	door with two-way key bit RAL 9016 white	door with clip-down handle RAL 7035 grey	galvanized sheet-steel blank empty
Cat. No. per unit unit = 1 pc.	Cat. No. per unit unit = 1 pc.	Cat. No. per unit unit = 1 pc.	Cat. No. per unit unit = 1 pc.	Cat. No. per unit unit = 1 pc.	Cat. No. per unit unit = 1 pc.	Cat. No. per unit unit = 1 pc.	Cat. No. per unit unit = 1 pc.
BP-U-3S-1000/10-EW 116587	**BP-U-3S-1000/10-EW-W** 116609	**BPA-U-3S-1000/10** 111238	**BPA-U-3S-1000/10-P** 119142	**BPM-U-3S-1000/10** 111272	**BPM-U-3S-1000/10-W** 144254	**BPM-U-3S-1000/10-P** 119160	**PSN-MSW/10** EP-502137
BP-U-3S-1000/12-EW 116588	**BP-U-3S-1000/12-EW-W** 116610	**BPA-U-3S-1000/12** 111239	**BPA-U-3S-1000/12-P** 119143	**BPM-U-3S-1000/12** 111273	**BPM-U-3S-1000/12-W** 144255	**BPM-U-3S-1000/12-P** 119161	**PSN-MSW/12** EP-502138
BP-U-3S-1000/15-EW 116589	**BP-U-3S-1000/15-EW-W** 116611	**BPA-U-3S-1000/15** 111240	**BPA-U-3S-1000/15-P** 119144	**BPM-U-3S-1000/15** 111274	**BPM-U-3S-1000/15-W** 144256	**BPM-U-3S-1000/15-P** 119162	**PSN-MSW/15** EP-502139
BP-U-3S-1000/17-EW 116590	**BP-U-3S-1000/17-EW-W** 116612	**BPA-U-3S-1000/17** 111241	**BPA-U-3S-1000/17-P** 111243	**BPM-U-3S-1000/17** 111275	**BPM-U-3S-1000/17-W** 144257	**BPM-U-3S-1000/17-P** 111277	**PSN-MSW/17** EP-502140
BP-U-3S-1000/20-EW 116591	**BP-U-3S-1000/20-EW-W** 116613	**BPA-U-3S-1000/20** 111242	**BPA-U-3S-1000/20-P** 111244	**BPM-U-3S-1000/20** 111276	**BPM-U-3S-1000/20-W** 144258	**BPM-U-3S-1000/20-P** 111278	**PSN-MSW/20** EP-502141
-	-	**BPA-U-3S-1200/12** 111245	**BPA-U-3S-1200/12-P** 119145	**BPM-U-3S-1200/12** 111279	**BPM-U-3S-1200/12-W** 144259	**BPM-U-3S-1200/12-P** 119163	**PSN-MSW/12** EP-502138
-	-	**BPA-U-3S-1200/15** 111246	**BPA-U-3S-1200/15-P** 119146	**BPM-U-3S-1200/15** 111280	**BPM-U-3S-1200/15-W** 144260	**BPM-U-3S-1200/15-P** 119164	**PSN-MSW/15** EP-502139
-	-	**BPA-U-3S-1200/17** 111247	**BPA-U-3S-1200/17-P** 111249	**BPM-U-3S-1200/17** 111281	**BPM-U-3S-1200/17-W** 144261	**BPM-U-3S-1200/17-P** 111283	**PSN-MSW/17** EP-502140
-	-	**BPA-U-3S-1200/20** 111248	**BPA-U-3S-1200/20-P** 111250	**BPM-U-3S-1200/20** 111282	**BPM-U-3S-1200/20-W** 144262	**BPM-U-3S-1200/20-P** 111284	**PSN-MSW/20** EP-502141

Description

BP-U-3S..., IP30 / IP43 / IP54, enclosure depth 180/240 mm

- Delivery as „flatpack" for project delivery possible
- Degree of protection IP30 / IP43 / IP54
- Impact resistance IK08
- Protection class I (protective earth)
- Cable entry directly via the wall box (perforated on all sides)
- Quick and easy change of the hinge direction, door opening angle ~110°
- Wall box intended to be fixed directly in the stonework
- Max. built-in-depth either 180 mm or 240 mm depends on type
- Flush-mounted frame incl. door made of sheet steel powder-coated, RAL 7035 / RAL 9016
- Lateral add-on connection as well as top/bottom arrangement possible
- Variable interior installation with "Mounting side panel" (MSW)
- Surface adjustment up to 18 mm possible

Technical data

	BP-U-3S...
Electrical	
Type conforms to	IEC/EN 62208
Protection class	I (protective earth)
Degree of protection	IP30 (closed version with door/flansche) *) IP43 (special door frame BPA-U-3S... required) *) IP54 (special door frame BPM-U-3S... required) IP2XC (door open, user access level has to be closed properly with front covers)
Impact resistance	IK08
Rated operational voltage	415 VAC / 50 Hz
Rated current	Max. 630 A (door open, user access level has to be closed properly with front covers)
Earthing concept for the enclosure	
Main earthing	By means of self-tapping screw M5 in the wall box
Door earthing	By means of M6 welding bolts

The permissible temperature increases for switchgear assemblies with a rated current of up to 630 A can be evaluated in accordance with section 10.10.4.2 of IEC/EN 61439-1.

For the maximum permissible heat dissipation for all devices inside the distribution board at an ambient temperature of 35° C and ΔT of 20 K / 35 K at an enclosure height of 75 %, please refer to the table on enclosure dimensions; (calculation method acc.to IEC/TR 60890).

Mechanical	
Enclosure	Modular design by „flat-pack" construction possible (rear panel - wall box - mounting insert - flush-mounted frame - door)
Material	Flush-mounted frame and door (IP30): Sheet steel 1.25/1 mm, phosphated and polyester powder coated (structured) with corrosion protection IP43/IP54: sea-water resistant aluminum 1.5 mm, polyester powder coated (structured) Wall box and rear panel: sheet steel 1 mm, galvanized
Colour	Traffic white RAL 9016 , light grey RAL 7035
Door	Hinges on the inside, door opening angle ~110°; hinged either left or right, Width 1000 / 1200 mm in double-wing design, with encircling foamed sealing for IP43/IP54
Type	Flexible interior fitting with installation units ProfiSNAP on „mounting side panel" (MSW) Mounting side panel (MSW): removable mounting insert, external installation, fast and reliable
Locking mechanism	IP30: standard cam lock (plastic), optional metal lock with standard locking or two-way key bit IP43/IP54: standard locking with two-way key bit (metal) respectively swing handler (optional lock cylinder as accessory) Three-point locking mechanism from height 1060 mm (one-point respectively two-point at height 460 / 760 mm)
Cable entry	Easy-to-cut perforations in the wall box
Ambient condition	BP-U-3S: Indoor installation (flush-mounted installation) BPA-U-3S: Outdoor installation (flush-mounting) to a outer wall / facade BPM-U-3S: Indoor installation (industrial environment) Max. ambient temperature +40° C Min. ambient temperature -5° C (indoor) Min. ambient temperature -25° C (outdoor)
Halogen-free, RoHS	< 1%, yes
Accessories	Alternative lock options, add-on connection kit
Delivered as	Flat-pack components prepared for interior fitting „MSW"

Dimensions (mm)

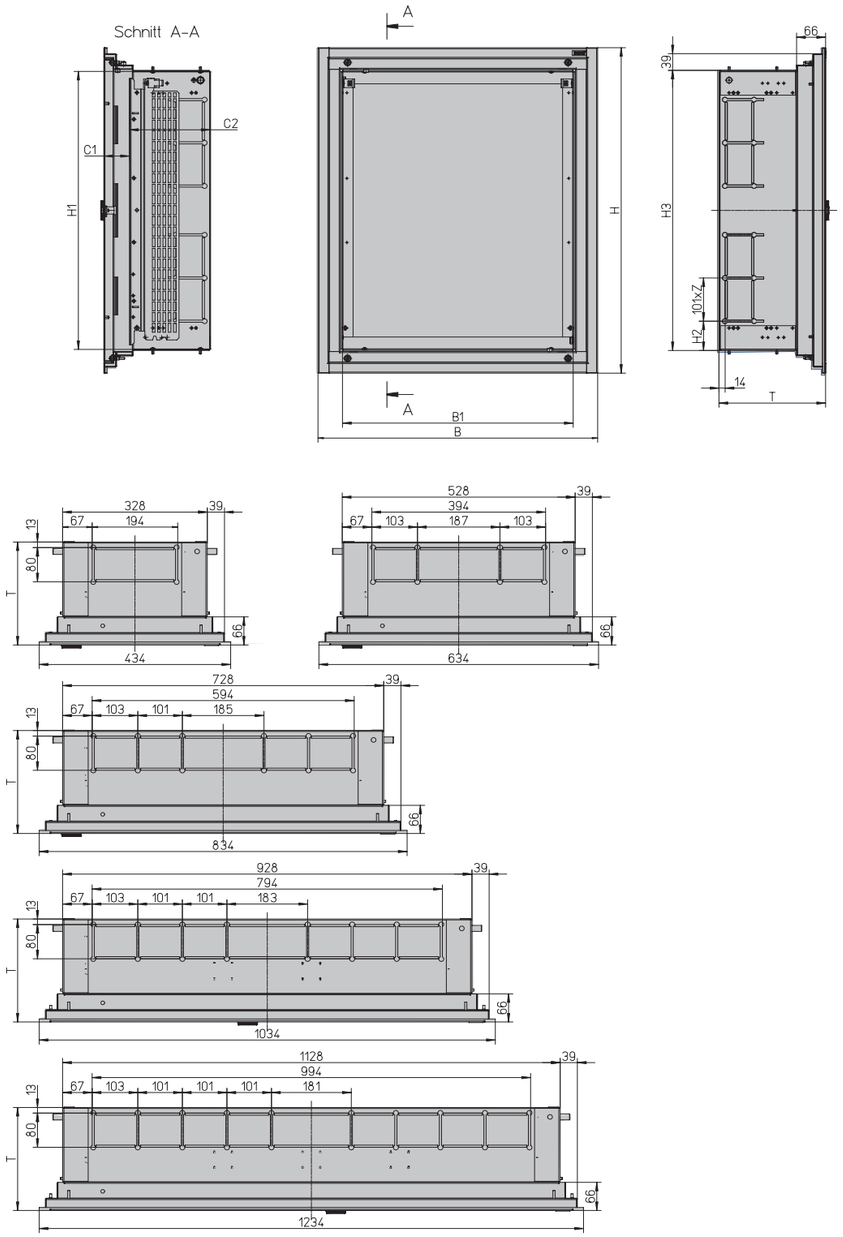

Dimensions (mm)

Type	Overall dimensions			Internal dimensions (front plate)							Pv [W] (ΔT 20K)	Pv [W] (ΔT 35K)
	Width B	Height H	Depth T	Width B1	Height H1	C1	H2	C2	H3	Z		
BP-U-3S-400/4/1	434	460	180	320	350	56	66	123	355	2	22	44
BP-U-3S-400/7/1	434	760	180	320	650	56	74	123	655	2	32	64
BP-U-3S-400/10/1	434	1060	180	320	950	56	74	123	955	2	42	84
BP-U-3S-400/12/1	434	1260	180	320	1150	56	74	123	1155	2	48	97
BP-U-3S-600/4/1	634	460	180	520	350	56	68	123	355	2	33	65
BP-U-3S-600/7/1	634	760	180	520	650	56	76	123	655	2	46	92
BP-U-3S-600/10/1	634	1060	180	520	950	56	74	123	955	2	59	118
BP-U-3S-600/12/1	634	1260	180	520	1150	56	74	123	1155	2	68	137
BP-U-3S-600/15/1	634	1560	180	520	1450	56	74	123	1455	2	56	112
BP-U-3S-600/17/1	634	1760	180	520	1650	56	74	123	1655	3	60	121
BP-U-3S-600/20/1	634	2060	180	520	1950	56	74	123	1955	3	68	137
BP-U-3S-800/7/1	834	760	180	720	650	56	74	123	655	2	61	122
BP-U-3S-800/10/1	834	1060	180	720	950	56	74	123	955	2	60	121
BP-U-3S-800/12/1	834	1260	180	720	1150	56	74	123	1155	2	67	133
BP-U-3S-800/15/1	834	1560	180	720	1450	56	74	123	1455	2	81	162
BP-U-3S-800/17/1	834	1760	180	720	1650	56	74	123	1655	3	95	190
BP-U-3S-800/20/1	834	2060	180	720	1950	56	74	123	1955	3	111	222
BP-U-3S-1000/10/1	1034	1060	180	920	950	56	74	123	955	2	76	152
BP-U-3S-1000/12/1	1034	1260	180	920	1150	56	74	123	1155	2	90	180
BP-U-3S-1000/15/1	1034	1560	180	920	1450	56	74	123	1455	2	118	236
BP-U-3S-1000/17/1	1034	1760	180	920	1650	56	74	123	1655	3	129	259
BP-U-3S-1000/20/1	1034	2060	180	920	1950	56	74	123	1955	3	153	306
BP-U-3S-1200/12/1	1234	1260	180	1120	1150	56	74	123	1155	2	124	250
BP-U-3S-1200/15/1	1234	1560	180	1120	1450	56	74	123	1455	2	148	297
BP-U-3S-1200/17/1	1234	1760	180	1120	1650	56	74	123	1655	3	170	340
BP-U-3S-1200/20/1	1234	2060	180	1120	1950	56	74	123	1955	3	189	379
BP-U-3S-400/4/2	434	460	240	320	350	56/92	66	183/147	355	2	24	49
BP-U-3S-400/7/2	434	760	240	320	650	56/92	74	183/147	655	2	35	71
BP-U-3S-400/10/2	434	1060	240	320	950	56/92	74	183/147	955	2	46	92
BP-U-3S-400/12/2	434	1260	240	320	1150	56/92	74	183/147	1155	2	53	106
BP-U-3S-600/4/2	634	460	240	520	350	56/92	68	183/147	355	2	36	71
BP-U-3S-600/7/2	634	760	240	520	650	56/92	76	183/147	655	2	49	99
BP-U-3S-600/10/2	634	1060	240	520	950	56/92	74	183/147	955	2	63	127
BP-U-3S-600/12/2	634	1260	240	520	1150	56/92	74	183/147	1155	2	56	113
BP-U-3S-600/15/2	634	1560	240	520	1450	56/92	74	183/147	1455	2	64	128
BP-U-3S-600/17/2	634	1760	240	520	1650	56/92	74	183/147	1655	3	70	140
BP-U-3S-600/20/2	634	2060	240	520	1950	56/92	74	183/147	1955	3	83	166
BP-U-3S-800/7/2	834	760	240	720	650	56/92	74	183/147	655	2	65	130
BP-U-3S-800/10/2	834	1060	240	720	950	56/92	74	183/147	955	2	67	134
BP-U-3S-800/12/2	834	1260	240	720	1150	56/92	74	183/147	1155	2	74	149
BP-U-3S-800/15/2	834	1560	240	720	1450	56/92	74	183/147	1455	2	93	187
BP-U-3S-800/17/2	834	1760	240	720	1650	56/92	74	183/147	1655	3	112	224
BP-U-3S-800/20/2	834	2060	240	720	1950	56/92	74	183/147	1955	3	125	251
BP-U-3S-1000/10/2	1034	1060	240	920	950	56/92	74	183/147	955	2	86	173
BP-U-3S-1000/12/2	1034	1260	240	920	1150	56/92	74	183/147	1155	2	103	206
BP-U-3S-1000/15/2	1034	1560	240	920	1450	56/92	74	183/147	1455	2	131	262
BP-U-3S-1000/17/2	1034	1760	240	920	1650	56/92	74	183/147	1655	3	145	290
BP-U-3S-1000/20/2	1034	2060	240	920	1950	56/92	74	183/147	1955	3	175	350
BP-U-3S-1200/12/2	1234	1260	240	1120	1150	56/92	74	183/147	1155	2	139	278
BP-U-3S-1200/15/2	1234	1560	240	1120	1450	56/92	74	183/147	1455	2	165	331
BP-U-3S-1200/17/2	1234	1760	240	1120	1650	56/92	74	183/147	1655	3	192	385
BP-U-3S-1200/20/2	1234	2060	240	1120	1950	56/92	74	183/147	1955	3	204	410

Side panels of wall box BPZ-WB3S

Depth 180, 240

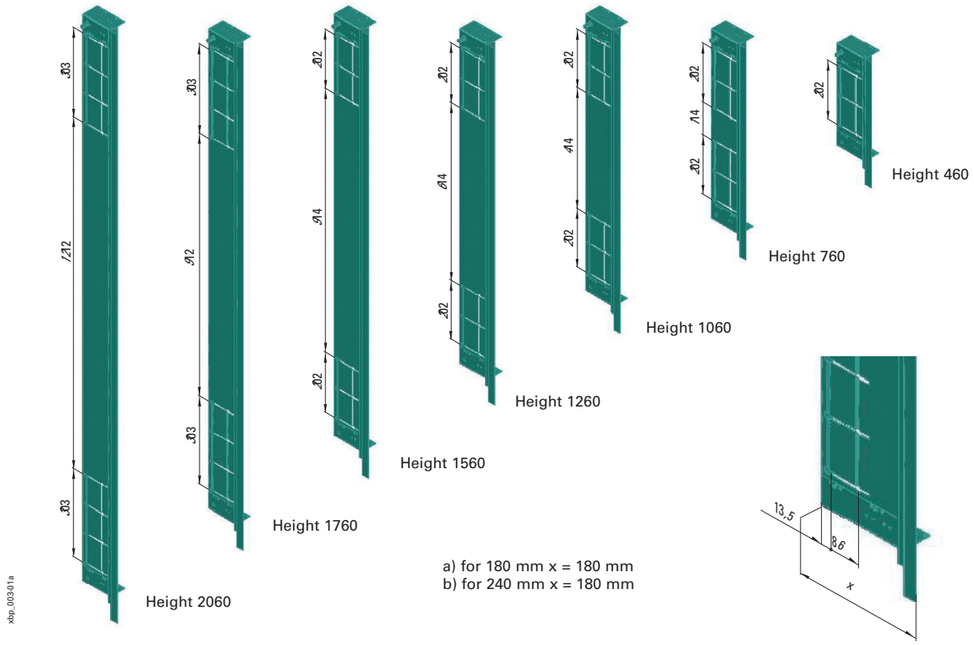

Top and bottom panel of wall box BPZ-WB3S

Depth 180, 240

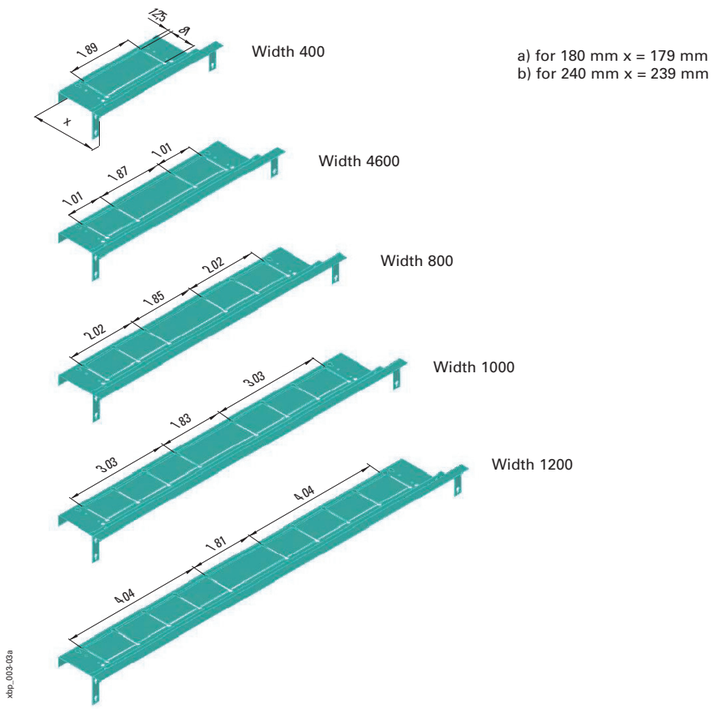

Connecting of flush-mounting boards with BPZ-BR/WB3S

- Use of coupling flange BPZ-BR/WB3S
- The coupling flanges define respective space in between particular wall boxes
- Possible to connect boards in parallel, one above the other or into a cross (i.e. parallel and one above the other at the same time)

Mounting process:

1. Placing of wall boxes BPZ-WB3S in prallel / one above the other
2. Put of flange BPZ-BR/WB3S. The big opening has to be oriented toward the rear
3. Fixing of the flange by means of screws

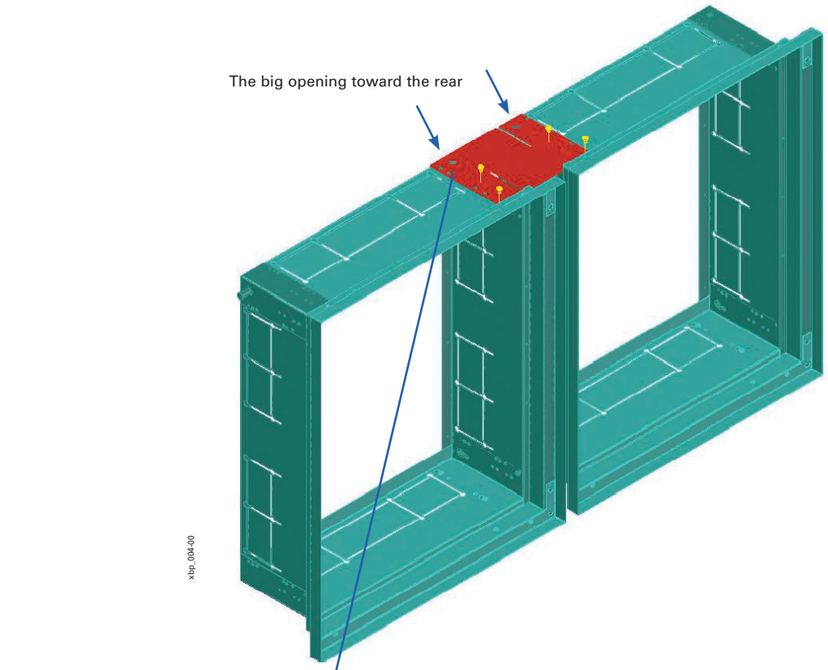

Connection of boards in parallel / above the other

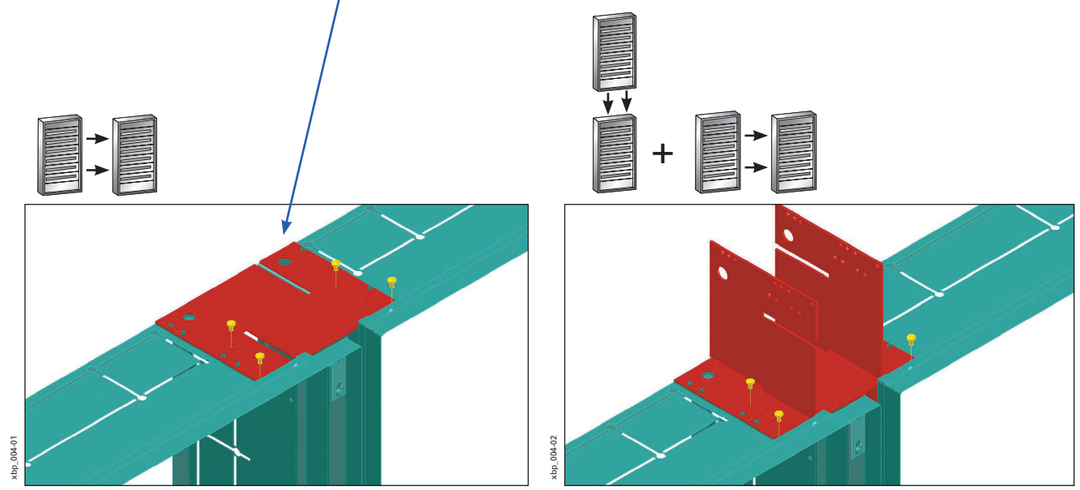

Cross connection of 4 boards (2 x 2)

Mounting of side walls PSN-MSW into wall box BPZ-WB3S

Mounting process:

1. Placing of the side wall PSN-MSW on bottom hitch
2. Tipping of the side wall to correct position. This position is indicated with click of the pawl BPZ-SNAP.
3. Tightening of the top hitch screw
4. Tightening of the bottom hitch screw

Notes:

- Usually, a complete frame (2 side walls, device rails, devices) is mounted
- For flush-mounting boards, the sidewalls PSN-MSW have to be equipped with pawls BPZ-SNAP. These pawls do not substitute a function of the original screw. The frame has to be fixed with this screw!
- To demount the frame PSN-MSW, a flat screwdriver is necessary to press away a pin of pawl BPZ-SNAP.

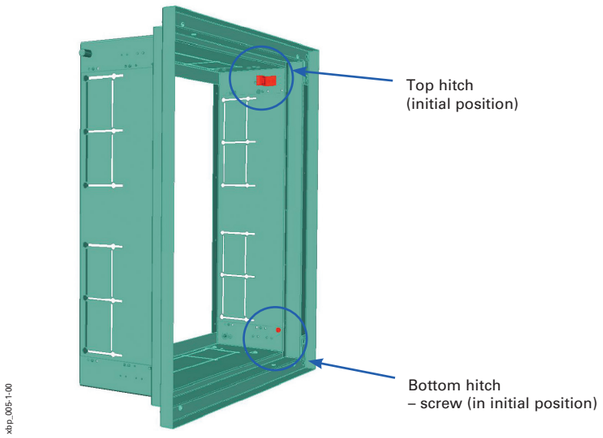

Mounting process for pawl BPZ-SNAP:

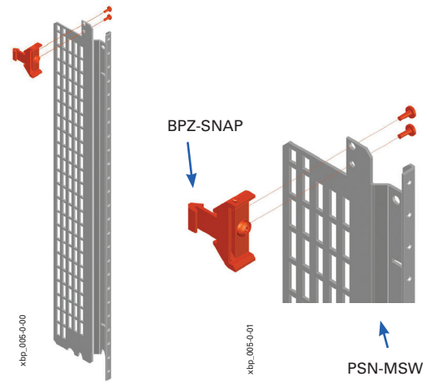

Detail of bottom hitch
*) possibility of change of side wall depth

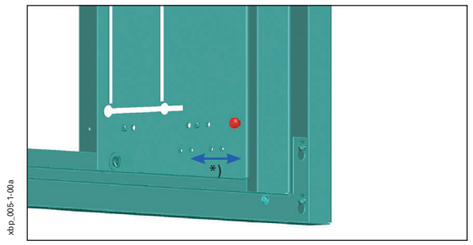

Detail of top hitch

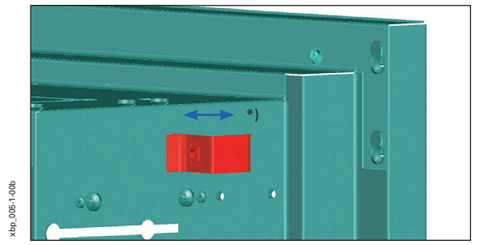

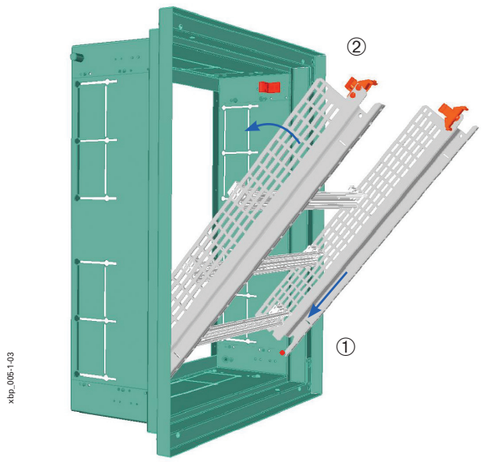

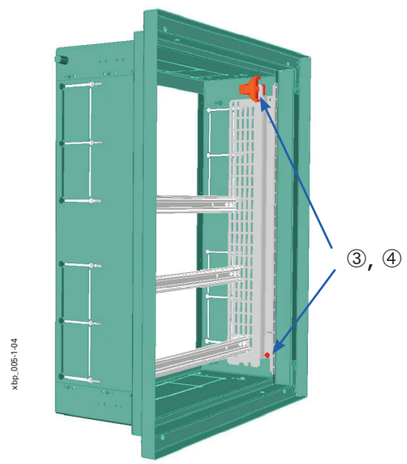

Rear walls, BPZ-RP

- Rear wall for wall box BPZ-WB3S
- Material: sheet steel, zinc-coated, thickness 1 mm, plastic
- Mounting by means of self-sealing tape
- Delivered as: 1 rear panel
- Attention: sheet steel rear wall must be connected through screws into the earthing concept!

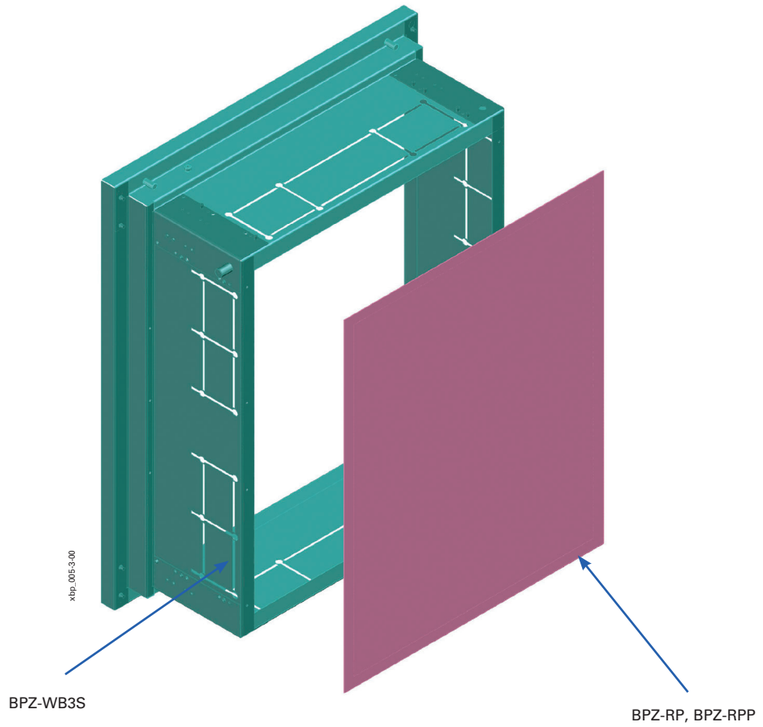

3-Step Flush-Mounting Door Frame, with Door, BP.-U-3S-...

- IP30 . . . BP-U-3S
- IP43 . . . BPA-U-3S, with foamed sealing and rain bar for outdoor application
- IP54 . . . BPM-U-3S, with foamed sealing for moisture-proof application
- Material: Sheet steel, powder-coated, RAL 7035 or RAL 9016
  Aluminium, powder-coated, RAL 7035
- Delivered as: Frame, door with hinges
- Attention: Inserting the Flush-Mounting Door Frame BPA-U-3S (IP43) or BPM-U-3S (IP54) in the Wall Box BPZ-WB3S, the facility builder has to ensure waterproofing against the wall covering substrate.

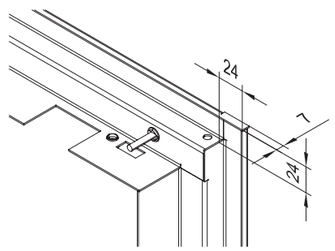

Separation Frame Set, BPZ-USF

- Only for flush-mounting boards with a width of 1000 and 1200 mm
- Only with MSW application
- For segarate a 1000 or 1200 mm board in a 600/400 or 600/600 section
- Material: Sheet steel, powder-coated grey (RAL 7035) and white (RAL 9016)
- Delivered as: 1 Segaration Frame and fixing material

System Overview

BP-F-..., IP30 (IP31), enclosure depth 250 / 300 / 400 mm

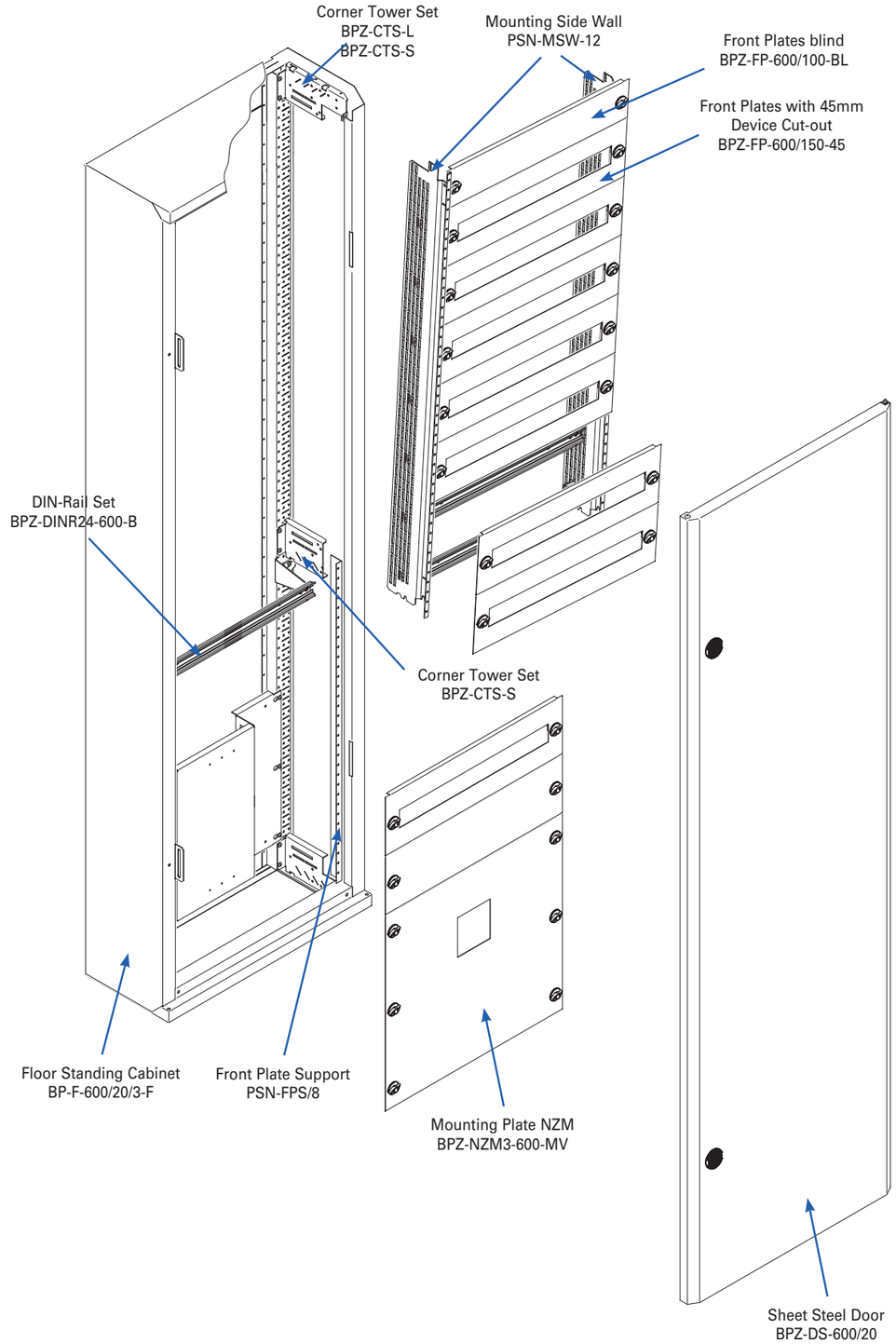

xEnergy Distribution Boards

Floor-standing distribution board BP-F-..., IP30

wa_vt03613 | wa_vt03513 | wa_vt03613 | wa_vt03613 | wa_vt03513 | wa_vt03613

Width [mm]	Height [mm]	Height int. [mm]	Pre-assembled configuration individual installation / Incl. 2K-flanges on top/bottom / Door with swing handle / Standard depth of 300 mm		Pre-assembled configuration individual installation / incl. 2K-flanges on top/bottom / Door with clip-down handle BPZ-SH-L Standard depth of 300 mm		Pre-assembled configuration individual installation / Prepared for F3A-flanges on top/bottom / Door with clip-down handle BPZ-SH-L / Standard depth of 300 mm	Pre-assembled configuration for individual installation, incl. 2K-flanges on top/bottom Door with swing handle / Door with clip-down handle / Reduced depth of 250 mm Extended depth of 400 mm	
			RAL 7035 grey Empty	RAL 9016 white	RAL 7035 grey Empty	RAL 9016 white	RAL 7035 grey Empty	RAL 7035 grey Empty	
			Cat. No. per unit unit = 1 pc.	Cat. No. per unit unit = 1 pc.	Cat. No. per unit unit = 1 pc.	Cat. No. per unit unit = 1 pc.	Cat. No. per unit unit = 1 pc.	Cat. No. per unit unit = 1 pc.	Cat. No. per unit unit = 1 pc.
BP-F-..., IP30 - fully assembled									
400 (13MU/ row)	1760	1650	**BP-F-400/17/3** 102055	**BP-F-400/17/3-W** 102335	**BP-F-400/17/3-P** 102355	**BP-F-400/17/3-P-W** 102375	**BP-F-400/17/3-P-F3A** 187840	-	-
	2060	1950	**BP-F-400/20/3** 102056	**BP-F-400/20/3-W** 102336	**BP-F-400/20/3-P** 102356	**BP-F-400/20/3-P-W** 102376	**BP-F-400/20/3-P-F3A** 187841	**BP-F-400/20/2.5 *)** 119187	**BP-F-400/20/4-P** 119192
600 (24MU/ row)	1760	1650	**BP-F-600/17/3** 102057	**BP-F-600/17/3-W** 102337	**BP-F-600/17/3-P** 102357	**BP-F-600/17/3-P-W** 102377	**BP-F-600/17/3-P-F3A** 187842	-	-
	2060	1950	**BP-F-600/20/3** 102058	**BP-F-600/20/3-W** 102338	**BP-F-600/20/3-P** 102358	**BP-F-600/20/3-P-W** 102378	**BP-F-600/20/3-P-F3A** 187843	**BP-F-600/20/2.5 *)** 119188	**BP-F-600/20/4-P** 119193
800 (35MU/ row)	1760	1650	**BP-F-800/17/3** 102059	**BP-F-800/17/3-W** 102339	**BP-F-800/17/3-P** 102359	**BP-F-800/17/3-P-W** 102379	**BP-F-800/17/3-P-F3A** 187844	-	-
	2060	1950	**BP-F-800/20/3** 102320	**BP-F-800/20/3-W** 102340	**BP-F-800/20/3-P** 102360	**BP-F-800/20/3-P-W** 102380	**BP-F-800/20/3-P-F3A** 187845	**BP-F-800/20/2.5 *)** 119189	**BP-F-800/20/4-P** 119194
1000 (46MU/ row)	1760	1650	**BP-F-1000/17/3** 102321	**BP-F-1000/17/3-W** 102341	**BP-F-1000/17/3-P** 102361	**BP-F-1000/17/3-P-W** 102381	**BP-F-1000/17/3-P-F3A** 187846	-	-
	2060	1950	**BP-F-1000/20/3** 102322	**BP-F-1000/20/3-W** 102342	**BP-F-1000/20/3-P** 102362	**BP-F-1000/20/3-P-W** 102382	**BP-F-1000/20/3-P-F3A** 187847	**BP-F-1000/20/2.5 *)** 119190	**BP-F-1000/20/4-P** 119195
1200 (57MU/ row)	1760	1650	**BP-F-1200/17/3** 102323	**BP-F-1200/17/3-W** 102343	**BP-F-1200/17/3-P** 102363	**BP-F-1200/17/3-P-W** 102383	**BP-F-1200/17/3-P-F3A** 187848	-	-
	2060	1950	**BP-F-1200/20/3** 102324	**BP-F-1200/20/3-W** 102344	**BP-F-1200/20/3-P** 102364	**BP-F-1200/20/3-P-W** 102384	**BP-F-1200/20/3-P-F3A** 187849	**BP-F-1200/20/2.5 *)** 119191	**BP-F-1200/20/4-P** 119196

*) with a depth of 250mm only MSW mounting possible!

xEnergy Distribution Boards

Floor-standing distribution board BP-F-..., IP30

vt06905, wa_vt51413 | wa_vt23313, wa_vt23413 | EP-502148_L | EP-502141_L | EP-502581_L

Plinth 100 mm / Side parts 1 pair / Front cover / Standard depth of 300 mm		Cable arrangement / Plinth 100 mm / Cable strain-relief rail / Standard depth of 300 mm		Installation back frame / Frontplate support	MSW installation / Mounting Side Wall (MSW) with standard depth	MSW installation / Mounting Side Wall (MSW) with extended depth
RAL 7035 grey	RAL 9016 white	RAL 7035 grey	RAL 9016 white			
Cat. No. per unit unit = 1 pc.	Cat. No. per unit unit = 1 pc.	Cat. No. per unit unit = 1 pc.	Cat. No. per unit unit = 1 pc.	Cat. No. per unit unit = 1 pc.	Cat. No. per unit unit = 1 pc.	Cat. No. per unit unit = 1 pc.
BPZ-SS-1/3 293513 **BPZ-FS-400/1** 293493	**BPZ-SS-1/3-W** 293514 **BPZ-FS-400/1-W** 293494	**BPZ-KR41/300** 116269 **BPZ-KFS-400** 116293	**BPZ-KR41/300-W** 116277 **BPZ-KFS-400** 116293	**PSN-FPS/17** EP-502147 **PSN-FPS/20** EP-502148	**PSN-MSW/17** EP-502140 **PSN-MSW/20** EP-502141	**PSN-MSW/17-EXT** EP-502580 **PSN-MSW/20-EXT** EP-502581
BPZ-SS-1/3 293513 **BPZ-FS-600/1** 293497	**BPZ-SS-1/3-W** 293514 **BPZ-FS-600/1-W** 293498	**BPZ-KR61/300** 116271 **BPZ-KFS-600** 116294	**BPZ-KR61/300-W** 116279 **BPZ-KFS-600** 116294	**PSN-FPS/17** EP-502147 **PSN-FPS/20** EP-502148	**PSN-MSW/17** EP-502140 **PSN-MSW/20** EP-502141	**PSN-MSW/17-EXT** EP-502580 **PSN-MSW/20-EXT** EP-502581
BPZ-SS-1/3 293513 **BPZ-FS-800/1** 293501	**BPZ-SS-1/3-W** 293514 **BPZ-FS-800/1-W** 293502	**BPZ-KR81/300** 187882 **BPZ-KFS-800** 187892	**BPZ-KR81/300-W** 187886 **BPZ-KFS-800** 187892	**PSN-FPS/17** EP-502147 **PSN-FPS/20** EP-502148	**PSN-MSW/17** EP-502140 **PSN-MSW/20** EP-502141	**PSN-MSW/17-EXT** EP-502580 **PSN-MSW/20-EXT** EP-502581
BPZ-SS-1/3 293513 **BPZ-FS-1000/1** 293505	**BPZ-SS-1/3-W** 293514 **BPZ-FS-1000/1-W** 293506	**BPZ-KR101/300** 187884 **BPZ-KFS-1000** 187893	**BPZ-KR101/300-W** 187888 **BPZ-KFS-1000** 187893	**PSN-FPS/17** EP-502147 **PSN-FPS/20** EP-502148	**PSN-MSW/17** EP-502140 **PSN-MSW/20** EP-502141	**PSN-MSW/17-EXT** EP-502580 **PSN-MSW/20-EXT** EP-502581
BPZ-SS-1/3 293513 **BPZ-FS-1200/1** 293509	**BPZ-SS-1/3-W** 293514 **BPZ-FS-1200/1-W** 293510	**BPZ-KR121/300** 116275 **BPZ-KFS-1200** 116296	**BPZ-KR121/300-W** 116283 **BPZ-KFS-1200** 116296	**PSN-FPS/17** EP-502147 **PSN-FPS/20** EP-502148	**PSN-MSW/17** EP-502140 **PSN-MSW/20** EP-502141	**PSN-MSW/17-EXT** EP-502580 **PSN-MSW/20-EXT** EP-502581

wa_vt03713 wa_vt03713 wa_vt03713 wa_vt51313 wa_vt51313

Width [mm]	Height [mm]	Height int. [mm]	Pre-assembled configuration individual installation / Without flange plate / Without door / Standard depth of 300 mm		Pre-assembled configuration prepared for MSW installation / Without flange plate / Without door / Reduced depth of 250 mm	Extended depth of 400 mm	Sheet metal door / Swing handle	
			RAL 7035 grey Empty	RAL 9016 white	RAL 7035 grey Empty		RAL 7035 grey	RAL 9016 white
			Cat. No. per unit unit = 1 pc.	Cat. No. per unit unit = 1 pc.	Cat. No. per unit unit = 1 pc.	Cat. No. per unit unit = 1 pc.	Cat. No. per unit unit = 1 pc.	Cat. No. per unit unit = 1 pc.
BP-F-..., IP30 - fully assembled								
400 (13MU/ row)	1760	1650	**BP-F-400/17/3-F** 102395	**BP-F-400/17/3-F-W** 102407	-	-	**BPZ-DS-400/17** 102419	**BPZ-DS-400/17-W** 102443
	2060	1950	**BP-F-400/20/3-F** 102396	**BP-F-400/20/3-F-W** 102408	**BP-F-400/20/2.5-F** 120754	**BP-F-400/20/4-F** 120759	**BPZ-DS-400/20** 102420	**BPZ-DS-400/20-W** 102444
600 (24MU/ row)	1760	1650	**BP-F-600/17/3-F** 102397	**BP-F-600/17/3-F-W** 102409	-	-	**BPZ-DS-600/17** 102421	**BPZ-DS-600/17-W** 102445
	2060	1950	**BP-F-600/20/3-F** 102398	**BP-F-600/20/3-F-W** 102410	**BP-F-600/20/2.5-F** 120755	**BP-F-600/20/4-F** 120760	**BPZ-DS-600/20** 102422	**BPZ-DS-600/20-W** 102446
800 (35MU/ row)	1760	1650	**BP-F-800/17/3-F** 102399	**BP-F-800/17/3-F-W** 102411	-	-	**BPZ-DS-800/17** 102423	**BPZ-DS-800/17-W** 102447
	2060	1950	**BP-F-800/20/3-F** 102400	**BP-F-800/20/3-F-W** 102412	**BP-F-800/20/2.5-F** 120756	**BP-F-800/20/4-F** 120761	**BPZ-DS-800/20** 102424	**BPZ-DS-800/20-W** 102448
1000 (46MU/ row)	1760	1650	**BP-F-1000/17/3-F** 120691	**BP-F-1000/17/3-F-W** 120695	-	-	**BPZ-DS-400/17-L + BPZ-DS-600/17** 106374 + 102421	**BPZ-DS-400/17-L-W + BPZ-DS-600/17-W** 106378 + 102445
	2060	1950	**BP-F-1000/20/3-F** 120692	**BP-F-1000/20/3-F-W** 120696	**BP-F-1000/20/2.5-F** 120757	**BP-F-1000/20/4-F** 120762	**BPZ-DS-400/20-L + BPZ-DS-600/20** 106375 + 102422	**BPZ-DS-400/20-L-W + BPZ-DS-600/20-W** 106379 + 102446
1200 (57MU/ row)	1760	1650	**BP-F-1200/17/3-F** 120693	**BP-F-1200/17/3-F-W** 120697	-	-	**BPZ-DS-600/17-L + BPZ-DS-600/17** 106376 + 102421	**BPZ-DS-600/17-L-W + BPZ-DS-600/17-W** 106420 + 102445
	2060	1950	**BP-F-1200/20/3-F** 120694	**BP-F-1200/20/3-F-W** 120698	**BP-F-1200/20/2.5-F** 120758	**BP-F-1200/20/4-F** 120763	**BPZ-DS-600/20-L + BPZ-DS-600/20** 106377 + 102422	**BPZ-DS-600/20-L-W + BPZ-DS-600/20-W** 106421 + 102446

vt00106 wa_vt03913 vt00206

Sheet metal door (transparent) Swing handle		Sheet metal door Clip-down handle		Sheet metal door (transparent) Clip-down handle	
RAL 7035 grey	RAL 9016 white	RAL 7035 grey	RAL 9016 white	RAL 7035 grey	RAL 9016 white
Cat. No. per unit unit = 1 pc.	Cat. No. per unit unit = 1 pc.	Cat. No. per unit unit = 1 pc.	Cat. No. per unit unit = 1 pc.	Cat. No. per unit unit = 1 pc.	Cat. No. per unit unit = 1 pc.
BPZ-DT-400/17 102431	**BPZ-DT-400/17-W** 102455	**BPZ-DS-400/17-P** 102425	**BPZ-DS-400/17-P-W** 102449	**BPZ-DT-400/17-P** 102437	**BPZ-DT-400/17-P-W** 102461
BPZ-DT-400/20 102432	**BPZ-DT-400/20-W** 102456	**BPZ-DS-400/20-P** 102426	**BPZ-DS-400/20-P-W** 102450	**BPZ-DT-400/20-P** 102438	**BPZ-DT-400/20-P-W** 102462
BPZ-DT-600/17 102433	**BPZ-DT-600/17-W** 102457	**BPZ-DS-600/17-P** 102427	**BPZ-DS-600/17-P-W** 102451	**BPZ-DT-600/17-P** 102439	**BPZ-DT-600/17-P-W** 102463
BPZ-DT-600/20 102434	**BPZ-DT-600/20-W** 102458	**BPZ-DS-600/20-P** 102428	**BPZ-DS-600/20-P-W** 102452	**BPZ-DT-600/20-P** 102440	**BPZ-DT-600/20-P-W** 102464
BPZ-DT-800/17 102435	**BPZ-DT-800/17-W** 102459	**BPZ-DS-800/17-P** 102429	**BPZ-DS-800/17-P-W** 102453	**BPZ-DT-800/17-P** 102441	**BPZ-DT-800/17-P-W** 102465
BPZ-DT-800/20 102436	**BPZ-DT-800/20-W** 102460	**BPZ-DS-800/20-P** 102430	**BPZ-DS-800/20-P-W** 102454	**BPZ-DT-800/20-P** 102442	**BPZ-DT-800/20-P-W** 102466
BPZ-DT-400/17-L + BPZ-DT-600/17 106422 + 102433	**BPZ-DT-400/17-L-W + BPZ-DT-600/17-W** 106426 + 102457	**BPZ-DS-400/17-L + BPZ-DS-600/17-P** 106374 + 102427	**BPZ-DS-400/17-L-W + BPZ-DS-600/17-P-W** 106378 + 102451	**BPZ-DT-400/17-L + BPZ-DT-600/17-P** 106422 + 102439	**BPZ-DT-400/17-L-W + BPZ-DT-600/17-P-W** 106426 + 102463
BPZ-DT-400/20-L + BPZ-DT-600/20 106423 + 102434	**BPZ-DT-400/20-L-W + BPZ-DT-600/20-W** 106427 + 102458	**BPZ-DS-400/20-L + BPZ-DS-600/20-P** 106375 + 102428	**BPZ-DS-400/20-L-W + BPZ-DS-600/20-P-W** 106379 + 102452	**BPZ-DT-400/20-L + BPZ-DT-600/20-P** 106423 + 102440	**BPZ-DT-400/20-L-W + BPZ-DT-600/20-P-W** 106427 + 102464
BPZ-DT-600/17-L + BPZ-DT-600/17 106424 + 102433	**BPZ-DT-600/17-L-W + BPZ-DT-600/17-W** 106428 + 102457	**BPZ-DS-600/17-L + BPZ-DS-600/17-P** 106376 + 102427	**BPZ-DS-600/17-L-W + BPZ-DS-600/17-P-W** 106420 + 102451	**BPZ-DT-600/17-L + BPZ-DT-600/17-P** 106424 + 102439	**BPZ-DT-600/17-L-W + BPZ-DT-600/17-P-W** 106428 + 102463
BPZ-DT-600/20-L + BPZ-DT-600/20 106425 + 102434	**BPZ-DT-600/20-L-W + BPZ-DT-600/20-W** 106429 + 102458	**BPZ-DS-600/20-L + BPZ-DS-600/20-P** 106377 + 102428	**BPZ-DS-600/20-L-W + BPZ-DS-600/20-P-W** 106421 + 102452	**BPZ-DT-600/20-L + BPZ-DT-600/20-P** 106425 + 102440	**BPZ-DT-600/20-L-W + BPZ-DT-600/20-P-W** 106429 + 102464

xEnergy Distribution Boards

Floor-standing distribution board BP-F-..., IP30

wa_vt03613

vt15218

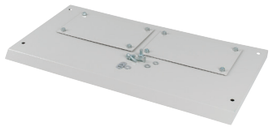

vt06905, wa_vt51413

vt02918, wa_vt51413

Width [mm]	Height [mm]	Height int. [mm]	Add-on canopy for IP31 applications incl. F3A-XP		Plinth 100 mm Side parts 1 pair / Front cover		Plinth 100 mm Side parts 1 pair blind-open for cable guiding between the sections / Front cover	
					Reduced depth of 250 mm	Extended depth of 400 mm		
			RAL 7035 grey	RAL 9016 white	RAL 7035 grey		RAL 7035 grey standard depth of 300 mm	RAL 9016 white
			Cat. No. per unit unit = 1 pc.	Cat. No. per unit unit = 1 pc.	Cat. No. per unit unit = 1 pc.	Cat. No. per unit unit = 1 pc.	Cat. No. per unit unit = 1 pc.	Cat. No. per unit unit = 1 pc.
BP-F-..., IP30 - fully assembled								
400 (13MU/ row)	1760	1650	**BPZ-CNP-400-IP31** 194536	**BPZ-CNP-400-IP31-W** 194541	**BPZ-SS-1/250** 119166 **BPZ-FS-400/1** 293493	**BPZ-SS-1/400** 119165 **BPZ-FS-400/1** 293493	**BPZ-SS-1/300/SET/BO** 119181 **BPZ-FS-400/1** 293493	**BPZ-SS-1/300/SET/BO-W** 119185 **BPZ-FS-400/1-W** 293494
	2060	1950						
600 (24MU/ row)	1760	1650	**BPZ-CNP-600-IP31** 194537	**BPZ-CNP-600-IP31-W** 194542	**BPZ-SS-1/250** 119166 **BPZ-FS-600/1** 293497	**BPZ-SS-1/400** 119165 BPZ-FS-600/1 293497	**BPZ-SS-1/300/SET/BO** 119181 **BPZ-FS-600/1** 293497	**BPZ-SS-1/300/SET/BO-W** 119185 **BPZ-FS-600/1-W** 293498
	2060	1950						
800 (35MU/ row)	1760	1650	**BPZ-CNP-800-IP31** 194538	**BPZ-CNP-800-IP31-W** 194543	**BPZ-SS-1/250** 119166 **BPZ-FS-800/1** 293501	**BPZ-SS-1/400** 119165 **BPZ-FS-800/1** 293501	**BPZ-SS-1/300/SET/BO** 119181 **BPZ-FS-800/1** 293501	**BPZ-SS-1/300/SET/BO-W** 119185 **BPZ-FS-800/1-W** 293502
	2060	1950						
1000 (46MU/ row)	1760	1650	**BPZ-CNP-1000-IP31** 194539	**BPZ-CNP-1000-IP31-W** 194544	**BPZ-SS-1/250** 119166 **BPZ-FS-1000/1** 293505	**BPZ-SS-1/400** 119165 **BPZ-FS-1000/1** 293505	**BPZ-SS-1/300/SET/BO** 119181 **BPZ-FS-1000/1** 293505	**BPZ-SS-1/300/SET/BO-W** 119185 **BPZ-FS-1000/1-W** 293506
	2060	1950						
1200 (57MU/ row)	1760	1650	**BPZ-CNP-1200-IP31** 194540	**BPZ-CNP-1200-IP31-W** 194545	**BPZ-SS-1/250** 119166 **BPZ-FS-1200/1** 293509	**BPZ-SS-1/400** 119165 **BPZ-FS-1200/1** 293509	**BPZ-SS-1/300/SET/BO** 119181 **BPZ-FS-1200/1** 293509	**BPZ-SS-1/300/SET/BO-W** 119185 **BPZ-FS-1200/1-W** 293510
	2060	1950						

xEnergy Distribution Boards

Floor-standing distribution board BP-F-..., IP30

vt02918, wa_vt51413

vt02918, wa_vt51413

vt02818, vt02718

vt02818, vt02718

Plinth 100 mm Side parts 1 pair open-open for cable guiding between the sections / Front cover		Plinth 100 mm / for cable guiding between the sections / Front cover		Plinth 200 mm Side parts 1 pair / Front cover		Plinth 200 mm Side parts 1 pair / Front cover	
		Side parts 1 pair blind-open	Side parts 1 pair open-open				
RAL 7035 grey standard depth of 300 mm	RAL 9016 white	RAL 7035 grey extended depth of 400 mm		RAL 7035 grey standard depth of 300 mm	RAL 9016 white	RAL 7035 grey reduced depth of 250 mm	RAL 7035 grey extended depth of 400 mm
Cat. No. per unit unit = 1 pc.	Cat. No. per unit unit = 1 pc.	Cat. No. per unit unit = 1 pc.	Cat. No. per unit unit = 1 pc.	Cat. No. per unit unit = 1 pc.	Cat. No. per unit unit = 1 pc.	Cat. No. per unit unit = 1 pc.	Cat. No. per unit unit = 1 pc.
BPZ-SS-1/300/SET/00 119182 **BPZ-FS-400/1** 293493	**BPZ-SS-1/300/SET/00-W** 119186 **BPZ-FS-400/1-W** 293494	**BPZ-SS-1/400/SET/BO** 119177 **BPZ-FS-400/1** 293493	**BPZ-SS-1/400/SET/00** 119178 **BPZ-FS-400/1** 293493	**BPZ-SS-2/3** 293517 **BPZ-FS-400/2** 293495	**BPZ-SS-2/3-W** 293518 **BPZ-FS-400/2-W** 293496	**BPZ-SS-2/250** 119170 **BPZ-FS-400/2** 293495	**BPZ-SS-2/400** 119169 **BPZ-FS-400/2** 293495
BPZ-SS-1/300/SET/00 119182 **BPZ-FS-600/1** 293497	**BPZ-SS-1/300/SET/00-W** 119186 **BPZ-FS-600/1-W** 293498	**BPZ-SS-1/400/SET/BO** 119177 **BPZ-FS-600/1** 293497	**BPZ-SS-1/400/SET/00** 119178 **BPZ-FS-600/1** 293497	**BPZ-SS-2/3** 293517 **BPZ-FS-600/2** 293499	**BPZ-SS-2/3-W** 293518 **BPZ-FS-600/2-W** 293500	**BPZ-SS-2/250** 119170 **BPZ-FS-600/2** 293499	**BPZ-SS-2/400** 119169 **BPZ-FS-600/2** 293499
BPZ-SS-1/300/SET/00 119182 **BPZ-FS-800/1** 293501	**BPZ-SS-1/300/SET/ 00-W** 119186 **BPZ-FS-800/1-W** 293502	**BPZ-SS-1/400/SET/BO** 119177 **BPZ-FS-800/1** 293501	**BPZ-SS-1/400/SET/00** 119178 **BPZ-FS-800/1** 293501	**BPZ-SS-2/3** 293517 **BPZ-FS-800/2** 293503	**BPZ-SS-2/3-W** 293518 **BPZ-FS-800/2-W** 293504	**BPZ-SS-2/250** 119170 **BPZ-FS-800/2** 293503	**BPZ-SS-2/400** 119169 **BPZ-FS-800/2** 293503
BPZ-SS-1/300/SET/00 119182 **BPZ-FS-1000/1** 293505	**BPZ-SS-1/300/SET/ 00-W** 119186 **BPZ-FS-1000/1-W** 293506	**BPZ-SS-1/400/SET/BO** 119177 **BPZ-FS-1000/1** 293505	**BPZ-SS-1/400/SET/00** 119178 **BPZ-FS-1000/1** 293505	**BPZ-SS-2/3** 293517 **BPZ-FS-1000/2** 293507	**BPZ-SS-2/3-W** 293518 **BPZ-FS-1000/2-W** 293508	**BPZ-SS-2/250** 119170 **BPZ-FS-1000/2** 293507	**BPZ-SS-2/400** 119169 **BPZ-FS-1000/2** 293507
BPZ-SS-1/300/SET/00 119182 **BPZ-FS-1200/1** 293509	**BPZ-SS-1/300/SET/ 00-W** 119186 **BPZ-FS-1200/1-W** 293510	**BPZ-SS-1/400/SET/BO** 119177 **BPZ-FS-1200/1** 293509	**BPZ-SS-1/400/SET/00** 119178 **BPZ-FS-1200/1** 293509	**BPZ-SS-2/3** 293517 **BPZ-FS-1200/2** 293511	**BPZ-SS-2/3-W** 293518 **BPZ-FS-1200/2-W** 293512	**BPZ-SS-2/250** 119170 **BPZ-FS-1200/2** 293511	**BPZ-SS-2/400** 119169 **BPZ-FS-1200/2** 293511

Description

BP-F-..., IP30 (IP31), enclosure depth 250 / 300 / 400 mm

- Complete cabinets prepared for ProfiSNAP installation system
- Degree of protection IP30
- Impact resistance IK08
- Protection class I (protective earth)
- Cable entry / flange plate individually configurable
- Quick and easy change of the hinge direction, door opening angle ~160°
- Standard plastic cam lock or Swing handler closing mechanism
- Additional wall fixing to avoid tilting
- Enclosure made from powder-coated sheet steel, RAL 7035 / RAL 9016
- Variable interior installation either with "Mounting base frame" or "Mounting side panel" (MSW)

Technical data

	BP-F-...
Electrical	
Type conforms to	IEC/EN 62208
Protection class	I (protective earth)
Degree of protection	IP30 (closed version with door/flansche) IP31 (special add-on canopy BPZ-CNP-...-IP31 required) IP2XC (door open, user access level has to be closed properly with front covers)
Impact resistance	IK08
Rated operational voltage	415 VAC / 50 Hz
Rated current	Max. 630 A (depending on the type of incoming circuit breaker or the busbar system being used)
Earthing concept for the enclosure	
Main earthing	By means of M8 welding bolts
Door earthing	By means of M6 welding bolts

The permissible temperature increases for switchgear assemblies with a rated current of up to 630 A can be evaluated in accordance with section 10.10.4.2 of IEC/EN 61439-1.

For the maximum permissible heat dissipation for all devices inside the distribution board at an ambient temperature of 35° C and ΔT of 20 K / 35 K at an enclosure height of 75 %, please refer to the table on enclosure dimensions; (calculation method acc.to IEC/TR 60890).

Mechanical	
Enclosure	Excellent stability thanks to the welded construction
Material	Sheet steel 1 mm, phosphated and polyester powder coated (structured) with corrosion protection
Colour	Traffic white, RAL 9016 / Light grey RAL 7035
Door	Hinges on the inside, door opening angle ~160° (in case of lateral alignment ~100°) Doors with transparent window individually configurable, hinged either left or right width 1000 / 1200 mm in double-wing design
Type	Flexible interior fitting with installation units ProfiSNAP on base frame or „mounting side panel" (MSW) Mounting base frame: multi-layer construction, installation directly in the enclosure, robust and structured Mounting side panel (MSW): removable mounting insert, external installation, fast and reliable
Locking mechanism	Two-point locking mechanism with standard cam lock (plastic), optional metal lock with standard locking or two-way key bit Three-point locking mechanism with swing handler and rod drive (optional lock cylinder as accessory)
Cable entry	Complete cabinets equipped with two-component membrane flanges on both sides, single cabinets are individually configurable Closed cable entry / flange plate, with two-component flanges equipped or prepared for F3A-flanges
Ambient condition	Indoor installation (Assembly with/without plinth with additional fixing to a wall, „stand-alone" not recommended) Max. ambient temperature +40° C Min. ambient temperature -5° C
Halogen-free, RoHS	< 1%, yes
Accessories	Several base versions with height 100 / 200 mm, other locking mechanism for door closing Transparent doors, add-on canopy (IP31), wall fixing brackets
Delivered as	Complete cabinet prepared for „Mounting base frame" or „MSW" (depending on interior fitting all corresponding parts for „Mounting base frame" respectively „MSW" have to be ordered separately)

Dimensions (mm)

BP-F-..., IP30 (IP31), enclosure depth 250 / 300 / 400 mm

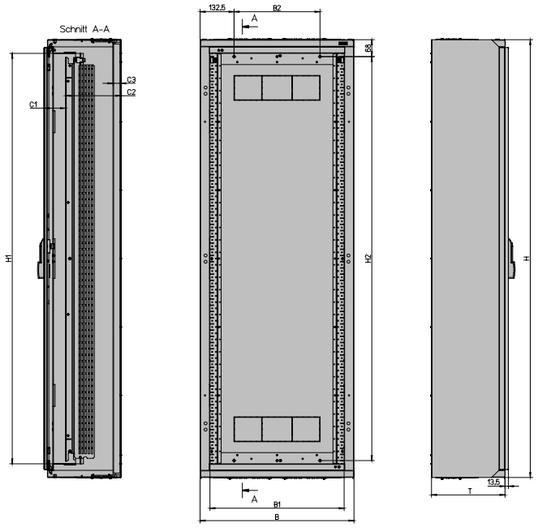

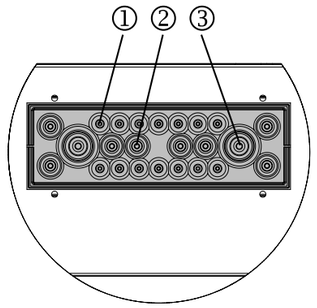

① 14x ø 11 mm
② 8x ø 15 mm
③ 2x ø 28 mm

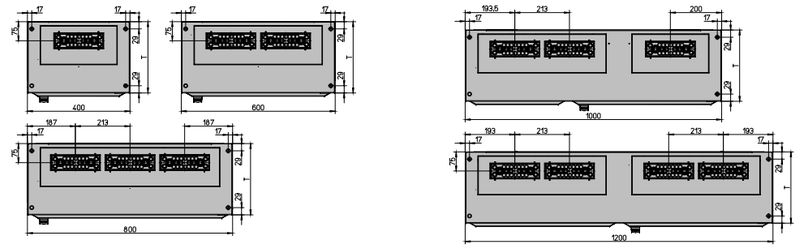

Type	Overall dimensions			Internal dimensions (front plate)		Wall mounting (Enclosure directly)		PSN-MSW		PSN-FPS			Pv [W] (ΔT 20K)	Pv [W] (ΔT 35K)
	Width B	Height H	Depth T	Width B1	Height H1	Width B2	Height H2	C1	C2	C1	C2	C3		
BP-F-400/17/3	400	1760	286.5	320	1650	135	1624	83	215	110	185	30	84	168
BP-F-400/17/3	400	2060	286.5	320	1950	135	1924	83	215	110	185	30	101	202
BP-F-600/17/3	600	1760	286.5	520	1650	335	1624	83	215	110	185	30	126	253
BP-F-600/17/3	600	2060	286.5	520	1950	335	1924	83	215	110	185	30	147	294
BP-F-800/17/3	800	1760	286.5	720	1650	535	1624	83	215	110	185	30	173	347
BP-F-800/17/3	800	2060	286.5	720	1950	535	1924	83	215	110	185	30	189	380
BP-F-1000/17/3	1000	1760	286.5	920	1650	735	1624	83	215	110	185	30	206	413
BP-F-1000/17/3	1000	2060	286.5	920	1950	735	1924	83	215	110	185	30	222	445
BP-F-1200/17/3	1200	1760	286.5	1120	1650	935	1624	83	215	110	185	30	237	474
BP-F-1200/17/3	1200	2060	286.5	1120	1950	935	1924	83	215	110	185	30	259	520
BP-F-400/20/2,5	400	2060	236.5	320	1950	135	1924	78	170	-	-	-	84	168
BP-F-600/20/2,5	600	2060	236.5	520	1950	335	1924	78	170	-	-	-	127	255
BP-F-800/20/2,5	800	2060	236.5	720	1950	535	1924	78	170	-	-	-	177	355
BP-F-1000/20/2,5	1000	2060	236.5	920	1950	735	1924	78	170	-	-	-	205	410
BP-F-1200/20/2,5	1200	2060	236.5	1120	1950	935	1924	78	170	-	-	-	240	481
BP-F-400/20/4	400	2060	386.5	320	1950	135	1924	98	300	-	-	30	128	258
BP-F-600/20/4	600	2060	386.5	520	1950	335	1924	98	300	-	-	30	183	367
BP-F-800/20/4	800	2060	386.5	720	1950	535	1924	98	300	-	-	30	217	435
BP-F-1000/20/4	1000	2060	386.5	920	1950	735	1924	98	300	-	-	30	257	515
BP-F-1200/20/4	1200	2060	386.5	1120	1950	935	1924	98	300	-	-	30	292	585

Change of clip down handle for change of direction of opening of door

1. Demounting of rods – removing from lock mechanism
2. Demounting of rods – taking out from fastening lugs

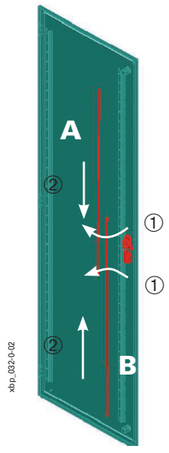

Detail: Before

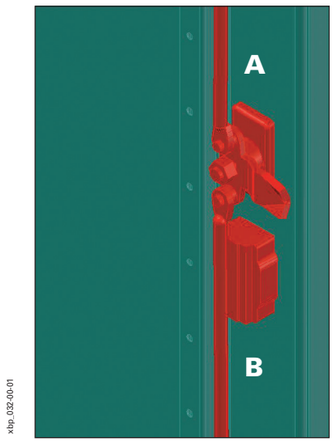

Detail: After

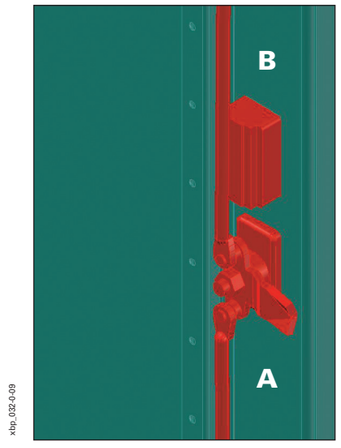

Sheet Steel Doors, BPZ-DS and Transparent Doors BPZ-DT

- Front-mounted
- Quick mounting and removing of the door
- Right or left hinged
- Opening angle ~160°
- 1-point lock through rotary lock, 3-point lock through clip-down handle
- Material: Sheet steel, powder-coated, RAL 7035 or RAL 9016
  BPZ-DT: Sheet steel framework incl. ESG 4 mm
- Weight (kg) BPZ-DS:

Width (mm)	400	600	800	600+400	600+600
Height 1700	6.2	9	11.8	9+6.5	9+9.1
Height 2000	7.3	10.6	13.8	10.6+7.7	10.6+10.6

- Weight (kg) BPZ-DT:

Width (mm)	400	600	800	600+400	600+600
Height 1700	8.1	13.3	16	13.3+10.9	13.3+16.9
Height 2000	9.4	15.6	18.6	15.6+12.7	15.6+19.8

- Delivered as: 1 Door

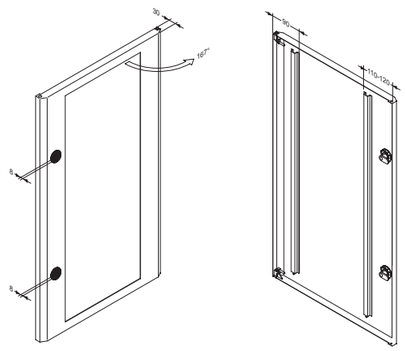

Add-on canopy for IP31 applications, BPZ-CNP

- Intended to be used for floor-standing distribution boards to upgrade from IP30 to IP31
- Possible for new installations as well as for retrofit in existing applications
- Material: Sheet steel, powder-coated, RAL 7035 or RAL 9016, thickness 1.25 mm
- Delivered as: 1 canopy, F3A-XP flanges, fixing material

Dimensions (mm)

Type	Outside width	incl. F3A-XP flange
	A1	
BP-TBP1-400-F3A-IP31	405	Yes (1 pc.)
BP-TBP1-600-F3A-IP31	605	Yes (2 pcs.)
BP-TBP1-800-F3A-IP31	805	Yes (3 pcs.)
BP-TBP1-1000-F3A-IP31	1005	Yes (3 pcs.)
BP-TBP1-1200-F3A-IP31	1205	Yes (4 pcs.)

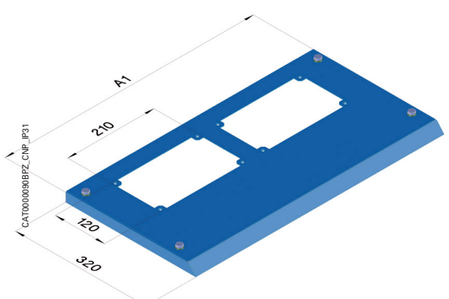

BP-MN-..., IP2XC - fully assembled

wa_vt24013

vt06905, wa_vt51413

Width [mm]	Height [mm]	Height int. [mm]	Open distribution board depth 175 mm welded construction / IP2XC wall-mounted / floor-standing shift-back flange on top / bottom closed / without door incl. MSW mounting insert BPZ-MES	Open distribution board depth 175 mm welded construction / IP2XC wall-mounted / floor-standing shift-back flange on top / bottom closed / without door	Plinth 100 mm [Plinth 200 mm] Side parts 1 pair / Front cover
			RAL 7035 grey	RAL 7035 grey Empty	RAL 7035 grey
			Cat. No. per unit unit = 1 pc.	Cat. No. per unit unit = 1 pc.	Cat. No. per unit unit = 1 pc.
600 (24MU/ row)	400	350	**BP-MN-MES-600/4-ST** 143130	**BP-MN-600/4/1,75** 119197	**BPZ-MN-SS/1/175** 119214
	700	650	**BP-MN-MES-600/7-ST** 143133	**BP-MN-600/7/1,75** 119198	**[BPZ-MN-SS/2/175]** [119215]
	1000	950	**BP-MN-MES-600/10-ST** 143136	**BP-MN-600/10/1,75** 119199	**BPZ-MN-FS-600/1** 120685
	1200	1150	**BP-MN-MES-600/12-ST** 143139	**BP-MN-600/12/1,75** 119200	**[BPZ-MN-FS-600/2]** [120686]
	1500	1450	**BP-MN-MES-600/15-ST** 143142	**BP-MN-600/15/1,75** 119201	
	1700	1650	—	**BP-MN-600/17/1,75** 119202	
	2000	1950	—	**BP-MN-600/20/1,75** 119203	
800 (35MU/ row)	1000	950	**BP-MN-MES-800/10-ST** 143145	**BP-MN-800/10/1,75** 119204	**BPZ-MN-SS/1/175** 119214
	1200	1150	**BP-MN-MES-800/12-ST** 143148	**BP-MN-800/12/1,75** 119205	**[BPZ-MN-SS/2/175]** [119215]
	1500	1450	**BP-MN-MES-800/15-ST** 143151	**BP-MN-800/15/1,75** 119206	**BPZ-MN-FS-800/1** 120687
	1700	1650	—	**BP-MN-800/17/1,75** 119207	**[BPZ-MN-FS-800/2]** [120688]
	2000	1950	—	**BP-MN-800/20/1,75** 119208	
1000 (46MU/ row)	1000	950	**BP-MN-MES-1000/10-ST** 143154	**BP-MN-1000/10/1.75** 119209	**BPZ-MN-SS/1/175** 119214
	1200	1150	**BP-MN-MES-1000/12-ST** 143157	**BP-MN-1000/12/1.75** 119210	**[BPZ-MN-SS/2/175]** [119215]
	1500	1450	**BP-MN-MES-1000/15-ST** 143160	**BP-MN-1000/15/1.75** 119211	**BPZ-MN-FS-1000/1** 120689
	1700	1650	—	**BP-MN-1000/17/1.75** 119212	**[BPZ-MN-FS-1000/2]** [120690]
	2000	1950	—	**BP-MN-1000/20/1.75** 119213	

193170_LDO, 293313_LDO, 501316_LDO1

Distribution Boards

Distribution Boards

• Chapter 0
Table of Contents ..... Page 3

• Chapter 1
Field distribution boards protection class II ..... Page 4
1.1 Surface-mounted field distribution board EWK-G.., IP31 ..... Page 5

• Chapter 2
Enclosures / switchgear cabinets for installation system EP in protection class I and II ..... Page 10
2.1 Surface-mounted and floor-standing distribution board EMC2-H.../55-W, IP55 ..... Page 11
2.2 Surface-mounted distribution board BP-O-...-EP-W, IP31 ..... Page 20
2.3 Surface-mounted distribution board BPM-O-...-EP, IP55 ..... Page 26
2.4 Floor-standing distribution board BPM-F-...-EP, IP55 ..... Page 29

• Chapter 3
EP installation system - standard modules / mounting kits ..... Page 34
3.1 EP installation system - standard modules / Fitting-kits, Width 250 mm ..... Page 36
3.2 EP installation system - standard modules / Fitting-kits, Width 500 mm ..... Page 40
3.3 EP installation system - standard modules / Fitting-kits, Width 750 mm ..... Page 44
3.4 EP installation system - standard modules / Fitting-kits, Technical data ..... Page 46

• Chapter 4
EP installation system - general accessories ..... Page 53

• Chapter 5
Enclosures / switchgear cabinets for installation system ProfiSNAP ..... Page 66
5.1 Surface-mounted distribution board BP-O-..., IP30 (pre-assembled) ..... Page 67
5.2 Surface-mounted distribution board BP-O-..., IP30 (flat-pack, grey) ..... Page 72
5.3 Surface-mounted distribution board BP-O-..., IP30 (flat-pack, white) ..... Page 74
5.4 Surface-mounted distribution board BPM-O-..., IP55 ..... Page 95
5.5 Flush-mounted distribution board BP(A/M)-U-3S-..., IP30/IP43/IP54 ..... Page 105
5.6 Floor-standing distribution board BP-F-..., IP30 ..... Page 119
5.7 Outdoor distribution board BP-VF/DZ..., IP44 ..... Page 130
5.8 Floor-standing distribution board BPM-F-..., IP55 ..... Page 137
5.9 Shared compartments inside distribution boards BP(M)-O, BP(M)-F ..... Page 149

• Chapter 6
ProfiSNAP installation system - components for interior fitting ..... Page 154
6.1 Front plates, blind and with 45mm cut-out for DIN-rail devices ..... Page 156
6.2 Mounting kits for Moulded Case Circuit Breaker ..... Page 164
6.3 Mounting kits for Fuse Switch Disconnectors ..... Page 182
6.4 Mounting kits for BZM, Dumeco and QSA ..... Page 188
6.5 Mounting kits for Earthing and Neutral conductors ..... Page 189
6.6 Mounting plates for universal fixing of different components ..... Page 192
6.7 Mounting kits for Energy Meters and various metering equipment ..... Page 200

• Chapter 7
ProfiSNAP installation system - general accessories ..... Page 207

• Chapter 8
General accessories xEnergy Basic ..... Page 228

• Chapter 9
Overall technical data xEnergy Basic ..... Page 248

• Chapter 10
Verification of temperature rise by testing - selection of reference examples ..... Page 253

System overview

BP-VF/DZ-..., IP44, enclosure depth 250 / 320 mm

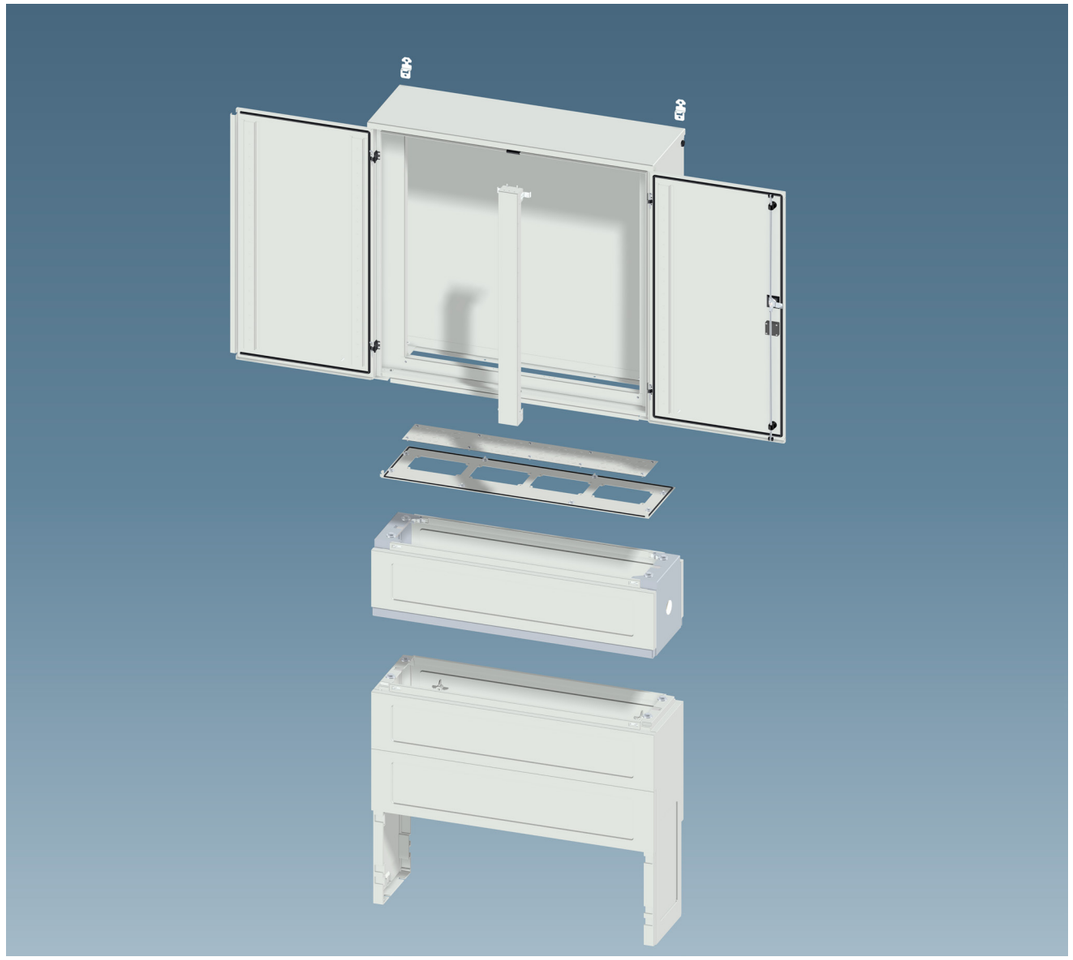

1. Perfectly designed for using it in an unprotected outdoor environment. (IP44, IK10)
2. Solid materials have been used to withstand harsh environment like salty and contaminated air as well as all weather conditions.
3. The new series is fully compatible with Eaton's brand new ProfiSNAP system components.
4. External doors with a swing of 180 degrees incl. three-point locking mechanism and swing handle for double-cylinder lock by standard.
5. The overall dimensions in regard to width and depth complies with standard DIN sizes of similar outdoor applications.
6. Passive ventilation from the base through the cabinet (by ventilation plugs) to the rain canopy avoids condensation inside the outdoor cabinet.
7. All types can be installed on a ground-mounted base, platform-mounted or wall-mounted by adding some accessories.
8. The bottom plate used for all-mounting (and mast fixing) compromises cable gland knock-outs and F3A openings in one design.
9. Thanks to accessory parts BPZ-USF a vertical split of 800 and 1100 mm wide cabinets can be realized.
10. Aluminium has a lot of benefits against polyester cabinets like better thermal conductivity, more lightweight constructed, extended long-time durability, more flexibility in special applications, etc.

xEnergy Distribution Boards

Outdoor distribution board BP-VF/DZ, IP44

xEnergy Basic

Sheet 1/2

			EP-505015_LDO	EP-505025_L	EP-505029_L	EP-505033_L 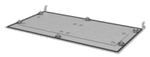
Width [mm]	Height [mm]	Height int. [mm]	Outdoor distribution board IP44 Freestanding application (optional for wall-mounting) / made of sea-water resistant aluminum / applicable for ground- and platform mounted bases / especially designed to withstand all weather conditions in an unprotected outdoor environment / vandalism-proof design	Glass fiber reinforced polyester base for ground-mounted applications / standard DIN-dimensions / incl. filling material for preventing rising damp / nominal height above ground = 300 mm / vandalism-proof design	Powder-coated heavy-duty base for platform-mounted applications / standard DIN-dimensions / front and back cover made of polyester nominal height = 300 mm / vandalism-proof design	Flange plate / cable entry plate especially designed for BP-VF/DZ / modular design with knock-outs and cut-outs for F3A flanges / 1x F3A (400 mm) up to 4x F3A (1100 mm) vandalism-proof design
			RAL 7035 grey Empty	similar to RAL 7035 grey	similar to RAL 7035 grey	RAL 7035 grey
			Cat. No. per unit unit = 1 pc.	Cat. No. per unit unit = 1 pc.	Cat. No. per unit unit = 1 pc.	Cat. No. per unit unit = 1 pc.
400 (13MU/ row)	760	650	**BP-VF/DZ-400/7-S00** EP-505010	**BP-VF/SG-400/600-S00** EP-505024	**BP-VF/SP-400/300-S00** EP-505028	**BP-VF/FLP-400-BL/F3A** EP-505032
	1060	950	**BP-VF/DZ-400/10-S00** EP-505011			
	1260	1150	**BP-VF/DZ-400/12-S00** EP-505012			
600 (24MU/ row)	760	650	**BP-VF/DZ-600/7-S0** EP-505013	**BP-VF/SG-600/900-S0** EP-505025	**BP-VF/SP-600/300-S0** EP-505029	**BP-VF/FLP-600-BL/F3A** EP-505033
	1060	950	**BP-VF/DZ-600/10-S0** EP-505014			
	1260	1150	**BP-VF/DZ-600/12-S0** EP-505015			
	1560	1450	**BP-VF/DZ-600/15-S0** EP-505016			
800 (35MU/ row)	760	650	**BP-VF/DZ-800/7-S1** EP-505017	**BP-VF/SG-800/900-S1** EP-505026	**BP-VF/SP-800/300-S1** EP-505030	**BP-VF/FLP-800-BL/F3A** EP-505034
	1060	950	**BP-VF/DZ-800/10-S1** EP-505018			
	1260	1150	**BP-VF/DZ-800/12-S1** EP-505019			
	1560	1450	**BP-VF/DZ-800/15-S1** EP-505020			
1100 (46MU/ row)	1060	950	**BP-VF/DZ-1100/10-S2** EP-505021	**BP-VF/SG-1100/900-S2** EP-505027	**BP-VF/SP-1100/300-S2** EP-505031	**BP-VF/FLP-1100-BL/F3A** EP-505035
	1260	1150	**BP-VF/DZ-1100/12-S2** EP-505022			
	1560	1450	**BP-VF/DZ-1100/15-S2** EP-505023			

xEnergy Distribution Boards

Outdoor distribution board BP-VF/DZ, IP44

5.7

EP-505036_L	EP-505037_L	wa_ vt24113_L	wa_ vt61813_L
Wall fixing brackets (1 set = 4 brackets) especially designed for BP-VF/DZ / vertical installation at the top and bottom / stainless steel (2 mm)	Mast fixing kit up to 800 mm width especially designed for BP-VF/DZ / incl. various accessories for proper installation / 2 fixing rails for top and bottom connection (cut-to-size) / galvanized sheet steel and stainless steel parts	MSW mounting insert especially designed for BP-VF/DZ / incl. front covers, DIN-rails (distance between rails mainly 150 mm)	Separation frame set especially designed for BP-VF/DZ / either 400/400 (at 800 mm width) or 600/400 (at 1100 mm width) / for MSW application only / sheet steel (1 mm)
galvanized appearance	galvanized appearance	RAL 7035 grey	RAL 7035 grey
Cat. No. per unit unit = 1 pc.	Cat. No. per unit unit = 1 pc.	Cat. No. per unit unit = 1 pc.	Cat. No. per unit unit = 1 pc.
BP-VF/WFB-F-V2A EP-505036	**BP-VF/MFK-S00/S0/S1** EP-505037	**BPZ-MES-400/7-ST** 119307	—
		BPZ-MES-400/10-ST 119308	—
		BPZ-MES-400/12-ST 119309	—
BP-VF/WFB-F-V2A EP-505036	**BP-VF/MFK-S00/S0/S1** EP-505037	**BPZ-MES-600/7-ST** 119311	—
		BPZ-MES-600/10-ST 119312	—
		BPZ-MES-600/12-ST 119313	—
		BPZ-MES-600/15-ST 119314	—
BP-VF/WFB-F-V2A EP-505036	**BP-VF/MFK-S00/S0/S1** EP-505037	—	—
		BPZ-MES-800/10-ST 119317	**BPZ-USF-10** 119302
		BPZ-MES-800/12-ST 119318	**BPZ-USF-12** 119303
		BPZ-MES-800/15-ST 119319	**BPZ-USF-15** 119304
BP-VF/WFB-F-V2A EP-505036	—	**BPZ-MES-1000/10-ST** 119322	**BPZ-USF-10** 119302
		BPZ-MES-1000/12-ST 119323	**BPZ-USF-12** 119303
		BPZ-MES-1000/15-ST 119324	**BPZ-USF-15** 119304

Description

BP-VF/DZ-…, IP44, enclosure depth 250 / 320 mm

- Complete cabinets prepared for ProfiSNAP installation system
- Weather-resistant, impact resistant and shock-proof, flame resistant
- Degree of protection IP44
- Impact resistance IK10
- Protection class I (protective earth)
- Dedicated for freestanding installation on ground- or platform-mounted bases (sockets)
- Compatible with standard bases (sockets) acc.to DIN 43629-2 in size 0, 1 and 2 (size 00 in reduced depth acc.to DIN 43629-4)
- Separate flange plate available when using BP-VF/DZ as wall-mounted cabinet
- Cable entry either directly via cable glands thanks to prepared knock-outs or via our established F3A flanges
- Quick and easy change of the hinge direction, door opening angle ~180°
- 3-point locking mechanism by the use of a swing handle applicable for double cylinder lock by standard
- Direct wall mounting possible, wall-fixing brackets optionally included in the accessories
- Enclosure made from powder-coated sea-water resistant aluminum, RAL 7035
- For vertical split inside the cabinet please refer to our BPZ-USF kits for enabling 400/400 (at 800 mm width) or 600/400 (at 1100 mm width)
- Thanks to two membrane glands on both sides there is great airflow for passive ventilation guaranteed even when bottom part is closed
- Bottom cover strip can be easily removed for inserting cables especially when used as ground-mounted cabinet
- Variable interior installation with "Mounting side wall" (MSW)

Technical data

	BP-VF/DZ-…
Electrical	
Type conforms to	IEC/EN 62208
Protection class	I (protective earth)
Degree of protection	IP44 (closed version either with base or flange plate) IP2XC (open door, the installation level is properly protected by covers)
Impact resistance	IK10
Rated operational voltage	415 VAC / 50 Hz
Rated current	Max. 630 A (depending on the type of incoming circuit breaker or the busbar system being used)
Earthing concept for the enclosure	
Main earthing	By means of M6 welding bolts
Door earthing	By means of M6 welding bolts

The permissible temperature increases for switchgear assemblies with a rated current of up to 630 A can be evaluated in accordance with section 10.10.4.2 of IEC/EN 61439-1.

For the maximum permissible heat dissipation for all devices inside the distribution board at an ambient temperature of 35° C and ΔT of 20 K / 35 K at an enclosure height of 75 %, please refer to the table on enclosure dimensions; (calculation method acc.to IEC/TR 60890).

Mechanical	
Enclosure	Lightweight and stable construction (welded)
Material	Sea-water resistant aluminum 1.5 mm, phosphated and polyester powder coated (structured) with corrosion protection
Colour	RAL 7035, light grey
Door	With encircling foamed sealing, hinges on the inside, door opening angle ~180°, hinged either left or right, width 1100 mm in double-door design
Type	Flexible interior fitting with installation units ProfiSNAP by using „mounting side wall" (MSW) option Mounting side wall (MSW): removable mounting insert, external installation, fast and reliable
Locking mechanism	3-point locking with swing handle (double cylinder lock by standard)
Cable entry	Either via open bottom plate when base-mounted or via closed flange plate when wall-mounted
Ambient condition	Outdoor installation severity B (typically freestanding on dedicated bases, optionally wall-mounting) Max. ambient temperature +40° C Min. ambient temperature -25° C
Halogen-free, RoHS	< 1%, yes
Accessories	Several base versions with height 300 up to 900 mm, flange plates for cable entry, wall fixing brackets, mast fixing kit, different type of F3A flanges for cable entry, separation frame kit for vertical split;
Delivered as	Complete cabinet prepared for „mounting side wall" (MSW) in the respective height / width (depending on interior fitting all corresponding parts for the right installation method have to be ordered separately)

Dimensions (mm)

BP-VF/DZ-…, IP44, enclosure depth 250 / 320 mm

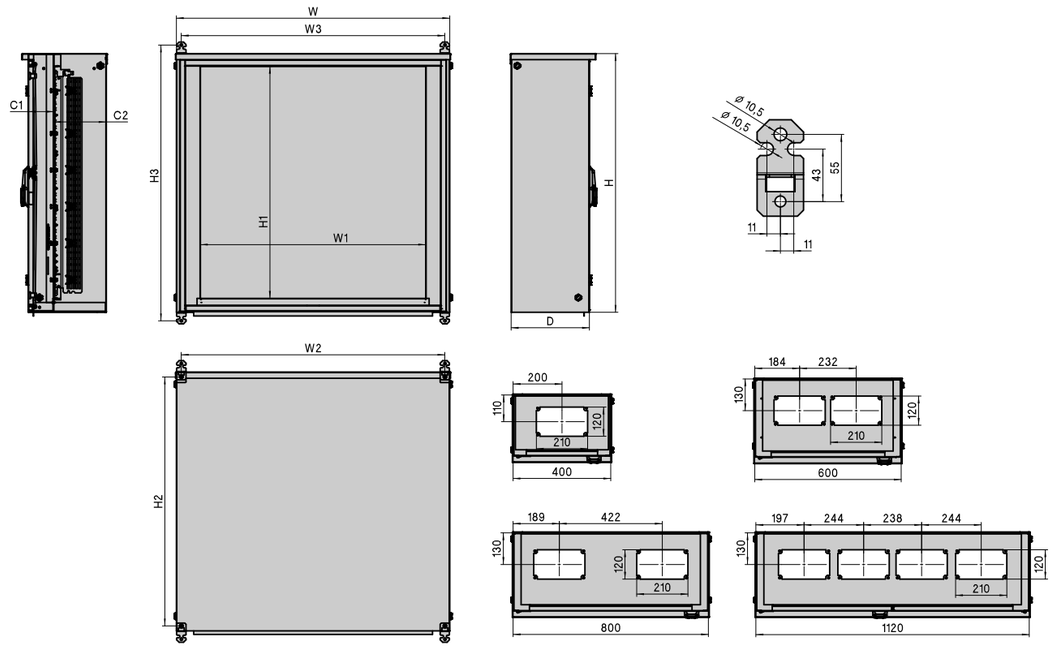

Type	Overall dimensions			Internal dimensions (Front plate)		Wall mounting (Enclosure directly)		Wall mounting (via fixing bracket set)		PSN-MSW		Pv [W] (ΔT 20K)	Pv [W] (ΔT 20K)	Pv [W] (ΔT 35K)	Pv [W] (ΔT 35K)
	Width W	Height H	Depth D	Width W1	Height H1	Width W2	Height H2	Width W3	Height H3	C1	C2	Free-standing	Wall-mounting	Free-standing	Wall-mounting
BP-VF/DZ-400/7-S00	400	760	250	320	650	360	720	360	830	70	177	59	52	118	105
BP-VF/DZ-400/10-S00		1060			950		1020		1130			55	67	111	135
BP-VF/DZ-400/12-S00		1260			1150		1220		1330			61	56	123	112
BP-VF/DZ-600/7-S0	600	760	320	520	650	560	720	560	830	105	212	73	68	146	136
BP-VF/DZ-600/10-S0		1060			950		1020		1130			93	80	187	161
BP-VF/DZ-600/12-S0		1260			1150		1220		1330			117	94	234	189
BP-VF/DZ-600/15-S0		1560			1450		1520		1630			137	121	275	242
BP-VF/DZ-800/7-S1	800	760	320	720	650	760	720	760	830	105	212	95	84	191	168
BP-VF/DZ-800/10-S1		1060			950		1020		1130			136	114	273	228
BP-VF/DZ-800/12-S1		1260			1150		1220		1330			155	135	310	270
BP-VF/DZ-800/15-S1		1560			1450		1520		1630			189	158	379	316
BP-VF/DZ-1100/10-S2	1120	1060	320	920	950	1080	1020	1080	1130	105	212	195	163	392	326
BP-VF/DZ-1100/12-S2		1260			1150		1220		1330			220	191	441	383
BP-VF/DZ-1100/15-S2		1560			1450		1520		1630			240	219	481	439

System Overview

BPM-F-..., IP55

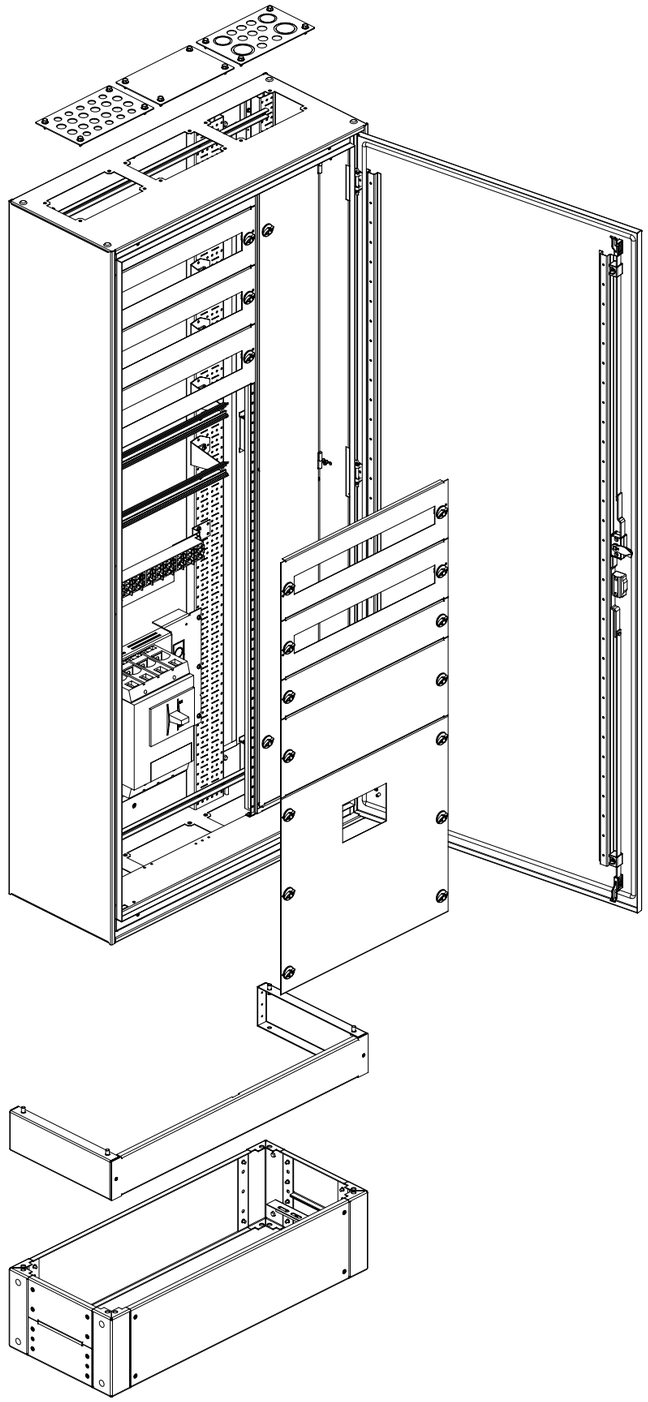

xEnergy Distribution Boards

Floor-standing distribution board BPM-F-..., IP55

			vt39317_r	wa_vt03613	vt40717	vt104514
Width [mm]	Height [mm]	Height int. [mm]	Pre-assembled configuration individual installation / Prepared for F3A-flanges on top/bottom 7 Door with clip-down handle BPZ-SH-L 7 Standard depth of 320 mm	Pre-assembled configuration installation back frame / Prepared for F3A-flanges on top/bottom / Door with clip-down handle BPZ-SH-L / Extended depth of 400 mm Dedicated as add-on connection cabinet		Pre-assembled configuration individual installation / Prepared for F3A-flanges on top/bottom / Without door / Standard depth of 320 mm
			RAL 7035 grey Empty	RAL 7035 grey Empty		RAL 7035 grey Empty
			Cat. No. per unit unit = 1 pc.	Cat. No. per unit unit = 1 pc.		
BPM-F-..., IP55 - fully assembled						
400 (13MU/ row)	1760	1650	**BPM-F-400/17-P** 111047	**BPM-F-400/17/4-P** 193209		-
	2060	1950	**BPM-F-400/20-P** 111048	**BPM-F-400/20/4-P** 193210		-
600 (24MU/ row)	1760	1650	**BPM-F-600/17-P** 111049	**BPM-F-600/17/4-P** 193211		**BPM-F-600/17-F** 174362
	2060	1950	**BPM-F-600/20-P** 111050	**BPM-F-600/20/4-P** 193212		**BPM-F-600/20-F** 174363
800 (35MU/ row)	1760	1650	**BPM-F-800/17-P** 111051	**BPM-F-800/17/4-P** 193213		**BPM-F-800/17-F** 174367
	2060	1950	**BPM-F-800/20-P** 111052	**BPM-F-800/20/4-P** 193214		**BPM-F-800/20-F** 174368
1000 (46MU/ row)	1760	1650	**BPM-F-1000/17-P** 111053	**BPM-F-1000/17/4-P** 193215		**BPM-F-1000/17-F** 174370
	2060	1950	**BPM-F-1000/20-P** 111054	**BPM-F-1000/20/4-P** 193216		**BPM-F-1000/20-F** 174371
1200 (57MU/ row)	1760	1650	**BPM-F-1200/17-P** 111055	**BPM-F-1200/17/4-P** 193217		**BPM-F-1200/17-F** 193249
	2060	1950	**BPM-F-1200/20-P** 111056	**BPM-F-1200/20/4-P** 193218		**BPM-F-1200/20-F** 193250

xEnergy Distribution Boards

Floor-standing distribution board BPM-F-..., IP55

5.8

vt105014	vt32514	wa_vt23313	vt40317	EP-502148_L	EP-502141_L	EP-502581_L
Sheet metal door / Clip-down handle	Sheet metal door (transparent) / Clip-down handle	Cable arrangement / Plinth 100 mm / Cable strain-relief rail / Standard depth of 320 mm	Extended depth of 400 mm	Installation back frame / Frontplate support	MSW installation / Mounting Side Wall (MSW) with standard depth	MSW installation / Mounting Side Wall (MSW) with extended depth
RAL 7035 grey	RAL 7035 grey	RAL 7035 grey				
Cat. No. per unit unit = 1 pc.	Cat. No. per unit unit = 1 pc.	Cat. No. per unit unit = 1 pc.	Cat. No. per unit unit = 1 pc.	Cat. No. per unit unit = 1 pc.	Cat. No. per unit unit = 1 pc.	Cat. No. per unit unit = 1 pc.
-	-	**BPZ-KR41/320** 116285 **BPZ-KFS-400** 116293	**BPZ-KR41/400** 193219 **BPZ-KFS-400** 116293	**PSN-FPS/17** EP-502147	**PSN-MSW/17** EP-502140	**PSN-MSW/17-EXT** EP-502580
-	-			**PSN-FPS/20** EP-502148	**PSN-MSW/20** EP-502141	**PSN-MSW/20-EXT** EP-502581
BPZ-DMS-600/17-P 174342	**BPZ-DMT-600/17-P** 173585	**BPZ-KR61/320** 116287 **BPZ-KFS-600** 116294	**BPZ-KR61/400** 193220 **BPZ-KFS-600** 116294	**PSN-FPS/17** EP-502147	**PSN-MSW/17** EP-502140	**PSN-MSW/17-EXT** EP-502580
BPZ-DMS-600/20-P 174343	**BPZ-DMT-600/20-P** 173586			**PSN-FPS/20** EP-502148	**PSN-MSW/20** EP-502141	**PSN-MSW/20-EXT** EP-502581
BPZ-DMS-800/17-P 174347	**BPZ-DMT-800/17-P** 173592	**BPZ-KR81/320** 187910 BPZ-KFS-800 187892	**BPZ-KR81/400** 193221 BPZ-KFS-800 187892	**PSN-FPS/17** EP-502147	**PSN-MSW/17** EP-502140	**PSN-MSW/17-EXT** EP-502580
BPZ-DMS-800/20-P 174348	**BPZ-DMT-800/20-P** 173593			**PSN-FPS/20** EP-502148	**PSN-MSW/20** EP-502141	**PSN-MSW/20-EXT** EP-502581
BPZ-DMS-400/17-L + BPZ-DMS-600/17-R-P 193251 + 193253	**BPZ-DMT-400/17-L + BPZ-DMT-600/17-R-P** 193257 + 193259	**BPZ-KR101/320** 187890 **BPZ-KFS-1000** 187893	**BPZ-KR101/400** 193222 **BPZ-KFS-1000** 187893	**PSN-FPS/17** EP-502147	**PSN-MSW/17** EP-502140	**PSN-MSW/17-EXT** EP-502580
BPZ-DMS-400/20-L + BPZ-DMS-600/20-R-P 193254 + 193256	**BPZ-DMT-400/20-L + BPZ-DMT-600/20-R-P** 193260 + 193262			**PSN-FPS/20** EP-502148	**PSN-MSW/20** EP-502141	**PSN-MSW/20-EXT** EP-502581
BPZ-DMS-600/17-L + BPZ-DMS-600/17-R-P 193252 + 193253	**BPZ-DMT-600/17-L + BPZ-DMT-600/17-R-P** 193258 + 193259	**BPZ-KR121/320** 116291 **BPZ-KFS-1200** 116296	**BPZ-KR121/400** 193223 **BPZ-KFS-1200** 116296	**PSN-FPS/17** EP-502147	**PSN-MSW/17** EP-502140	**PSN-MSW/17-EXT** EP-502580
BPZ-DMS-600/20-L + BPZ-DMS-600/20-R-P 193255 + 193256	**BPZ-DMT-600/20-L + BPZ-DMT-600/20-R-P** 193261 + 193262			**PSN-FPS/20** EP-502148	**PSN-MSW/20** EP-502141	**PSN-MSW/20-EXT** EP-502581

vt39317_r

vt06905, wa_vt51413

vt02918, wa_vt51413

vt02918, wa_vt51413

Width [mm]	Height [mm]	Height int. [mm]	Plinth 100 mm Side parts 1 pair / Front cover		Plinth 100 mm Side parts 1 pair blind-open for cable guiding between the sections / Front cover		Plinth 100 mm Side parts 1 pair open-open for cable guiding between the sections / Front cover	
			RAL 7035 grey standard depth of 320 mm	RAL 9016 white	RAL 7035 grey standard depth of 320 mm	RAL 9016 white	RAL 7035 grey standard depth of 320 mm	RAL 9016 white
			Cat. No. per unit unit = 1 pc.	Cat. No. per unit unit = 1 pc.	Cat. No. per unit unit = 1 pc.	Cat. No. per unit unit = 1 pc.	Cat. No. per unit unit = 1 pc.	Cat. No. per unit unit = 1 pc.
BPM-F-..., IP55 - fully assembled								
400 (13MU/ row)	1760	1650	**BPZ-SS-1/320** 112348 **BPZ-FS-400/1** 293493	**BPZ-SS-1/320-W** 112350 **BPZ-FS-400/1-W** 293494	**BPZ-SS-1/320/SET/BO** 119179 **BPZ-FS-400/1** 293493	**BPZ-SS-1/320/SET/BO-W** 119183 **BPZ-FS-400/1-W** 293494	**BPZ-SS-1/320/SET/OO** 119180 **BPZ-FS-400/1** 293493	**BPZ-SS-1/320/SET/OO-W** 119184 **BPZ-FS-400/1-W** 293494
	2060	1950						
600 (24MU/ row)	1760	1650	**BPZ-SS-1/320** 112348 **BPZ-FS-600/1** 293497	**BPZ-SS-1/320-W** 112350 **BPZ-FS-600/1-W** 293498	**BPZ-SS-1/320/SET/BO** 119179 **BPZ-FS-600/1** 293497	**BPZ-SS-1/320/SET/BO-W** 119183 **BPZ-FS-600/1-W** 293498	**BPZ-SS-1/320/SET/OO** 119180 **BPZ-FS-600/1** 293497	**BPZ-SS-1/320/SET/OO-W** 119184 **BPZ-FS-600/1-W** 293498
	2060	1950						
800 (35MU/ row)	1760	1650	**BPZ-SS-1/320** 112348 **BPZ-FS-800/1** 293501	**BPZ-SS-1/320-W** 112350 **BPZ-FS-800/1-W** 293502	**BPZ-SS-1/320/SET/BO** 119179 **BPZ-FS-800/1** 293501	**BPZ-SS-1/320/SET/BO-W** 119183 **BPZ-FS-800/1-W** 293502	**BPZ-SS-1/320/SET/OO** 119180 **BPZ-FS-800/1** 293501	**BPZ-SS-1/320/SET/OO-W** 119184 **BPZ-FS-800/1-W** 293502
	2060	1950						
1000 (46MU/ row)	1760	1650	**BPZ-SS-1/320** 112348 **BPZ-FS-1000/1** 293505	**BPZ-SS-1/320-W** 112350 **BPZ-FS-1000/1-W** 293506	**BPZ-SS-1/320/SET/BO** 119179 **BPZ-FS-1000/1** 293505	**BPZ-SS-1/320/SET/BO-W** 119183 **BPZ-FS-1000/1-W** 293506	**BPZ-SS-1/320/SET/OO** 119180 **BPZ-FS-1000/1** 293505	**BPZ-SS-1/320/SET/OO-W** 119184 **BPZ-FS-1000/1-W** 293506
	2060	1950						
1200 (57MU/ row)	1760	1650	**BPZ-SS-1/320** 112348 **BPZ-FS-1200/1** 293509	**BPZ-SS-1/320-W** 112350 **BPZ-FS-1200/1-W** 293510	**BPZ-SS-1/320/SET/BO** 119179 **BPZ-FS-1200/1** 293509	**BPZ-SS-1/320/SET/BO-W** 119183 **BPZ-FS-1200/1-W** 293510	**BPZ-SS-1/320/SET/OO** 119180 **BPZ-FS-1200/1** 293509	**BPZ-SS-1/320/SET/OO-W** 119184 **BPZ-FS-1200/1-W** 293510
	2060	1950						

vt02818, vt02718

vt40217

EP-502494_L

EP-502497_L

Plinth 200 mm Side parts 1 pair / Front cover		Cable arrangement plinth 200 mm / cable strain-relief rail		Internal cable duct as complete kit for shared composition incl. mounting pillars, compartment door and protective cover	
RAL 7035 grey standard depth of 320 mm	RAL 9016 white	RAL 7035 grey standard depth of 320 mm	extended depth of 400 mm	RAL 7035 grey compartment width 200 mm	compartment width 400 mm
Cat. No. per unit unit = 1 pc.	Cat. No. per unit unit = 1 pc.	Cat. No. per unit unit = 1 pc.	Cat. No. per unit unit = 1 pc.	Cat. No. per unit unit = 1 pc.	Cat. No. per unit unit = 1 pc.
BPZ-SS-2/320 112349 **BPZ-FS-400/2** 293495	**BPZ-SS-2/320-W** 112351 **BPZ-FS-400/2-W** 293496	**BPZ-KR42/320** 116286 **BPZ-KFS-400** 116293	**BPZ-KR42/400** 193224 **BPZ-KFS-400** 116293	-	-
				-	-
BPZ-SS-2/320 112349 **BPZ-FS-600/2** 293499	**BPZ-SS-2/320-W** 112351 **BPZ-FS-600/2-W** 293500	**BPZ-KR62/320** 116288 **BPZ-KFS-600** 116294	**BPZ-KR62/400** 193225 **BPZ-KFS-600** 116294	-	-
				-	-
BPZ-SS-2/320 112349 **BPZ-FS-800/2** 293503	**BPZ-SS-2/320-W** 112351 **BPZ-FS-800/2-W** 293504	**BPZ-KR82/320** 187911 **BPZ-KFS-800** 187892	**BPZ-KR82/400** 193226 **BPZ-KFS-800** 187892	**PSN-ICD-200/17-BL** EP-502493	-
				PSN-ICD-200/20-BL EP-502494	-
BPZ-SS-2/320 112349 **BPZ-FS-1000/2** 293507	**BPZ-SS-2/320-W** 112351 **BPZ-FS-1000/2-W** 293508	**BPZ-KR102/320** 187891 **BPZ-KFS-1000** 187893	**BPZ-KR102/400** 193227 **BPZ-KFS-1000** 187893	-	**PSN-ICD-400/17-BL** EP-502496
				-	**PSN-ICD-400/20-BL** EP-502497
BPZ-SS-2/320 112349 **BPZ-FS-1200/2** 293511	**BPZ-SS-2/320-W** 112351 **BPZ-FS-1200/2-W** 293512	**BPZ-KR122/320** 116292 **BPZ-KFS-1200** 116296	**BPZ-KR122/400** 193228 **BPZ-KFS-1200** 116296	-	-
				-	-

Description

BPM-F-..., IP55, enclosure depth 320 / 400 mm

- Complete cabinets prepared for ProfiSNAP installation system
- Degree of protection IP55
- Impact resistance IK10
- Protection class I (protective earth)
- Cable entry prepared for F3A flange
- Quick and easy change of the hinge direction, door opening angle ~100°
- Two-way key bit or swing handler
- Additional wall fixing to avoid tilting
- Enclosure made from powder-coated sheet steel, RAL 7035 / RAL 9016
- Add-on connection at depth 400 mm provided
- Variable interior fitting either with "Mounting base frame" or "Mounting side panel" (MSW)

Technical data

	BPM-F-...
Electrical	
Type conforms to	IEC/EN 62208
Protection class	I (protective earth)
Degree of protection	IP55 (closed version with door/flansche) IP2XC (door open, user access level has to be closed properly with front covers)
Impact resistance	IK10
Rated operational voltage	415 VAC / 50 Hz
Rated current	Max. 630 A (depending on the type of incoming circuit breaker or the busbar system being used)
Earthing concept for the enclosure	
Main earthing	By means of M8 welding bolts
Door earthing	By means of M6 welding bolts

The permissible temperature increases for switchgear assemblies with a rated current of up to 630 A can be evaluated in accordance with section 10.10.4.2 of IEC/EN 61439-1.

For the maximum permissible heat dissipation for all devices inside the distribution board at an ambient temperature of 35° C and ΔT of 20 K / 35 K at an enclosure height of 75 %, please refer to the table on enclosure dimensions; (calculation method acc.to IEC/TR 60890).

Mechanical	
Enclosure	Excellent stability thanks to the welded construction
Material	Sheet steel 1.25 mm, phosphated and polyester powder coated (structured) with corrosion protection
Colour	Traffic white, RAL 9016 / Light grey RAL 7035
Door	With encircling foamed sealing, hinges on the inside, door opening angle ~100° Doors with transparent window individually configurable, hinged either left or right width 1000 / 1200 mm in double-wing design
Type	Flexible interior fitting with installation units ProfiSNAP on base frame or „mounting side panel" (MSW) Mounting base frame: multi-layer construction, installation directly in the enclosure, robust and structured Mounting side panel (MSW): removable mounting insert, external installation, fast and reliable
Locking mechanism	Three-point standard locking with two-way key bit (metal) Three-point locking mechanism with swing handler and rod drive (optional lock cylinder as accessory)
Cable entry	Open, prepared for F3A flanges on both sides (top+bottom) Lateral F3A cut-outs (top+bottom) for additional cable entry or cross-wiring at a depth of 400 mm
Busbar system	Prepared for incorporating a continuous busbar system over several sections with depth 400 mm Generous cut-outs left/right (closed with blind plates when delivered)
Ambient condition	Indoor installation (Assembly with/without plinth with additional fixing to a wall, „stand-alone" not recommended) Max. ambient temperature +40° C Min. ambient temperature -5° C
Halogen-free, RoHS	< 1%, yes
Accessories	Several base versions or cable arrangement plinths with height 100 / 200mm, other locking mechanism for door closing, transparent doors, wall fixing brackets
Delivered as	Complete cabinet prepared for „Mounting base frame" or „MSW" (depending on interior fitting all corresponding parts for „Mounting base frame" respectively „MSW" have to be ordered separately)

Dimensions (mm)

BPM-F-..., IP55, enclosure depth 320 / 400 mm

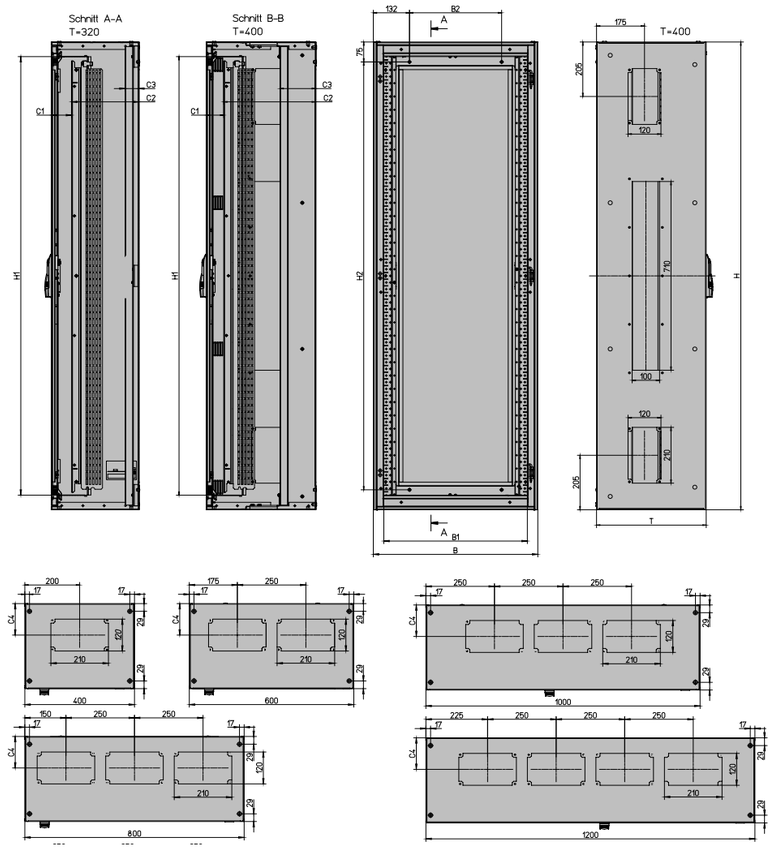

Type	Overall dimensions			Internal dimensions (front plate)		Wall mounting (Enclosure directly)		PSN-MSW		PSN-FPS				Pv [W] (ΔT 20K)	Pv [W] (ΔT 35K)
	Width B	Height H	Depth T	Width B1	Height H1	Width B2	Height H2	C1	C2	C1	C2	C3	C4		
BPM-F-400/17	400	1760	320	320	1650	136	1610	62-92	225-255	112	205	49	118	91	182
BPM-F-400/20	400	2060	320	320	1950	136	1910	62-92	225-255	112	205	49	118	106	213
BPM-F-600/17	600	1760	320	520	1650	336	1610	62-92	225-255	112	205	49	118	132	264
BPM-F-600/20	600	2060	320	520	1950	336	1910	62-92	225-255	112	205	49	118	155	311
BPM-F-800/17	800	1760	320	720	1650	536	1610	62-92	225-255	112	205	49	118	183	367
BPM-F-800/20	800	2060	320	720	1950	536	1910	62-92	225-255	112	205	49	118	195	391
BPM-F-1000/17	1000	1760	320	920	1650	736	1610	62-92	225-255	112	205	49	118	212	425
BPM-F-1000/20	1000	2060	320	920	1950	736	1910	62-92	225-255	112	205	49	118	229	459
BPM-F-1200/17	1200	1760	320	1120	1650	936	1610	62-92	225-255	112	205	49	118	244	489
BPM-F-1200/20	1200	2060	320	1120	1950	936	1910	62-92	225-255	112	205	49	118	269	539
BPM-F-400/17/4-P	400	1760	400	320	1650	136	1610	62-87	310-335	62-112	335-285	130-180	100	114	228
BPM-F-400/20/4-P	400	2060	400	320	1950	136	1910	62-87	310-335	62-112	335-285	130-180	100	128	258
BPM-F-600/17/4-P	600	1760	400	520	1650	336	1610	62-87	310-335	62-112	335-285	130-180	100	158	318
BPM-F-600/20/4-P	600	2060	400	520	1950	336	1910	62-87	310-335	62-112	335-285	130-180	100	183	367
BPM-F-800/17/4-P	800	1760	400	720	1650	536	1610	62-87	310-335	62-112	335-285	130-180	100	203	408
BPM-F-800/20/4-P	800	2060	400	720	1950	536	1910	62-87	310-335	62-112	335-285	130-180	100	217	435
BPM-F-1000/17/4-P	1000	1760	400	920	1650	736	1610	62-87	310-335	62-112	335-285	130-180	100	237	476
BPM-F-1000/20/4-P	1000	2060	400	920	1950	736	1910	62-87	310-335	62-112	335-285	130-180	100	257	515
BPM-F-1200/17/4-P	1200	1760	400	1120	1650	936	1610	62-87	310-335	62-112	335-285	130-180	100	276	554
BPM-F-1200/20/4-P	1200	2060	400	1120	1950	936	1910	62-87	310-335	62-112	335-285	130-180	100	292	585

Possible variants of inside configuration of BP(M)-F

- Installation of inside equipment is identical for both versions BP-F with IP30 and BPM-F with IP55
  1. Installation of mounting plates BPZ-MPL and mounting sets (e.g. BPZ-NZM) directly onto rear frame. Frontplates can be equipped by means of supports PSN-FPS.
  2. Simultaneous installation of mounting plates BPZ-MPL or mounting sets (e.g. BPZ-NZM) and device rails directly onto rear frame. Device rails can be fitted either with towers BPZ-TF/2 (set with rail BPZ-DINR13-...-B) for standard depth or directly onto rear frame for maximum depth. The other depths between these two utmost ones can be reached with towers BPZ-TA/2 (set with rail BPZ-DINR13-...-T). For this tower, the device rail is fitted by means of fastening elements BEL.
  3. Example of mounting of frontplates by means of support PSN-FPS.
  4. Application of mounting side walls PSN-MSW. Device rails are mounted onto PSN-MSW by means of fastening elements BEL. Mounting plates and device rails can be fitted directly onto rear frame, as well. Front plates are fastened onto side walls PSN-MSW for whole board height. Installation of the mounting frame PSN-MSW is the same as for surface mounting board, i.e. by means of corner towers BPZ-CTS-L. Corner towers BPZ-CTS-L are not in scope of delivery of the board itself.
  5. Application of mounting side walls PSN-MSW for partial height of the board. Suitable e.g. for combination of input power section and installation section in a single board. Short side walls PSN-MSW are mounted by means of towers BPZ-CTS-L in the corners and towers BPZ-CTS-S in the middle of the board. The towers are not in a scope of delivery of the board. Frontplates are mounted onto PSN-MSW in the installation section. If the frontplates are asked also for power section, support PSN-FPS with appropriate length is used for their fixing.
  6. Application of mounting side walls PSN-MSW for more sections. Suitable e.g. for easier mounting of heavy equipment, for splitting up into heavy current and weak current section etc. It is necessary to pay attention to correct position of the tower BPZ-CTS-S (the cutout has to be located at the opposite side to PSN-MSW).

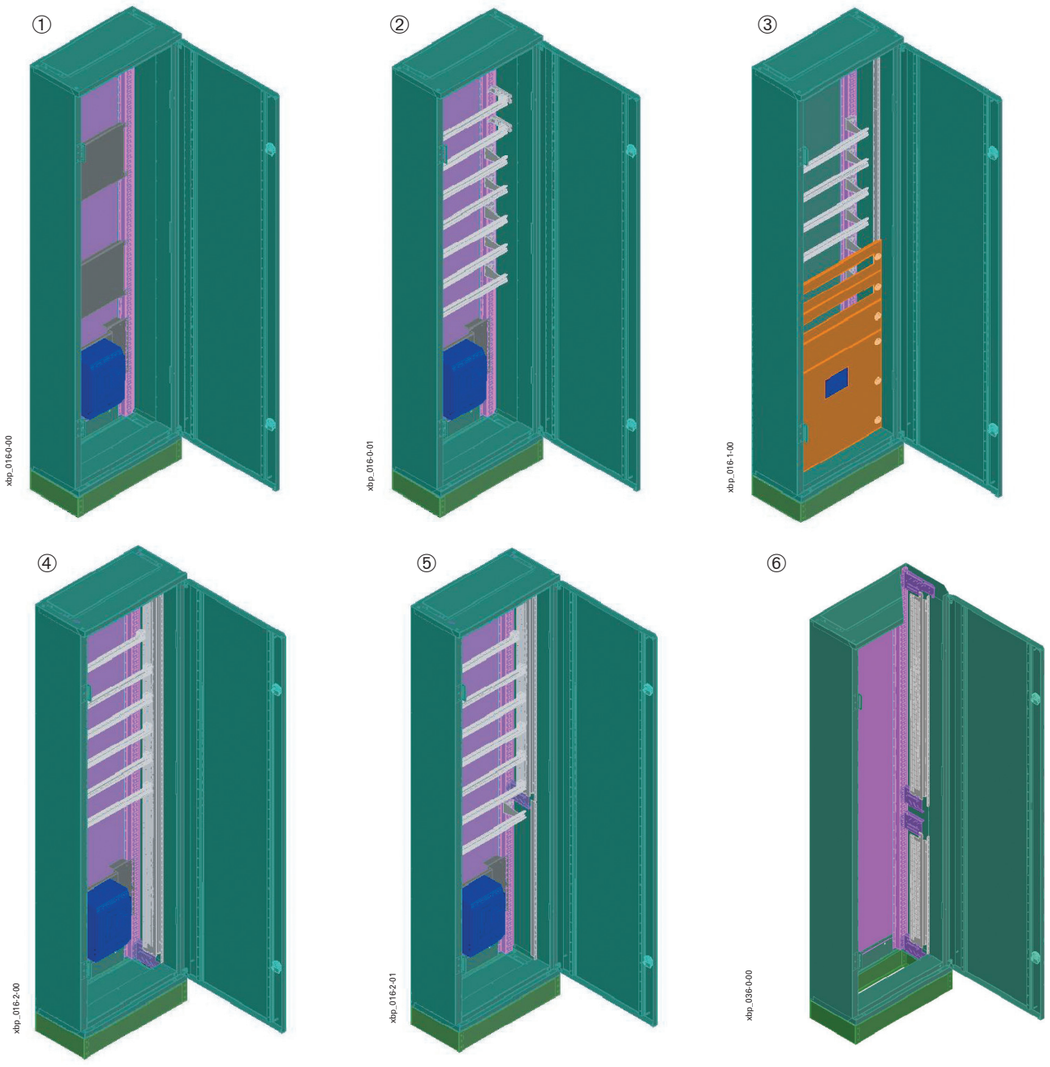

Mounting Inserts, BPZ-MES

- Overview of all available inserts with front plates. Insert fits in Wall-mounting-, Flush-mounting- and Open distribution boards. With MSW application.

Front cover for base, BPZ-FS-..

- Height: 100 mm or 200 mm
- Material: Sheet steel, powder-coated, RAL 7035 and RAL 9016
- Scope of delivery: 1 Front cover, fixing material

Side cover for base, BPZ-SS-..

- Height: 100 mm or 200 mm
- Material: Sheet steel, powder-coated, RAL 7035 and RAL 9016
- Scope of delivery: 2 Side covers, fixing material

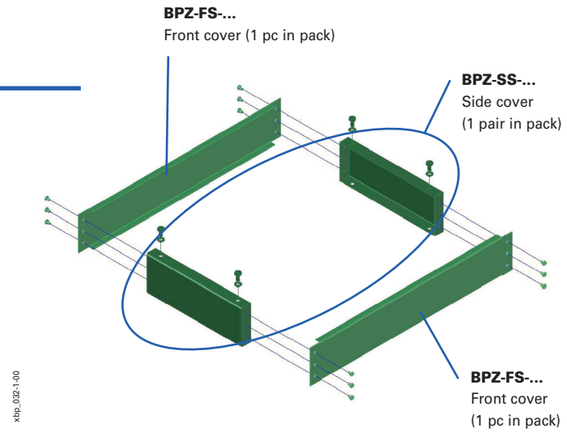

Cable Interconnect Frame, BPZ-KR...

Height: 75, 100 or 200 mm
- Material: Sheet steel, powder-coated, RAL 7035 or RAL 9016 (BPZ-KR.../300-W)
- Scope of delivery: 1 Cable interconnect frame including fixing material without cable strain-relief rail

Dimensions (mm)

Type	W	H	D
BPZ-KR3.5x/...	350	75/100/200	250/400
BPZ-KR4x/...	400	100/200	300/320/400
BPZ-KR6x/...	600	75/100/200	250/300/320/400
BPZ-KR8x/...	800	100/200	300/320/400
BPZ-KR8.5x/...	850	75/100/200	250/400
BPZ-KR10x/...	1000	100/200	300/320/400
BPZ-KR11x/...	1100	75/100/200	250/400
BPZ-KR12x/...	1200	100/200	300/320/400
BPZ-KR13x/...	1350	75/100/200	250/400

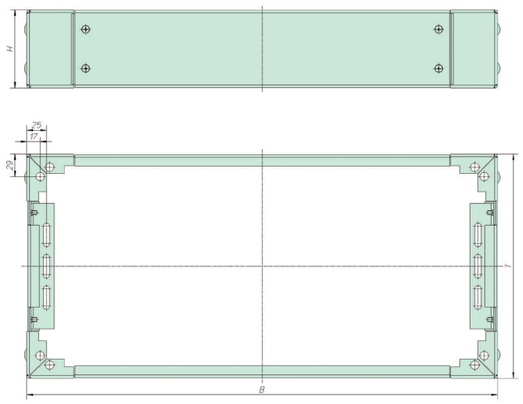

Cable Strain-Relief Rail, BPZ-KFS, BPZ-KFS

- Material: Sheet steel, galvanized
- C-Profile 16 mm, for hammerfoot yoke clamps
- Scope of delivery: 1 Cable strain-relief rail incl. fixing material

Dimensions (mm)

Type	B
BPZ-KFS400	370
BPZ-KFS600	570
BPZ-KFS800	770
BPZ-KFS1000	970
BPZ-KFS1200	1170

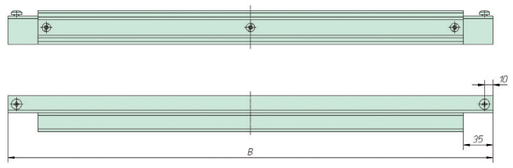

Set for Internal Cable Area available as a Complete Kit, PSN-ICD-..

- Suitable for wall-mounted (height 15) and floor-standing enclosures, each of them can be realised in a width of 800 and 1000 mm
- The cable area can either be mounted on the left or on the right side of the enclosure
- The door is right-hinged and pivoting, removable when necessary
- The metal door makes contact with the enclosure
- The plastic cover serves as an additional protection when the door to the cable area is open
- Material
  Fixing profiles: Sheet steel (2 mm), galvanized
  Setup post: Sheet steel (1.5 mm), galvanized
  Contact surface for front plate: Sheet steel (1.5 mm), galvanized
  Door/frame: Sheet steel (1.5 mm), powder-coated, RAL 7035
  Plastic cover: 2 mm PVC, transparent
- Scope of delivery: 2 Fixing profiles (for top and bottom), 1 setup post, 1 contact surface for front plate, 1 door incl. mounting frame, 1 plastic cover, mounting accessories

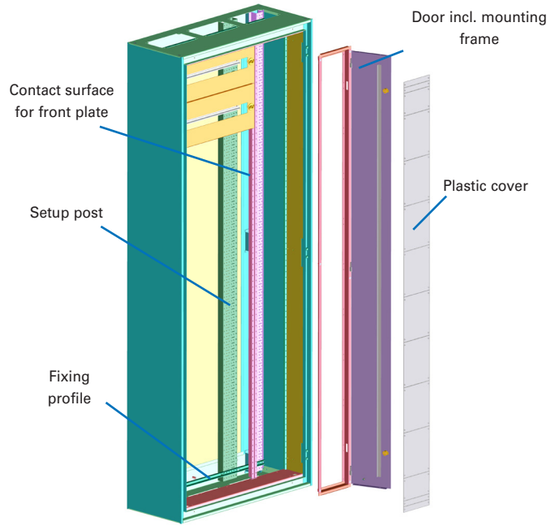

Example of application (floor-standing enclosure IP55 in a width of 800 mm incl. cable area of 200 mm

System Overview

Shared compartment inside xEnergy Basic

The construction of the xEnergy Basic enables a very flexible partition from 1 to max. 3 different sections inside one distribution board! Typically 200 mm compartments are used for separate cable connection room and the 400 mm wide section can be used e.g. for vertical busbar system up to 630 A.
The arrangement and division of the interior is completely arbitrary and is mainly up to the installation behavior from the panel builder / installer.

Example for illustration:

xEnergy Basic type BPM-O-1200/12-P divided into

- 400 mm busbar compartment (with SASY 60i busbar system)
- 600 mm section for installing circuit breakers (MCBs, MCCBs)
- 200 mm cable room for placing outgoing terminals / auxiliary wiring

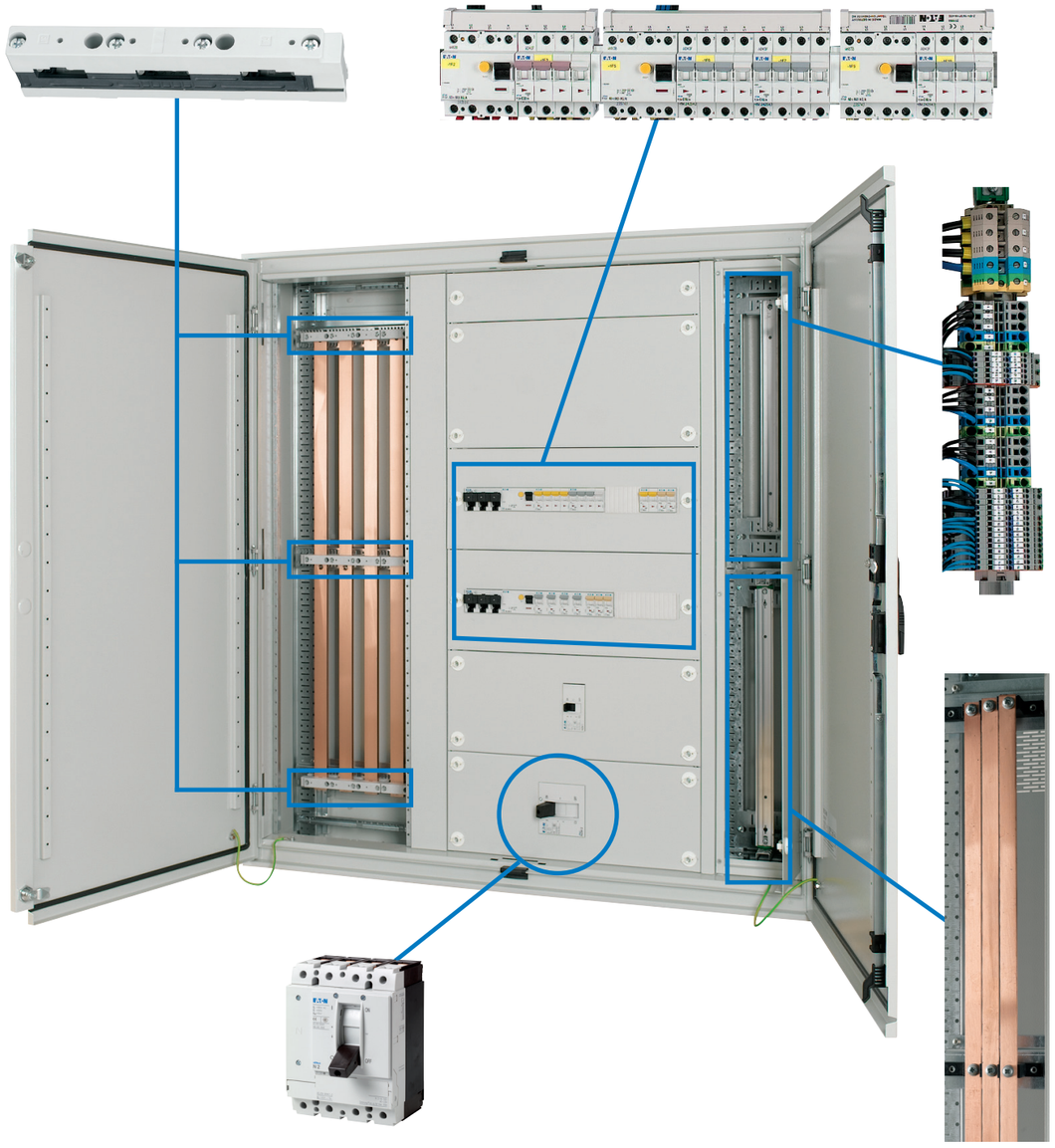

xEnergy Distribution Boards

Shared compartments inside distribution boards BP(M)-O, BP(M)-F

xEnergy Basic
Sheet 1/2

vt07115

W800_400-400

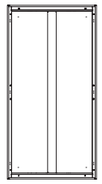

W800_600-200

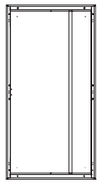

W1000_600-400

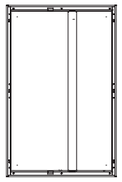

W1000_800-200

W1000_400-400-200

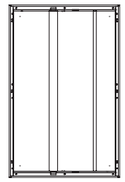

Height [mm]	Height int. [mm]	Compartment arrangement installation back frame consists of separation frame, front plate support and horizontal fixing profile (just needed for BP-O/BPM-O)				
		400/400 mm split-up	600/200 mm split-up*)	600/400 mm split-up*)	800/200 mm split-up*)	400/400/200 mm split-up*)
		RAL 7035 grey	RAL 7035 grey	RAL 7035 grey	RAL 7035 grey	RAL 7035 grey
		Cat. No. per unit unit = 1 pc.	Cat. No. per unit unit = 1 pc.	Cat. No. per unit unit = 1 pc.	Cat. No. per unit unit = 1 pc.	Cat. No. per unit unit = 1 pc.
Basic surface-mounted and floor-standing cabinets (IP30 / IP55)						
460	350	-	**BPZ-SFB-800 + PSN-FPS/350** 173633 + 112343 **BPZ-SF-200/4** 173628	-	-	-
760	650	-	**BPZ-SFB-800 + PSN-FPS/650** 173633 + 112344 **BPZ-SF-200/7** 173629	-	-	-
1060	950	**BPZ-SFB-800 + PSN-FPS/950** 173633 + 112345 **BPZ-SF-10** 173625	**BPZ-SFB-800 + PSN-FPS/950** 173633 + 112345 **BPZ-SF-200/10** 173630	**BPZ-SFB-1000 + PSN-FPS/950** 173634 + 112345 **BPZ-SF-10** 173625	**BPZ-SFB-1000 + PSN-FPS/950** 173634 + 112345 **BPZ-SF-200/10** 173630	**BPZ-SFB-1000 + PSN-FPS/950 (2x)** 173634 + 112345 (2x) **BPZ-SF-10 + BPZ-SF-200/10 **)** 173625 + 173630
1260	1150	**BPZ-SFB-800 + PSN-FPS/1150** 173633 + 112346 **BPZ-SF-12** 173626	**BPZ-SFB-800 + PSN-FPS/1150** 173633 + 112346 **BPZ-SF-200/12** 173631	**BPZ-SFB-1000 + PSN-FPS/1150** 173634 + 112346 **BPZ-SF-12** 173626	**BPZ-SFB-1000 + PSN-FPS/1150** 173634 + 112346 **BPZ-SF-200/12** 173631	**BPZ-SFB-1000 + PSN-FPS/1150 (2x)** 173634 + 112346 (2x) **BPZ-SF-12 + BPZ-SF-200/12 **)** 173626 + 173631
1560	1450	**BPZ-SFB-800 + PSN-FPS/1450** 173633 + 112347 **BPZ-SF-15** 173627	**BPZ-SFB-800 + PSN-FPS/1450** 173633 + 112347 **BPZ-SF-200/15** 173632	**BPZ-SFB-1000 + PSN-FPS/1450** 173634 + 112347 **BPZ-SF-15** 173627	**BPZ-SFB-1000 + PSN-FPS/1450** 173634 + 112347 **BPZ-SF-200/15** 173632	**BPZ-SFB-1000 + PSN-FPS/1450 (2x)** 173634 + 112347 (2x) **BPZ-SF-15 + BPZ-SF-200/15 **)** 173627 + 173632
1760	1650	**BPZ-SFB-800 + PSN-FPS/17** 173633 + 106431 **BPZ-SF-17** 108374	-	**PSN-FPS/17** 106431 **BPZ-SF-17** 108374	-	-
2060	1950	**BPZ-SFB-800 + PSN-FPS/20** 173633 + 106430 **BPZ-SF-20** 108375	-	**PSN-FPS/20** 106430 **BPZ-SF-20** 108375	-	-

*) The line-up can be realized in reverse order as well.
**) This combination can also be realized with the adjacent articles in RAL 9016 (white).

Width [mm]	Dividing plate horizontal / Installation back frame	Width [mm]	Dividing plate horizontal / Installation back frame
	Cat. No. per unit unit = 1 pc.		Cat. No. per unit unit = 1 pc.
Separation Main Frame, BPZ-ASMF			
200	**BPZ-ASMF-200** 188221	800	**BPZ-ASMF-800** 120724
400	**BPZ-ASMF-400** 120722	1000	**BPZ-ASMF-1000** 120725
600	**BPZ-ASMF-600** 120723	1200	**BPZ-ASMF-1200** 120726

xEnergy Distribution Boards

Shared compartments inside distribution boards BP(M)-O, BP(M)-F

5.9

W1200_800-400 W1200_600-600

W1200_400-400-400

W1200_1000-200

W1200_600-400-200

EP-502487_L

vt33614

Compartment arrangement installation back frame consists of separation frame, front plate support and horizontal fixing profile (just needed for BP-O/BPM-O)				Compartment door 200mm / Installation back frame	Dividing plate full height / Installation back frame / Vertical partition
800/400 mm or 600/600 mm split-up*)	400/400/400 mm split-up	1000/200 mm split-up*)	600/400/200 mm split-up*)		Individual plates for different compartment heights see next page!
RAL 7035 grey	RAL 7035 grey	RAL 7035 grey	RAL 7035 grey	RAL 7035 grey	
Cat. No. per unit unit = 1 pc.	Cat. No. per unit unit = 1 pc.	Cat. No. per unit unit = 1 pc.	Cat. No. per unit unit = 1 pc.	Cat. No. per unit unit = 1 pc.	Cat. No. per unit unit = 1 pc.
-	-	-	-	**-**	**BPZ-SF-DP-4** 173636
-	-	-	-	**-**	**BPZ-SF-DP-7** 173637
-	-	-	-	**PSN-CD-200/10-BL** EP-502487	**BPZ-SF-DP-10** 173638
BPZ-SFB-1200 + PSN-FPS/1150 173635 + 112346 **BPZ-SF-12** 173626	**BPZ-SFB-1200 + PSN-FPS/1150 (2x)** 173635 + 112346 (2x) **BPZ-SF-12 (2x)** 173626 (2x)	**BPZ-SFB-1200 + PSN-FPS/1150** 173635 + 112346 **BPZ-SF-200/12** 173631	**BPZ-SFB-1200 + PSN-FPS/1150 (2x)** 173635 + 112346 (2x) **BPZ-SF-12 + BPZ-SF-200/12 **)** 173626 + 173631	**PSN-CD-200/12-BL** EP-502488	**BPZ-SF-DP-12** 173639
BPZ-SFB-1200 + PSN-FPS/1450 173635 + 112347 **BPZ-SF-15** 173627	**BPZ-SFB-1200 + PSN-FPS/1450 (2x)** 173635 + 112347 (2x) **BPZ-SF-15 (2x)** 173627 (2x)	**BPZ-SFB-1200 + PSN-FPS/1450** 173635 + 112347 **BPZ-SF-200/15** 173632	**BPZ-SFB-1200 + PSN-FPS/1450 (2x)** 173635 + 112347 (2x) **BPZ-SF-15 + BPZ-SF-200/15 **)** 173627 + 173632	**PSN-CD-200/15-BL** EP-502489	**BPZ-SF-DP-15** 173640
PSN-FPS/17 106431 **BPZ-SF-17** 108374	**PSN-FPS/17 (2x)** 106431 (2x) **BPZ-SF-17 (2x)** 108374 (2x)	-	-	-	**BPZ-SF-DP-17** 152617
PSN-FPS/20 106430 **BPZ-SF-20** 108375	**PSN-FPS/20 (2x)** 106430 (2x) **BPZ-SF-20 (2x)** 108375 (2x)	-	-	-	**BPZ-SF-DP-20** 152618

Vertical Division in a Surface-Mounted Installation DB as of 800 mm width, IP30 and IP55

- The interior layout can be divided into different sub-divisional widths by using vertical profiles
- Not suitable for a layout including a mounting side-panel (PSN-MSW)
- In addition, there is also a possibility to use partitions between these individual compartments
- Vertical division in a wall-mounted distribution board is possible as of a width of 800 mm, in a floor-standing distribution board of a width of 1000 or 1200 mm only

Fixing Profile for Divided Set-up in a Wall-mounted Distribution Board, BPZ-SFB

- This profile can directly be fixed at the frame and serves as an element for fixing the other setup posts at the rear
- When used in an IP30 enclosure, the bar must be shortened on both ends
- Material: Sheet steel (2 mm), galvanized
- Scope of delivery: 2 Fixing profiles (for top and bottom), fixing accessories

Set for Divided Setup, BPZ-SF

- For setting up the divided sections required in the enclosure
- Set consisting of setup posts (rear-mounted) and cover frame (front-mounted)
- An overview of all layout types possible is provided on the next page
- Material
  Setup posts: Sheet steel (1.5 mm), galvanized
  Front cover: Sheet steel (1 mm), powder-coated, RAL 7035
- Scope of delivery: Depending on the type with either 1 or 2 setup posts, 1 cover frame, fixing accessories

Sheet-Steel Door as a Front Cover for the 200 mm Compartment in a Divided Setup, PSN-CD-200/..

- To protect the 200 mm compartment from unauthorized access
- The door is right-hinged, pivoting and removable when necessary
- Metal door to make contact with the enclosure
- Material: Sheet steel (1.5 mm), powder-coated, RAL 7035
- Scope of delivery: 1 Door incl. mounting frame, fixing accessories

Partition for Divided Setup, BPZ-SF-DP-..

- For vertical partition between 2 sub-sections within one enclosure
- Section-high partition plates for continuous shared compartments, incl. rectangular perforations
- Various partitions from 100 mm up to 800 mm for sealing off prepared compartments / mounting kits, incl. plastic inserts for better accessibility of cable entries etc.
- In combination with horizontal separation main frame BPZ-ASMF it's possible to achieve internal form of separation up to Form 4b
- Mounted on main frame in the back
- Material: Sheet steel (1.5 mm), galvanized
- Scope of delivery: 1 partition plate, mounting accessories

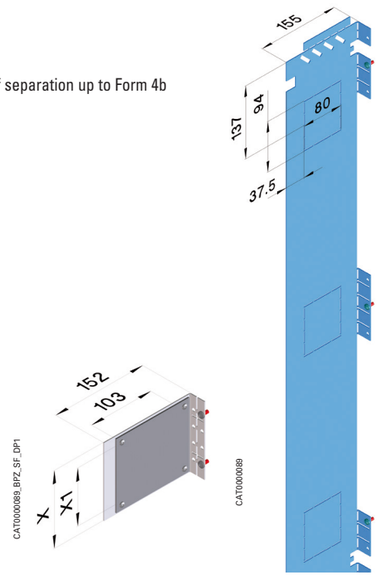

Dimensions (mm)

Type	X	X1	Cutout
BPZ-SF-DP-100	93	63	63x103
BPZ-SF-DP-125	118	88	88x103
BPZ-SF-DP-150	143	113	113x103
BPZ-SF-DP-175	168	138	138x103
BPZ-SF-DP-200	193	163	163x103
BPZ-SF-DP-250	243	213	213x103
BPZ-SF-DP-300	293	263	263x103
BPZ-SF-DP-350	343	313	313x103
BPZ-SF-DP-400	393	363	363x103
BPZ-SF-DP-500	493	463	463x103
BPZ-SF-DP-600	593	563	563x103
BPZ-SF-DP-800	793	763	763x103

Separation Main Frame, BPZ-ASMF

- Mounted on main frame
- For creating a horizontal section within the board
- Mounted horizontal with knock-outs
- Material: Sheet steel (1.25 mm), zinc-coated
- Scope of delivery: 1 Partition, hitch screw

Possible Variants for Vertical Division in a Surface-Mounted Installation Distribution Board IP30 and IP55

Type / Enclosure width [mm]	Compartment Width [mm]					Parts required depending on division of the enclosure		
	1000	800	600	400	200	Fixing profile	BPZ-SF	BPZ-SF-200
Wall-mounted enclosure 800 mm	-	-	-	2x	-	BPZ-SFB-800	1x	-
Wall-mounted enclosure 800 mm	-	-	1x	-	1x	BPZ-SFB-800	-	1x
Wall-mounted enclosure 1000 mm	-	-	-	2x	1x	BPZ-SFB-1000	1x	1x
Wall-mounted enclosure 1000 mm	-	-	1x	1x	-	BPZ-SFB-1000	1x	-
Wall-mounted enclosure 1000 mm	-	1x	-	-	1x	BPZ-SFB-1000	-	1x
Wall-mounted enclosure 1200 mm	-	-	-	3x	-	BPZ-SFB-1200	2x	-
Wall-mounted enclosure 1200 mm	-	-	1x	1x	1x	BPZ-SFB-1200	1x	1x
Wall-mounted enclosure 1200 mm	-	-	2x	-	-	BPZ-SFB-1200	1x	-
Wall-mounted enclosure 1200 mm	-	1x	-	1x	-	BPZ-SFB-1200	1x	-
Wall-mounted enclosure 1200 mm	1x	-	-	-	1x	BPZ-SFB-1200	-	1x
Floor-standing enclosure 1000 mm	-	-	1x	1x	-	-	1x	-
Floor-standing enclosure 1200 mm	-	-	-	3x	-	-	2x	-
Floor-standing enclosure 1200 mm	-	-	2x	-	-	-	1x	-
Floor-standing enclosure 1200 mm	-	1x	-	1x	-	-	1x	-

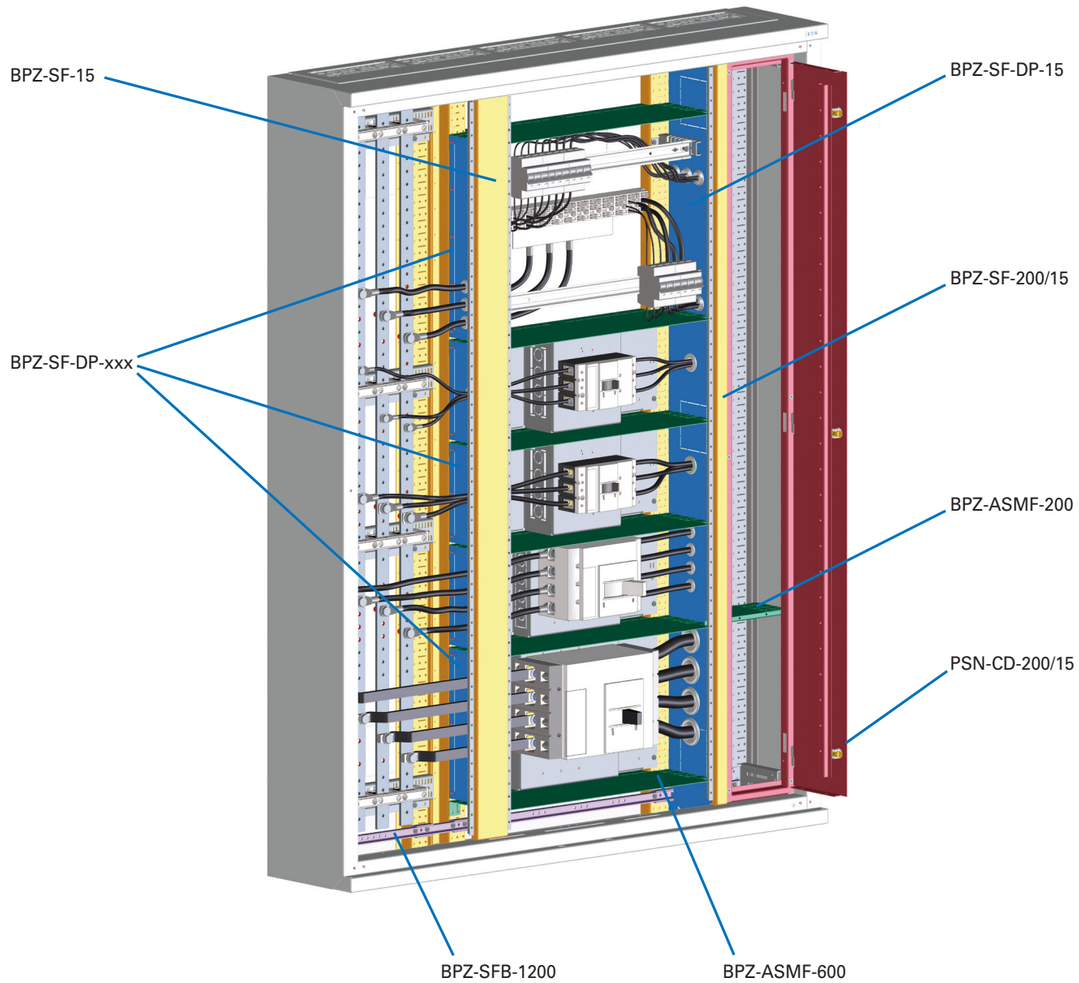

193170_LDO, 293313_LDO, 501316_LDO1

Distribution Boards

Distribution Boards

• Chapter 0
Table of Contents ..... Page 3

• Chapter 1
Field distribution boards protection class II ..... Page 4
1.1 Surface-mounted field distribution board EWK-G.., IP31 ..... Page 5

• Chapter 2
Enclosures / switchgear cabinets for installation system EP in protection class I and II ..... Page 10
2.1 Surface-mounted and floor-standing distribution board EMC2-H.../55-W, IP55 ..... Page 11
2.2 Surface-mounted distribution board BP-0-...-EP-W, IP31 ..... Page 20
2.3 Surface-mounted distribution board BPM-0-...-EP, IP55 ..... Page 26
2.4 Floor-standing distribution board BPM-F-...-EP, IP55 ..... Page 29

• Chapter 3
EP installation system - standard modules / mounting kits ..... Page 34
3.1 EP installation system - standard modules / Fitting-kits, Width 250 mm ..... Page 36
3.2 EP installation system - standard modules / Fitting-kits, Width 500 mm ..... Page 40
3.3 EP installation system - standard modules / Fitting-kits, Width 750 mm ..... Page 44
3.4 EP installation system - standard modules / Fitting-kits, Technical data ..... Page 46

• Chapter 4
EP installation system - general accessories ..... Page 53

• Chapter 5
Enclosures / switchgear cabinets for installation system ProfiSNAP ..... Page 66
5.1 Surface-mounted distribution board BP-0-..., IP30 (pre-assembled) ..... Page 67
5.2 Surface-mounted distribution board BP-0-..., IP30 (flat-pack, grey) ..... Page 72
5.3 Surface-mounted distribution board BP-0-..., IP30 (flat-pack, white) ..... Page 74
5.4 Surface-mounted distribution board BPM-0-..., IP55 ..... Page 95
5.5 Flush-mounted distribution board BP(A/M)-U-3S-..., IP30/IP43/IP54 ..... Page 105
5.6 Floor-standing distribution board BP-F-..., IP30 ..... Page 119
5.7 Outdoor distribution board BP-VF/DZ..., IP44 ..... Page 130
5.8 Floor-standing distribution board BPM-F-..., IP55 ..... Page 137
5.9 Shared compartments inside distribution boards BP(M)-0, BP(M)-F ..... Page 149

• Chapter 6
ProfiSNAP installation system - components for interior fitting ..... Page 154
6.1 Front plates, blind and with 45mm cut-out for DIN-rail devices ..... Page 156
6.2 Mounting kits for Moulded Case Circuit Breaker ..... Page 164
6.3 Mounting kits for Fuse Switch Disconnectors ..... Page 182
6.4 Mounting kits for BZM, Dumeco and QSA ..... Page 188
6.5 Mounting kits for Earthing and Neutral conductors ..... Page 189
6.6 Mounting plates for universal fixing of different components ..... Page 192
6.7 Mounting kits for Energy Meters and various metering equipment ..... Page 200

• Chapter 7
ProfiSNAP installation system - general accessories ..... Page 207

• Chapter 8
General accessories xEnergy Basic ..... Page 228

• Chapter 9
Overall technical data xEnergy Basic ..... Page 248

• Chapter 10
Verification of temperature rise by testing - selection of reference examples ..... Page 253

System Overview

Different ways of assembling the interior fitting

Option 1: using “MSW” for simple wiring in the workshop

Efficient pre-installation in the workshop thanks to our removable mounting insert (PSN-MSW) guarantees smooth connection on-site.

All connection points are fully accessible and easy to check.

Benefits:

- Fast and reliable
- Time-saving solution
- Easy access from 360° view
- No housing around the insert

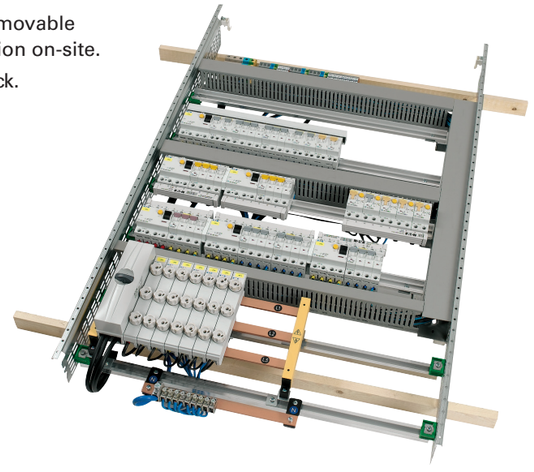

Option 2: using fixed installation material for direct mounting inside the enclosure

Well-considered cabling and connection work directly in the enclosure thanks to different components for a clear and structured “multilayer” assembling.

All interior parts are directly linked to the installation profiles on the back side of the enclosure.

Benefits:

- Robust design
- Multilayer assembling possible
- Internal connection to separate cable room / busbar compartment
- Mounting kits for multiple MCCB installation available

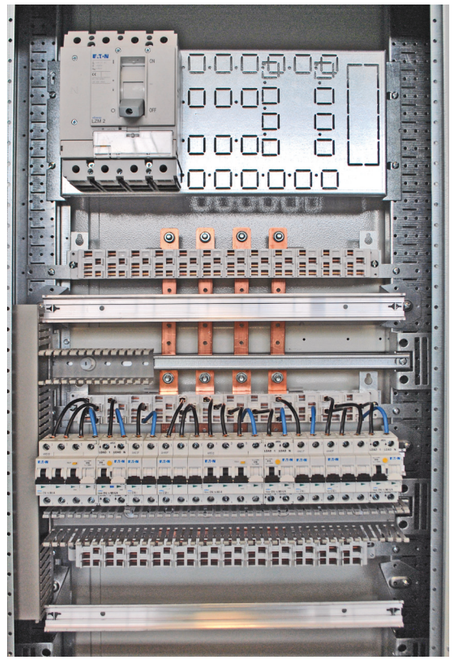

xEnergy Distribution Boards

Front plates, blind and with 45mm cut-out for DIN-rail devices, PSN-FP(P)-…

xEnergy Basic
Sheet 1/6

293313_LDO

EP-502161_L

EP-502178_L

EP-502241_L

EP-502245_L

Width [mm]	Height [mm]	ProfiSNAP Front Plate (blind) Powder-coated steel-sheet Self-earthing and sealable fasteners enable continuous conductivity of the protective earthing concept Tool-less and time-effective installation thanks to patented locking concept	ProfiSNAP Front Plate (blind) Powder-coated steel-sheet frame with plastic insert (PVC) Self-earthing and sealable fasteners enable continuous conductivity of the protective earthing concept Tool-less and time-effective installation thanks to patented locking concept
		Material thickness 1.25 mm RAL 7035 grey	Material thickness 1.25 mm / 2 mm (PVC) RAL 7035 grey
400 (13MU/row)	50	**PSN-FP-400/050-BL** EP-502156	-
	100	**PSN-FP-400/100-BL** EP-502157	-
	125	**PSN-FP-400/125-BL-MSW *)** EP-502158	-
	150	**PSN-FP-400/150-BL** EP-502159	-
	175	**PSN-FP-400/175-BL-MSW *)** EP-502160	-
	200	**PSN-FP-400/200-BL** EP-502161	**PSN-FPP-400/200-BL** EP-502241
	250	**PSN-FP-400/250-BL** EP-502162	-
	300	**PSN-FP-400/300-BL** EP-502163	**PSN-FPP-400/300-BL** EP-502242
	350	**PSN-FP-400/350-BL** EP-502164	-
	400	**PSN-FP-400/400-BL** EP-502165	-
	450	-	-
	500	**PSN-FP-400/500-BL** EP-502166	-
	800	**PSN-FP-400/800-BL** EP-502167	-
600 (24MU/row)	50	**PSN-FP-600/050-BL** EP-502168	-
	100	**PSN-FP-600/100-BL** EP-502169	-
	125	**PSN-FP-600/125-BL-MSW *)** EP-502170	-
	150	**PSN-FP-600/150-BL** EP-502171	-
	175	**PSN-FP-600/175-BL-MSW *)** EP-502172	-
	200	**PSN-FP-600/200-BL** EP-502173	**PSN-FPP-600/200-BL** EP-502243
	250	**PSN-FP-600/250-BL** EP-502174	
	300	**PSN-FP-600/300-BL** EP-502175	**PSN-FPP-600/300-BL** EP-502244
	350	**PSN-FP-600/350-BL** EP-502176	-
	400	**PSN-FP-600/400-BL** EP-502177	-
	450	-	-
	500	**PSN-FP-600/500-BL** EP-502178	**PSN-FPP-600/500-BL** EP-502245
	800	**PSN-FP-600/800-BL** EP-502179	-

*) intended for use with MSW installation

xEnergy Distribution Boards

Front plates, blind and with 45mm cut-out for DIN-rail devices, PSN-FP(P)-…

6.1

VT00405, VT02605

EP-502223_L

EP-502476_L

EP-502477_L

Width [mm]	Height [mm]	ProfiSNAP Front Plate (45 mm cut-out) Powder-coated steel-sheet Self-earthing and sealable fasteners enable continuous conductivity of the protective earthing concept Tool-less and time-effective installation thanks to patented locking concept	ProfiSNAP Front Plate (45 mm cut-out) with split design (vertical) Powder-coated steel-sheet Self-earthing and sealable fasteners enable continuous conductivity of the protective earthing concept Tool-less and time-effective installation thanks to patented locking concept	
			Symmetrical divided	Asymmetrical divided
		Material thickness 1.25 mm RAL 7035 grey	Material thickness 1.25 mm RAL 7035 grey	
400 (13MU/row)	50	-	-	-
	100	-	-	-
	125	**PSN-FP-400/125-45-MSW *)** EP-502216	-	-
	150	**PSN-FP-400/150-45** EP-502217	-	-
	175	**PSN-FP-400/175-45-MSW *)** EP-502218	-	-
	200	**PSN-FP-400/200-45** EP-502219	-	-
	250	-	-	-
	300	**PSN-FP-400/300-45** EP-504732	-	-
	350	-	-	-
	400	-	-	-
	450	**PSN-FP-400/450-45** EP-504737	-	-
	500	-	-	-
	800	-	-	-
600 (24MU/row)	50	-	-	-
	100	-	-	-
	125	**PSN-FP-600/125-45-MSW *)** EP-502220	-	-
	150	**PSN-FP-600/150-45** EP-502221	-	-
	175	**PSN-FP-600/175-45-MSW *)** EP-502222	-	-
	200	**PSN-FP-600/200-45** EP-502223	-	-
	250	-	-	-
	300	**PSN-FP-600/300-45** EP-504733	-	-
	350	-	-	-
	400	-	-	-
	450	**PSN-FP-600/450-45** EP-504738	-	-
	500	-	-	-
	800	-	-	-

xEnergy Distribution Boards

Front plates, blind and with 45mm cut-out for DIN-rail devices, PSN-FP(P)-…

293313_LDO

EP-502161_L

EP-502178_L

EP-502241_L

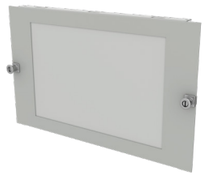

EP-502245_L

Width [mm]	Height [mm]	ProfiSNAP Front Plate (blind) Powder-coated steel-sheet Self-earthing and sealable fasteners enable continuous conductivity of the protective earthing concept Tool-less and time-effective installation thanks to patented locking concept	ProfiSNAP Front Plate (blind) Powder-coated steel-sheet frame with plastic insert (PVC) Self-earthing and sealable fasteners enable continuous conductivity of the protective earthing concept Tool-less and time-effective installation thanks to patented locking concept
		Material thickness 1.25 mm RAL 7035 grey	Material thickness 1.25 mm / 2 mm (PVC) RAL 7035 grey
800 (35MU/row)	50	**PSN-FP-800/050-BL** EP-502180	-
	100	**PSN-FP-800/100-BL** EP-502181	-
	125	**PSN-FP-800/125-BL-MSW *)** EP-502182	-
	150	**PSN-FP-800/150-BL** EP-502183	-
	175	**PSN-FP-800/175-BL-MSW *)** EP-502184	-
	200	**PSN-FP-800/200-BL** EP-502185	**PSN-FPP-800/200-BL** EP-502246
	250	**PSN-FP-800/250-BL** EP-502186	-
	300	**PSN-FP-800/300-BL** EP-502187	**PSN-FPP-800/300-BL** EP-502247
	350	**PSN-FP-800/350-BL** EP-502188	-
	400	**PSN-FP-800/400-BL** EP-502189	-
	450	-	-
	500	**PSN-FP-800/500-BL** EP-502190	**PSN-FPP-800/500-BL** EP-502248
	800	**PSN-FP-800/800-BL** EP-502191	-
1000 (46MU/row)	50	**PSN-FP-1000/050-BL** EP-502192	-
	100	**PSN-FP-1000/100-BL** EP-502193	-
	125	**PSN-FP-1000/125-BL-MSW *)** EP-502194	-
	150	**PSN-FP-1000/150-BL** EP-502195	-
	175	**PSN-FP-1000/175-BL-MSW *)** EP-502196	-
	200	**PSN-FP-1000/200-BL** EP-502197	**PSN-FPP-1000/200-BL** EP-502249
	250	**PSN-FP-1000/250-BL** EP-502198	-
	300	**PSN-FP-1000/300-BL** EP-502199	**PSN-FPP-1000/300-BL** EP-502250
	350	**PSN-FP-1000/350-BL** EP-502200	-
	400	**PSN-FP-1000/400-BL** EP-502201	-
	500	**PSN-FP-1000/500-BL** EP-502202	**PSN-FPP-1000/500-BL** EP-502251
	800	**PSN-FP-1000/800-BL** EP-502203	-

*) intended for use with MSW installation

xEnergy Distribution Boards

Front plates, blind and with 45mm cut-out for DIN-rail devices, PSN-FP(P)-…

6.1

VT00405, VT02605

EP-502223_L

EP-502476_L

EP-502477_L

Width [mm]	Height [mm]	ProfiSNAP Front Plate (45 mm cut-out) Powder-coated steel-sheet Self-earthing and sealable fasteners enable continuous conductivity of the protective earthing concept Tool-less and time-effective installation thanks to patented locking concept	ProfiSNAP Front Plate (45 mm cut-out) with split design (vertical) Powder-coated steel-sheet Self-earthing and sealable fasteners enable continuous conductivity of the protective earthing concept Tool-less and time-effective installation thanks to patented locking concept	
			Symmetrical divided	Asymmetrical divided
		Material thickness 1.25 mm RAL 7035 grey	Material thickness 1.25 mm RAL 7035 grey	
800 (35MU/row)	50	-	-	-
	100	-	-	-
	125	**PSN-FP-800/125-45-MSW *)** EP-502224	-	-
	150	**PSN-FP-800/150-45** EP-502225	**PSN-FP-800/150-45/S31MU** EP-502476	**PSN-FP-800/150-45/A22-9MU** EP-502477
	175	**PSN-FP-800/175-45-MSW *)** EP-502226		-
	200	**PSN-FP-800/200-45** EP-502227		-
	250	-		-
	300	**PSN-FP-800/300-45** EP-504734	-	-
	350	-	-	-
	400	-	-	-
	450	**PSN-FP-800/450-45** EP-504739	-	-
	500	-	-	-
	800	-	-	-
1000 (46MU/row)	50	-	-	-
	100	-	-	-
	125	**PSN-FP-1000/125-45-MSW *)** EP-502228	-	-
	150	**PSN-FP-1000/150-45** EP-502229	**PSN-FP-1000/150-45/S42MU** EP-502478	**PSN-FP-1000/150-45/A29-13MU** EP-502479
	175	**PSN-FP-1000/175-45-MSW *)** EP-502230	-	-
	200	**PSN-FP-1000/200-45** EP-502231	-	-
	250	-	-	-
	300	**PSN-FP-1000/300-45** EP-504735	-	-
	350	-	-	-
	400	-	-	-
	500	-	-	-
	800	-	-	-

xEnergy Distribution Boards

Front plates, blind and with 45mm cut-out for DIN-rail devices, PSN-FP(P)-…

xEnergy Basic Sheet 5/6

293313_LDO

EP-502161_L

EP-502178_L

EP-502241_L

EP-502245_L

Width [mm]	Height [mm]	ProfiSNAP Front Plate (blind) Powder-coated steel-sheet Self-earthing and sealable fasteners enable continuous conductivity of the protective earthing concept Tool-less and time-effective installation thanks to patented locking concept	ProfiSNAP Front Plate (blind) Powder-coated steel-sheet frame with plastic insert (PVC) Self-earthing and sealable fasteners enable continuous conductivity of the protective earthing concept Tool-less and time-effective installation thanks to patented locking concept
		Material thickness 1.25 mm RAL 7035 grey	Material thickness 1.25 mm / 2 mm (PVC) RAL 7035 grey
1200 (57MU/row)	50	**PSN-FP-1200/050-BL** EP-502204	-
	100	**PSN-FP-1200/100-BL** EP-502205	-
	125	**PSN-FP-1200/125-BL-MSW *)** EP-502206	-
	150	**PSN-FP-1200/150-BL** EP-502207	-
	175	**PSN-FP-1200/175-BL-MSW *)** EP-502208	-
	200	**PSN-FP-1200/200-BL** EP-502209	**PSN-FPP-1200/200-BL** EP-502252
	250	**PSN-FP-1200/250-BL** EP-502210	-
	300	**PSN-FP-1200/300-BL** EP-502211	**PSN-FPP-1200/300-BL** EP-502253
	350	**PSN-FP-1200/350-BL** EP-502212	-
	400	**PSN-FP-1200/400-BL** EP-502213	-
	500	**PSN-FP-1200/500-BL** EP-502214	**PSN-FPP-1200/500-BL** EP-502254
	800	**PSN-FP-1200/800-BL** EP-502215	-

*) intended for use with MSW installation

xEnergy Distribution Boards

Front plates, blind and with 45mm cut-out for DIN-rail devices, PSN-FP(P)-…

6.1

VT00405, VT02605

EP-502223_L

EP-502476_L

EP-502477_L

Width [mm]	Height [mm]	ProfiSNAP Front Plate (45mm cut-out) Powder-coated steel-sheet Self-earthing and sealable fasteners enable continuous conductivity of the protective earthing concept Tool-less and time-effective installation thanks to patented locking concept	ProfiSNAP Front Plate (45mm cut-out) with split design (vertical) Powder-coated steel-sheet Self-earthing and sealable fasteners enable continuous conductivity of the protective earthing concept Tool-less and time-effective installation thanks to patented locking concept	
			Symmetrical divided	Asymmetrical divided
		Material thickness 1.25 mm RAL 7035 grey	Material thickness 1.25 mm RAL 7035 grey	
1200 (57MU/row)	50	-	-	-
	100	-	-	-
	125	**PSN-FP-1200/125-45-MSW *)** EP-502232	-	-
	150	**PSN-FP-1200/150-45** EP-502233	-	-
	175	**PSN-FP-1200/175-45-MSW *)** EP-502234	-	-
	200	**PSN-FP-1200/200-45** EP-502235	-	-
	250	-	-	-
	300	**PSN-FP-1200/300-45** EP-504736	-	-
	350	-	-	-
	400	-	-	-
	500	-	-	-
	800	-	-	-

Front plates blind, PSN-FP-..-45

- To cover spare areas or to protect areas in use
- Material: sheet steel, powder-coated, RAL 7035 or RAL 9016
- Metal front plates with automatic connection to the enclosure
- Scope of delivery: 1 front plate

Dimensions (mm)

Type	Outside dimensions	
	Width	Height
	A1	B1
PSN-FP-400/..-BL	320	50, 100, 150, 200, 250, 300
PSN-FP-600/..-BL	520	50, 100, 150, 200, 250, 300
PSN-FP-800/..-BL	720	50, 100, 150, 200, 250, 300
PSN-FP-1000/..-BL	920	50, 100, 150, 200, 250, 300
PSN-FP-1200/..-BL	1120	50, 100, 150, 200, 250, 300

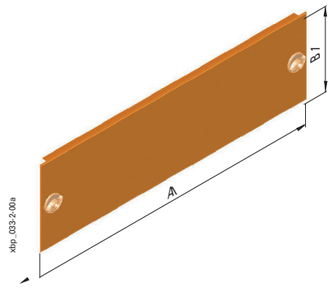

Front plates with 45 mm device cutout, PSN-FP-..-45

- To cover areas accommodating switchgear
- Material: sheet steel, powder-coated, RAL 7035 or RAL 9016
- Metal front plates with automatic connection to the enclosure
- Scope of delivery: 1 front plate

Dimensions (mm)

Type	Outside dimensions		Inside dimensions		
	Width	Height	Width	Height	
	A1	B1	A2	B2	TE
PSN-FP-400/..-45	320	150, 200	238	46	13
PSN-FP-600/..-45	520	150, 200	438	46	24
PSN-FP-800/..-45	720	150, 200	638	46	35
PSN-FP-1000/..-45	920	150, 200	838	46	46
PSN-FP-1200/..-45	1120	150, 200	1038	46	57

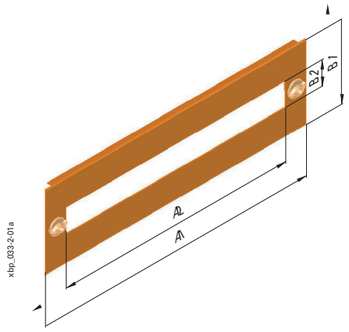

Front plates sheet steel with plastic insert, PSN-FPP-...-BL

- Material: sheet steel, powder-coated, RAL 7035 or RAL 9016
- Metal front plates with automatic connection to the enclosure
- Material of plastic insert: 2 mm PVC, similar to RAL 7035
- Scope of delivery: 1 front plate

Dimensions (mm)

Type	Outside dimensions		Inside dimensions	
	Width	Height	Width	Height
	A1	B1	A2	B2
PSN-FPP-400/200-BL	320	200	230	154
BPZ-FPP-400/300-BL	320	300	230	254
BPZ-FPP-600/200-BL	520	200	430	154
BPZ-FPP-600/300-BL	520	300	430	254
BPZ-FPP-600/500-BL	520	500	430	454
PSN-FPP-800/200-BL	720	200	630	154
BPZ-FPP-800/300-BL	720	300	630	254
BPZ-FPP-800/500-BL	720	500	630	454
PSN-FPP-1000/200-BL	920	200	830	154
BPZ-FPP-1000/300-BL	920	300	830	254
BPZ-FPP-1000/500-BL	920	500	830	454
PSN-FPP-1200/200-BL	1120	200	1030	154
BPZ-FPP-1200/300-BL	1120	300	1030	254
BPZ-FPP-1200/500-BL	1120	500	1030	454

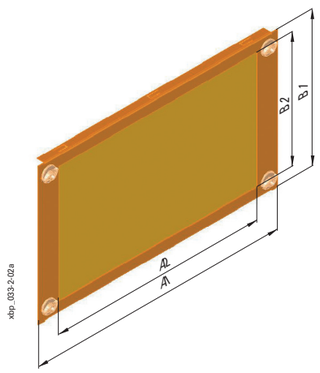

Front plates for command devices RMQ-Titan, BPZ-FP-...-RMQ

- Material: sheet steel, powder-coated, RAL 7035 or RAL 9016
- Metal front plates with automatic connection to the enclosure
- Scope of delivery: 1 front plate

Dimensions (mm)

Type	Outside dimensions		Amount of supports for RMQ
	Width	Height	
	A1	B1	
BPZ-FP-400/100-RMQ	320	100	7
BPZ-FP-600/100-RMQ	520	100	12

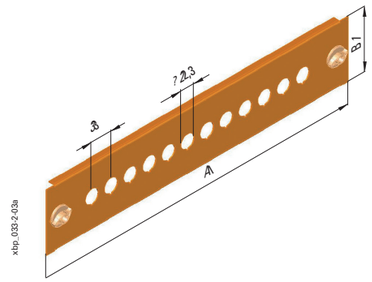

Examples of application of front plates

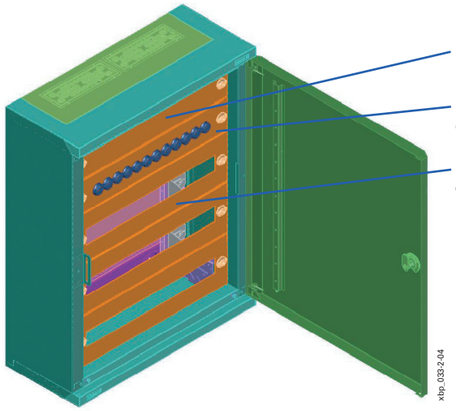

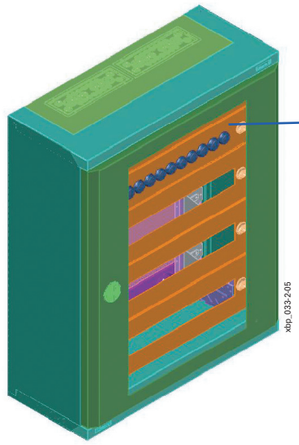

xEnergy Distribution Boards

Mounting kits for Moulded Case Circuit Breaker

xEnergy Basic
Sheet 1/2

	vt11419 Symbolphoto	VT112514_L + EP-502357_L	EP-502299_L	EP-502301_L	EP-502300_L
			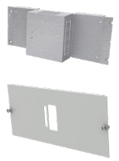	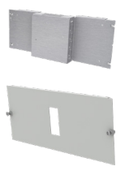	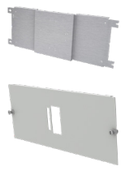
Width [mm]	Installation back frame				Mounting side wall (MSW)
	NZM1 single				NZM1 single
	Toggle operation		Rotary door handle / direct swing handle		Toggle operation
	Rear connection	Side connection	Side connection		Side connection
	RAL 7035 grey		RAL 7035 grey		RAL 7035 grey
Mounting kits for Moulded Case Circuit Breaker, frame size 1, NZM1/LZM1 (horizontal configuration)					
400	-	**PSN-NZM1-400/200-MH** EP-502298	-	-	
600	**BPZ-MPL-NZM1X-600-MX** 174390 **PSN-FP/S-NZM1-600/200-MH** EP-502357	**PSN-NZM1-600/200-MH** EP-502299	**PSN-NZM1-600/200-MH-XDV** EP-502301	**PSN-NZM1-600/200-MH-MSW** EP-502300	
800	**BPZ-MPL-NZM1X-800-MX** 174399 **PSN-FP/S-NZM1-800/200-MH** EP-502358	**PSN-NZM1-800/200-MH** EP-502302	**PSN-NZM1-800/200-MH-XDV** EP-502304	**PSN-NZM1-800/200-MH-MSW** EP-502303	
1000	-	-	-	-	
1200	-	-	-	-	

xEnergy Basic
Sheet 2/2

xEnergy Distribution Boards

Mounting kits for Moulded Case Circuit Breaker

	VT112514_L + EP-502327_L	EP-502292_L	EP-502294_L	EP-502293_L	VT00905_L + EP-502327_L
		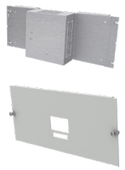	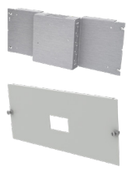	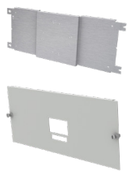	
	Installation back frame			Mounting side wall (MSW)	Installation back frame
	NZM1 single (+XFI module) or NZM1 multiple	NZM1 single		NZM1 single	NZM1 multiple
	Toggle operation		Rotary door handle / direct swing handle	Toggle operation	Toggle operation
	Rear connection	Top/bottom connection	Top/bottom connection	Top/bottom connection	Top/bottom connection
	RAL 7035 grey		RAL 7035 grey	RAL 7035 grey	RAL 7035 grey
Mounting kits for Moulded Case Circuit Breaker, frame size 1, NZM1/LZM1 (horizontal configuration)					
400	-	**PSN-NZM1-400/200-MV** EP-502289	**PSN-NZM1-400/200-MV-XDV** EP-502291	**PSN-NZM1-400/200-MV-MSW** EP-502290	**BPZ-MPL-NZM1X-400-MV** 120742 **PSN-FP-NZM1X-2/2-400/200-MV** EP-502326 (up to 2x NZM1-3p / 2x NZM1-4p)
600	**BPZ-MPL-NZM1X-600-MX** 174390 **PSN-FP/S-NZM1X-3/3-600/200-MV** EP-502327 (up to 3x NZM1-4p)	**PSN-NZM1-600/200-MV** EP-502292	**PSN-NZM1-600/200-MV-XDV** EP-502294	**PSN-NZM1-600/200-MV-MSW** EP-502293	**BPZ-MPL-NZM1X-600-MV** 120743 **PSN-FP/S-NZM1X-3/3-600/200-MV** EP-502327 (up to 3x NZM1-3p / 3x NZM1-4p)
800	**BPZ-MPL-NZM1X-800-MX** 174399 **PSN-FP/S-NZM1X-4/4-800/200-MV** EP-502328 (up to 4x NZM1-4p)	**PSN-NZM1-800/200-MV** EP-502295	**PSN-NZM1-800/200-MV-XDV** EP-502297	**PSN-NZM1-800/200-MV-MSW** EP-502296	**BPZ-MPL-NZM1X-800-MV** 120744 **PSN-FP/S-NZM1X-4/4-800/200-MV** EP-502328 (up to 4x NZM1-3p / 4x NZM1-4p)
1000	-	-	-	-	**BPZ-MPL-NZM1X-1000-MV** 173619 **PSN-FP/S-NZM1X-5/5-1000/200-MV** EP-502329 (up to 5x NZM1-3p / 5x NZM1-4p)
1200	-	-	-	-	**BPZ-MPL-NZM1X-1200-MV** 173620 **PSN-FP/S-NZM1X-6/6-1200/200-MV** EP-502330 (up to 6x NZM1-3p / 6x NZM1-4p)

	VT108214_L + EP-502360_L	VT108214_L + EP-502359_L	EP-502315_L	EP-502317_L	EP-502316_L
	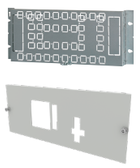	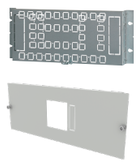	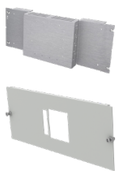		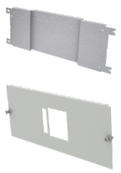
Width	Installation back frame				Mounting side wall (MSW)
[mm]	NZM2 + XFI module	NZM2 single			NZM2 single
	Toggle operation			Rotary door handle / direct rotary handle	Toggle operation
	Rear connection		Side connection		Side connection
	RAL 7035 grey			RAL 7035 grey	RAL 7035 grey
Mounting kits for Moulded Case Circuit Breaker, frame size 2, NZM2/LZM2 (horizontal configuration)					
400	-	-	**PSN-NZM2-400/200-MH** EP-502314	-	-
600	**BPZ-MPL-NZM2X-600-MX** 174391 **PSN-FP/S-NZM2-600/200-MH-XFI** EP-502360	**BPZ-MPL-NZM2X-600-MX** 174391 **PSN-FP/S-NZM2-600/200-MH** EP-502359	**PSN-NZM2-600/200-MH** EP-502315	**PSN-NZM2-600/200-MH-XDV** EP-502317	**PSN-NZM2-600/200-MH-MSW** EP-502316
800	**BPZ-MPL-NZM2X-800-MX** 174400 **PSN-FP/S-NZM2-800/200-MH-XFI** EP-502362	**BPZ-MPL-NZM2X-800-MX** 174400 **PSN-FP/S-NZM2-800/200-MH** EP-502361	**PSN-NZM2-800/200-MH** EP-502318	**PSN-NZM2-800/200-MH-XDV** EP-502320	**PSN-NZM2-800/200-MH-MSW** EP-502319
1000			-	-	-
1200			-	-	-

	VT108214_L + EP-502344_L	EP-502308_L	EP-502310_L	EP-502309_L	VT108214_L + EP-502346_L	
	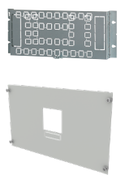	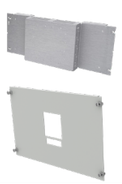	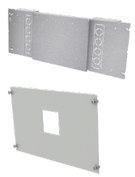		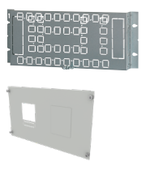	
Installation back frame				Mounting side wall (MSW)	Mounting side wall (MSW)	
NZM2 single [NZM2 single + XFI module]	NZM2 single			NZM2 single	NZM2 multiple	
Toggle operation			Rotary door handle / direct swing handle	Toggle operation	Toggle operation	
Rear connection	Top/bottom connection			Top/bottom connection	Top/bottom connection	Rear connection
RAL 7035 grey			RAL 7035 grey	RAL 7035 grey	RAL 7035 grey	
Mounting kits for Moulded Case Circuit Breaker, frame size 1, NZM1/LZM1 (horizontal configuration)						
PSN-FP/S-NZM2-400/400-MV-XFI EP-502343	**PSN-NZM2-400/300-MV** EP-502305	**PSN-NZM2-400/300-MV-XDV** EP-502307	**PSN-NZM2-400/300-MV-MSW** EP-502306	**BPZ-MPL-NZM2X-400-MV** 120745 **PSN-FP-NZM2X-2/0-400/300-MV** EP-502331 (up to 2x NZM2-3p)	-	
BPZ-MPL-NZM2X-600-MX 174391 **PSN-FP/S-NZM2-600/300-MV** EP-502344 **[PSN-FP/S-NZM2-600/400-MV-XFI]** [EP-502345]	**PSN-NZM2-600/300-MV** EP-502308	**PSN-NZM2-600/300-MV-XDV** EP-502310	**PSN-NZM2-600/300-MV-MSW** EP-502309	**BPZ-MPL-NZM2X-600-MV** 120746 **PSN-FP-NZM2X-3/2-600/300-MV** EP-502332 (up to 3x NZM2-3p / 2x NZM2-4p)	**BPZ-MPL-NZM2X-600-MX** 174391 **PSN-FP/S-NZM2X-2/2-600/300-MV** EP-502346 (up to 2x NZM2-3p / 2x NZM2-4p)	
BPZ-MPL-NZM2X-800-MX 174400 **PSN-FP/S-NZM2-800/300-MV** EP-502347 **[PSN-FP/S-NZM2-800/400-MV-XFI]** [EP-502348]	**PSN-NZM2-800/300-MV** EP-502311	**PSN-NZM2-800/300-MV-XDV** EP-502313	**PSN-NZM2-800/300-MV-MSW** EP-502312	**BPZ-MPL-NZM2X-800-MV** 120747 **PSN-FP-NZM2X-4/4-800/300-MV** EP-502333 (up to 4x NZM2-3p / 4x NZM2-4p)	**BPZ-MPL-NZM2X-800-MX** 174400 **PSN-FP/S-NZM2X-3/3-800/300-MV** EP-502349 (up to 3x NZM2-3p / 3x NZM2-4p)	
-	-	-	-	**BPZ-MPL-NZM2X-1000-MV** 173621 **PSN-FP-NZM2X-4/4-1000/300-MV** EP-502334 (up to 4x NZM2-3p / 4x NZM2-4p)	-	
-	-	-	-	**BPZ-MPL-NZM2X-1200-MV** 173622 **PSN-FP-NZM2X-4/4-1200/300-MV** EP-502335 (up to 4x NZM2-3p / 4x NZM2-4p)	-	

	vt11419 Symbolphoto	VT108114_L + EP-502363_L	EP-502324_L
		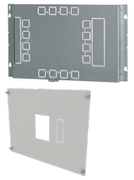	
Width [mm]		Installation back frame	
		NZM3 single	
		Toggle operation	
		Rear connection	Side connection
		RAL 7035 grey	
Mounting kits for Moulded Case Circuit Breaker, frame size 3, NZM3/LZM3 (horizontal configuration)			
400		-	-
600		**BPZ-MPL-NZM3-600-MX** 174395 **PSN-FP/S-NZM3-600/400-MH** EP-502363	**PSN-NZM3-600/300-MH** EP-502324
800		**BPZ-MPL-NZM3-800-MX** 174404 **PSN-FP/S-NZM3-800/400-MH** EP-502364	**PSN-NZM3-800/300-MH** EP-502325
1000		-	-
1200		-	-

	VT108214_L + EP-502350_L	EP-502322_L	VT00905_L + EP-502336_L	VT00905_L + EP-502245_L
	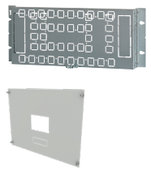	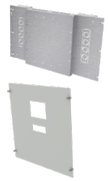	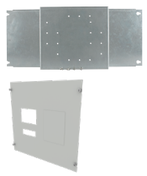	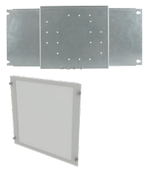
	Installation back frame		Installation back frame	
	NZM3 single		NZM3 multiple	combination of different frame sizes NZM3 + NZM2/NZM1 (no cut-outs prepared)
	Toggle operation		Toggle operation	
	Rear connection	Top/bottom connection	Top/bottom connection	
	RAL 7035 grey		RAL 7035 grey	
Mounting kits for Moulded Case Circuit Breaker, frame size 3, NZM3/LZM3 (horizontal configuration)				
400	-	**PSN-NZM3-400/500-MV** EP-502321	-	-
600	**BPZ-MPL-NZM3-600-MX** 174395 **PSN-FP/S-NZM3-600/400-MV** EP-502350	**PSN-NZM3-600/500-MV** EP-502322	**BPZ-MPL-NZM3X-600-MV** 120748 **PSN-FP-NZM3X-2/2-600/500-MV** EP-502336 (up to 2x NZM3-3p / 2x NZM3-4p)	**BPZ-MPL-NZM3X-600-MV** 120748 **PSN-FPP-600/500-BL** EP-502245
800	**BPZ-MPL-NZM3-800-MX** 174404 **PSN-FP/S-NZM3-800/400-MV** EP-502351	**PSN-NZM3-800/500-MV** EP-502323	**BPZ-MPL-NZM3X-800-MV** 120749 **PSN-FP-NZM3X-3/3-800/500-MV** EP-502337 (up to 3x NZM3-3p / 3x NZM3-4p)	**BPZ-MPL-NZM3X-800-MV** 120749 **PSN-FPP-800/500-BL** EP-502248
1000	-	-	**BPZ-MPL-NZM3X-1000-MV** 173623 **PSN-FP-NZM3X-3/3-1000/500-MV** EP-502338 (up to 3x NZM3-3p / 3x NZM3-4p)	**BPZ-MPL-NZM3X-1000-MV** 173623 **PSN-FPP-1000/500-BL** EP-502251
1200	-	-	**BPZ-MPL-NZM3X-1200-MV** 173624 **PSN-FP-NZM3X-3/3-1200/500-MV** EP-502339 (up to 3x NZM3-3p / 3x NZM3-4p)	**BPZ-MPL-NZM3X-1200-MV** 173624 **PSN-FPP-1200/500-BL** EP-502254

Mounting sets PSN-NZM for circuit breakers NZM

- Mounting sets PSN-NZM... for mounting NZM1-3 circuit breakers (position of the breaker vertical or horizontal) for surface-mounted or floor-standing boards
- Material
  Front plate: sheet steel, powder-coated, RAL 7035 or RAL 9016
  Mounting plate: sheet steel (2 mm), zinc-coated
- Metal front plates with automatic connection to the enclosure
- Design ...-XDV for breakers equipped with rotary door handle, suitable only for surface-mounted or floor-standing boards
- Scope of delivery: 1 mounting plate, 1 front plate, fixing material

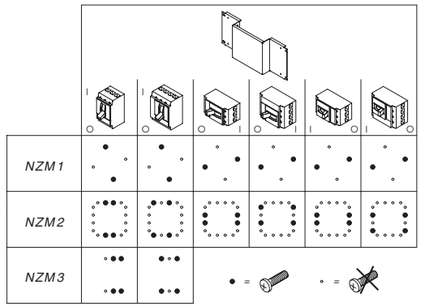

Dimensions (mm)

Type	Front plate Outside dimensions		Mounting plate Outside dimensions				
	Width	Height	Width	Height			
	A3	B2	A1	B1	A2	A4	C
PSN-NZM1-400/200-MV	320	299	292	179	174	61	89.5
PSN-NZM2-400/300-MV	320	399	292	179	230	33	54.5
PSN-NZM3-400/500-MV	320	499	292	279	244	26	37
PSN-NZM1-600/200-MV	520	299	492	179	174	161	89.5
PSN-NZM2-600/300-MV	520	399	492	179	230	133	54.5
PSN-NZM3-600/500-MV	520	499	492	279	244	126	37
PSN-NZM1-800/200-MV	720	299	692	179	174	261	89.5
PSN-NZM2-800/300-MV-XDV	720	399	692	179	230	233	54.5
PSN-NZM3-800/500-MV	720	499	692	279	244	226	37
PSN-NZM1-400/200-MH	320	199	292	179	74	61	89.5
PSN-NZM2-400/200-MH	320	199	292	179	230	33	54.5
PSN-NZM1-600/200-MH	520	199	492	179	174	161	89.5
PSN-NZM2-600/200-MH	520	199	492	179	230	133	54.5
PSN-NZM1-800/200-MH	720	199	692	179	174	261	89.5
PSN-NZM2-800/200-MH	720	199	692	179	230	233	54.5
PSN-NZM2-400/300-MV-MSW	320	299	288	185	174	57	16.5
PSN-NZM2-400/300-MV-MSW	320	399	288	185	226	31	-18.5
PSN-NZM1-600/200-MV-MSW	520	299	488	185	174	157	16.5
PSN-NZM2-600/300-MV-MSW	520	399	488	185	226	131	-18.5
PSN-NZM1-800/200-MV-MSW	720	299	688	185	174	257	16.5
PSN-NZM2-800/300-MV-MSW	720	399	688	185	226	231	-18.5
PSN-NZM1-600/200-MH-MSW	520	199	488	185	174	157	16.5
PSN-NZM2-600/200-MH-MSW	520	199	488	185	226	131	-18.5
PSN-NZM1-800/200-MH-MSW	720	199	688	185	174	257	16.5
PSN-NZM2-800/200-MH-MSW	720	199	688	185	226	231	-18.5
PSN-NZM1-400/200-MV-XDV	320	299	292	179	174	61	54.5
PSN-NZM2-400/300-MV-XDV	320	399	292	179	230	33	19.5
BPZ-NZM3-400-MV-RH	320	499	292	279	244	26	0
PSN-NZM1-600/200-MV-XDV	520	299	492	179	174	161	54.5
PSN-NZM2-600/300-MV-XDV	520	399	492	179	230	133	19.5
PSN-NZM1-800/200-MV-XDV	720	299	692	179	174	261	54.5
PSN-NZM2-800/300-MV-XDV	720	399	692	179	230	233	19.5
PSN-NZM1-600/200-MH-XDV	520	199	492	179	174	161	54.5
PSN-NZM2-600/200-MH-XDV	520	199	492	179	230	133	19.5
PSN-NZM1-800/200-MH-XDV	720	199	692	179	174	261	54.5
PSN-NZM2-800/200-MH-XDV	720	199	692	179	230	233	19.5

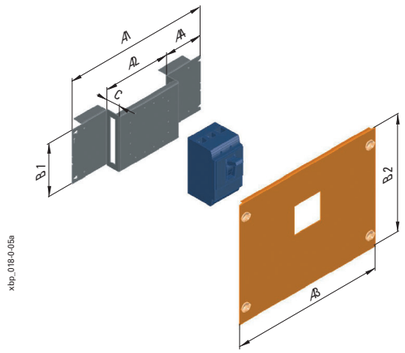

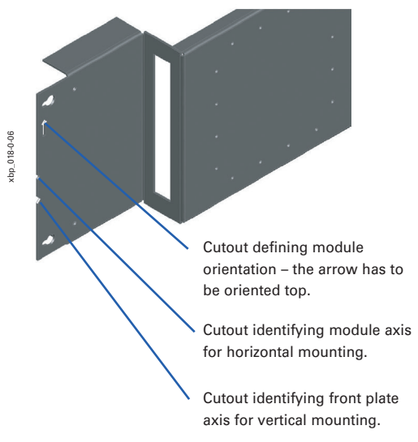

Round cutout:
- identifies axis of the device module
- Identifi es front plate axis for horizontal mounting

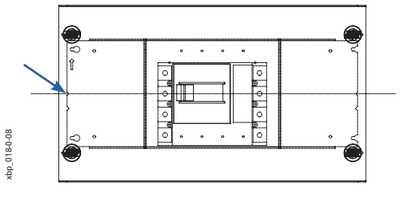

Sharp cutout:
- identifies front plate axis for vertical mounting (position of the mounting plate is defi ned by the axis of the front plate)

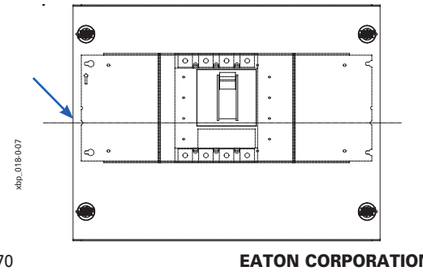

Applications of mounting sets PSN-NZM...-XDV

- Example of utilisation in a surface-mounted board (can be used for floor-standing boards as well)

Mounting process

1. Fixing of a breaker onto mounting plate from the set
2. Installation of the mounting plate with the breaker into board
3. Fixing of the front plate
4. Mounting of the door coupling and swing handle

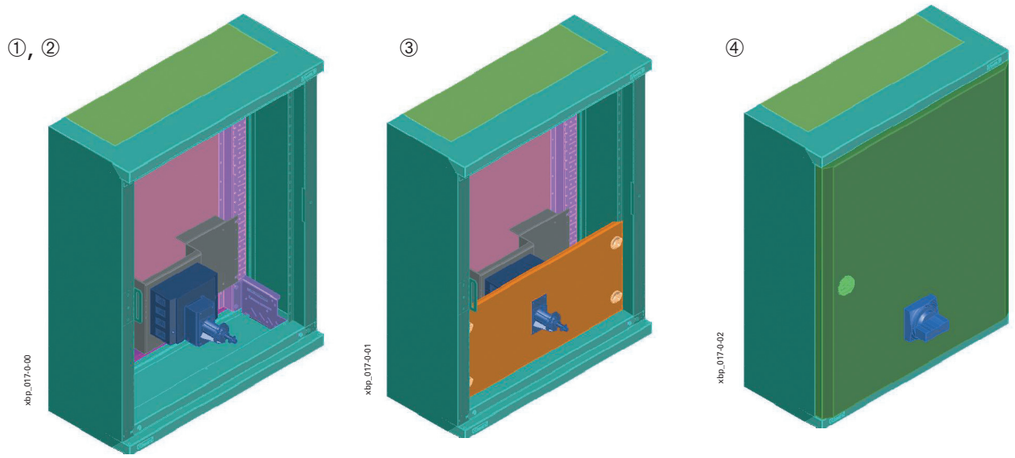

Applications of mounting sets PSN-NZM...-MSW

- For NZM breakers of type size 1 and 2
- Vertical or horizontal orientation of the breaker
- Mounting on to side walls PSN-MSW by means of fastening elements BEL

Mounting process:

1. Fixing of a breaker onto mounting plate from the set
2. Installation of the mounting plate with the breaker into board by means of fastening elements BEL
3. Fixing of the front plate

NZM1 breaker, horizontal orientation

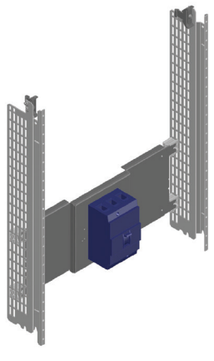
xbp_014-4-01

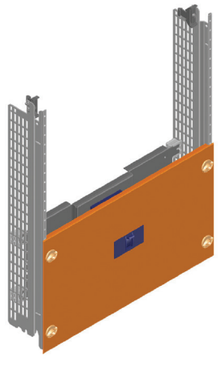
xbp_014-4-00

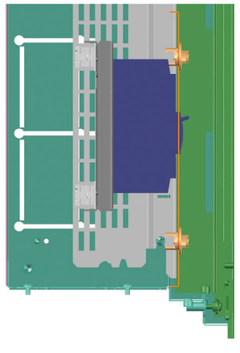
xbp_014-4-02a

NZM2 breaker, vertical orientation

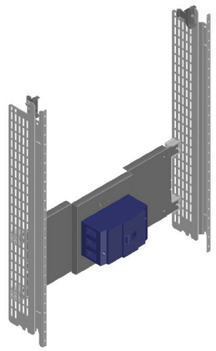
xbp_014-4-04

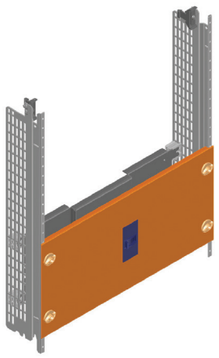
xbp_014-4-03

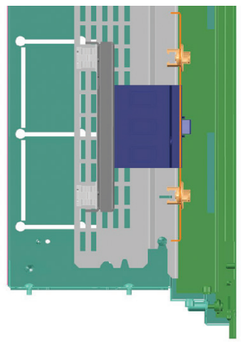
xbp_014-4-05

NZM2 breaker, vertical orientation

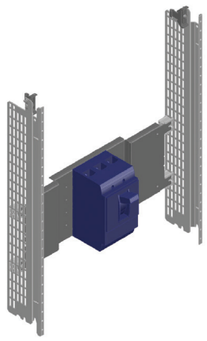
xbp_014-5-01

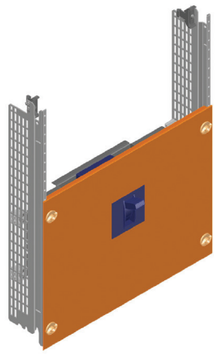
xbp_014-5-00

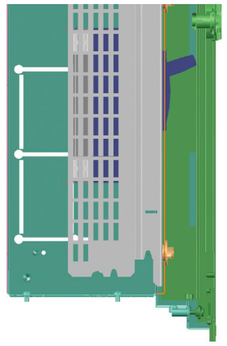
xbp_014-5-02a

Applications of mounting sets PSN-NZM...-MSW

NZM1 breaker, horizontal orientation

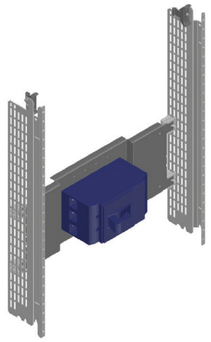
xbp_014-5-04

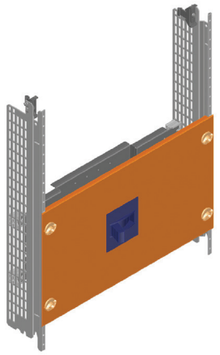
xbp_014-5-03

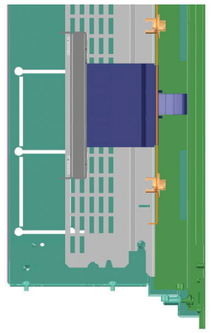
xbp_014-5-05

Mounting Plate for Several Devices such as NZM, BPZ-MPL-NZM..-…-MV

- For mounting one or several NZM devices in a vertical position
- Suitable for wall-mounted and floor-standing enclosures with ProfiSNAP mounting frame
- Material: Sheet steel (2 mm), galvanized
- Scope of delivery: 1 Mounting plate, mounting accessories

Dimensions (mm)

Type	Max. number of 3-/4-pole NZMs *)	A1	A2	B1
BPZ-MPL-NZM1X-400-MV	2x NZM1 / 2x NZM1	292	232	160
BPZ-MPL-NZM1X-600-MV	4x NZM1 / 3x NZM1	492	432	160
BPZ-MPL-NZM1X-800-MV	7x NZM1 / 5x NZM1	692	632	160
BPZ-MPL-NZM1X-1000-MV	9x NZM1 / 6x NZM1	892	832	160
BPZ-MPL-NZM1X-1200-MV	11x NZM1 / 8x NZM1	1092	1032	160
BPZ-MPL-NZM2X-400-MV	2x NZM2 / -	292	232	185
BPZ-MPL-NZM2X-600-MV	3x NZM2 / 2x NZM2	492	432	185
BPZ-MPL-NZM2X-800-MV	4x NZM2 / 4x NZM2	692	632	185
BPZ-MPL-NZM2X-1000-MV	4x NZM2 / 4x NZM2	892	832	185
BPZ-MPL-NZM2X-1200-MV	4x NZM2 / 4x NZM2	1092	1032	185
BPZ-MPL-NZM3X-600-MV	2x NZM3 / 2x NZM3	492	432	285
BPZ-MPL-NZM3X-800-MV	3x NZM3 / 3x NZM3	692	632	285
BPZ-MPL-NZM3X-1000-MV	3x NZM3 / 3x NZM3	892	832	285
BPZ-MPL-NZM3X-1200-MV	3x NZM3 / 3x NZM3	1092	1032	285

*) Max. number depending on availability of suitable front plates

Placing of the mounting holes for particular type sizes of the circuit breakers (BPZ-MPL-NZM3X-...)

- In case that circuit breakers of different type sizes are mounted onto a single mounting plate it is necessary to put spacers NZM1/2-XAB under the smallersize breaker. The matching front plate with plastic insert BPZ-FPP have to be prepared individual (no cuttings existing).

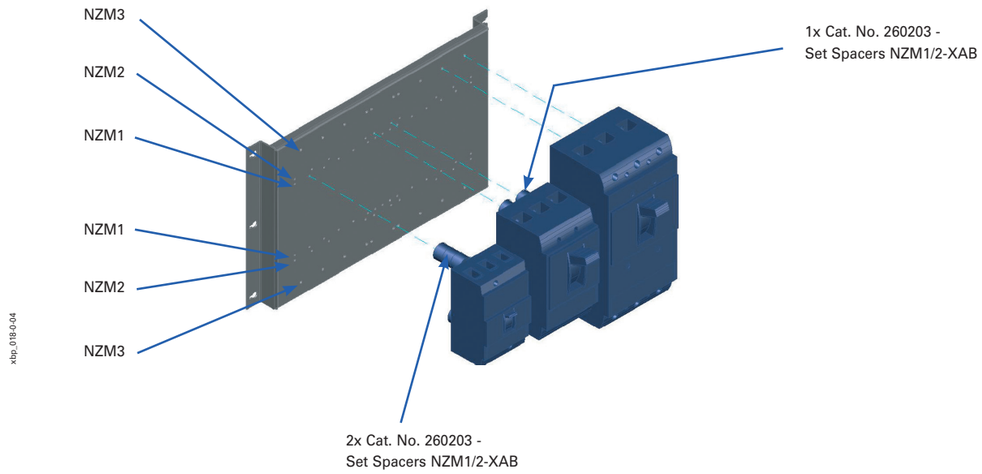

Basic dimensions of the circuit breakers NZM

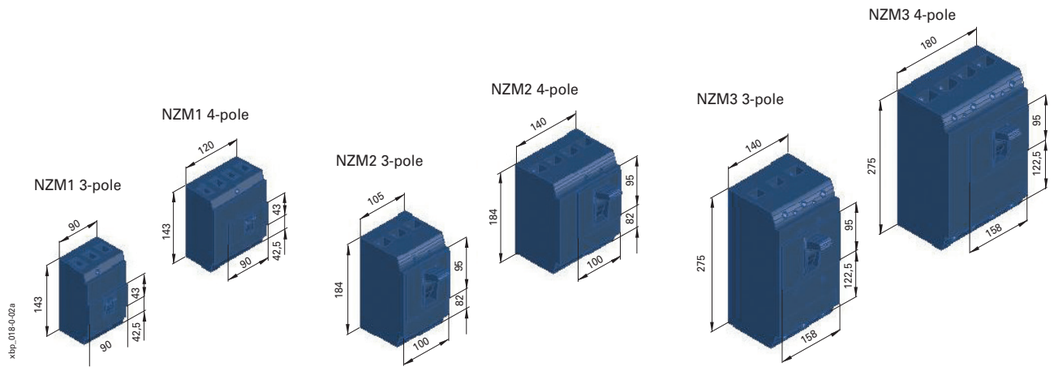

Front Plate for Several Devices such as NZM, PSN-FP / PSN-FP/S

- To cover the areas occupied by circuit breakers
- Metal front plates making contact with the enclosure
- Material: Sheet steel, powder-coated, RAL 7035
- Scope of delivery: 1 Front plate incl. empty-space cover (with NZM2, NZM3 and NZM4)

Dimensions (mm)

Type	Max. number of 3-/4-pole NZMs	A3	B2	Number of empty-space covers
PSN-FP-NZM1X-2/2-400/200-MV	2x NZM1 / 2x NZM1	320	199	1x NZM1 Cover plate
PSN-FP/S-NZM1X-3/3-600/200-MV	3x NZM1 / 3x NZM1	520	199	2x NZM1 Cover plates
PSN-FP/S-NZM1X-4/4-800/200-MV	4x NZM1 / 4x NZM1	720	199	3x NZM1 Cover plates
PSN-FP/S-NZM1X-5/5-1000/200-MV	5x NZM1 / 5x NZM1	920	199	4x NZM1 Cover plates
PSN-FP/S-NZM1X-6/6-1200/200-MV	6x NZM1 / 6x NZM1	1120	199	5x NZM1 Cover plates
PSN-FP-NZM2X-2/0-400/300-MV	2x NZM2 / -	320	299	1x NZM2 Cover plate
PSN-FP-NZM2X-3/2-600/300-MV	3x NZM2 / 2x NZM2	520	299	2x NZM2 Cover plates
PSN-FP-NZM2X-4/4-800/300-MV	4x NZM2 / 4x NZM2	720	299	3x NZM2 Cover plates
PSN-FP-NZM2X-4/4-1000/300-MV	4x NZM2 / 4x NZM2	920	299	3x NZM2 Cover plates
PSN-FP-NZM2X-4/4-1200/300-MV	4x NZM2 / 4x NZM2	1120	299	3x NZM2 Cover plates
PSN-FP-NZM3X-2/2-600/500-MV	2x NZM3 / 2x NZM3	520	499	1x NZM3 Cover plate
PSN-FP-NZM3X-3/3-800/500-MV	3x NZM3 / 3x NZM3	720	499	2x NZM3 Cover plates
PSN-FP-NZM3X-3/3-1200/500-MV	3x NZM3 / 3x NZM3	920	499	2x NZM3 Cover plates
PSN-FP-NZM3X-3/3-1200/500-MV	3x NZM3 / 3x NZM3	1120	499	2x NZM3 Cover plates

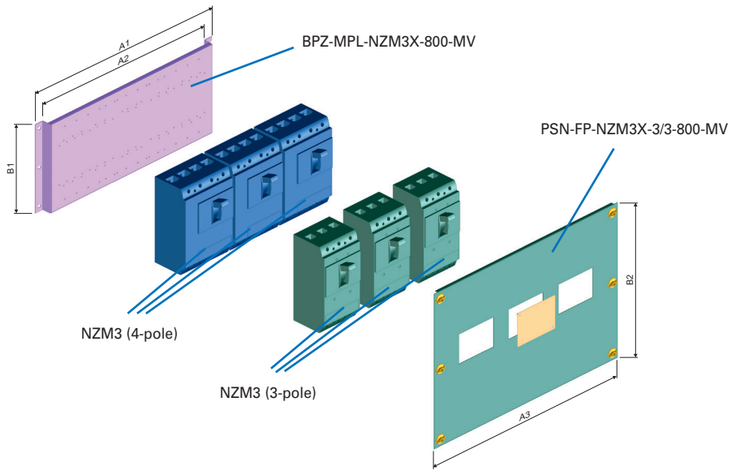

Mounting Plate for NZM symmetrical, BPZ-MPL-NZM..-…-MX

- For mounting one NZM in horizontal position or several NZMs in vertical position
- Connecting the NZM circuit breakers can be done from the rear (cut-outs are prepared)
- Suitable for wall-mounted or floor-standing enclosures with ProfiSNAP mounting frame
- Material: Sheet steel (2 mm), galvanized
- Scope of delivery: 1 Mounting plate, mounting accessories

Dimensions (mm)

Type	Max. number of 3-/4-pole NZMs	A1	A2	B1	C1
BPZ-MPL-NZM1X-600-MX	3x NZM1 / 3x NZM1	492	432	199	87
BPZ-MPL-NZM1X-800-MX	4x NZM1 / 4x NZM1	692	632	199	87
BPZ-MPL-NZM2X-600-MX	2x NZM2 / 2x NZM2	492	432	199	52
BPZ-MPL-NZM2X-800-MX	3x NZM2 / 3x NZM3	692	632	199	52
BPZ-MPL-NZM3-600-MX	1x NZM3 / 1x NZM3	492	432	299	34
BPZ-MPL-NZM3-800-MX	1x NZM3 / 1x NZM3	692	632	299	34

DIN Rail for Mounting Plate NZM1 symmetrical, BPZ-DINR

- For mounting installation devices next to 1x NZM1 (vertical) on the same level
- For mounting plate 600 mm: 1x BPZ-DINR17-MPL-NZM1X-600-MV
- For mounting plate 800 mm: 1x BPZ-DINR27-MPL-NZM1X-800-MV
- Material: Aluminium
- Scope of delivery: 1 DIN rail, mounting accessories

Example of application

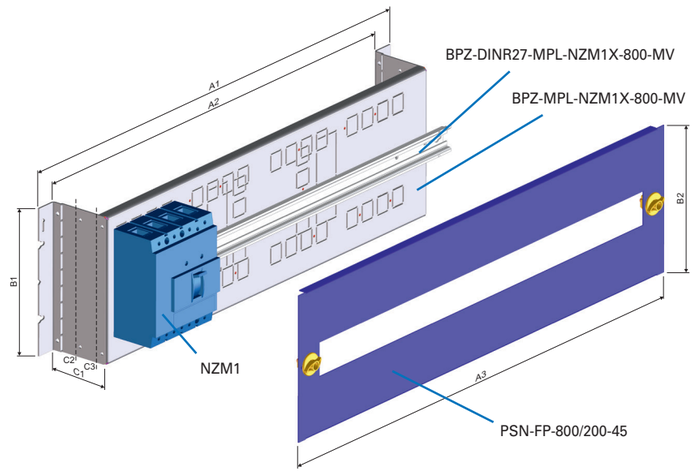

Fixing Set for max. Installation Depth of the NZM symmetrical Mounting Plate, BPZ-KIT-MPL-NZMX-XDV/XMV/XR-XVTL

- For mounting an NZM circuit breaker with swing handle (NZM.-XDV), with mechanical lock (NZM.-XMV) or remote operation (NZM.-XR...)
- Depending on the application, the fixing straps and/or the mounting plate need to be shortened accordingly
- Due to the installation depth, the set in combination with the mounting plate can only be used in xE Light distribution boards
- Material: Sheet steel (2 mm), galvanized
- Scope of delivery: 4 Fixing straps, mounting accessories

Examples of appliction for the fixing set BPZ-KIT-MPL-NZMX-XDV/XMV/XR-XVTL

Application	Type of mounting plate (Width = 800 mm)	Fixing set required?	Notes
NZM1 with standard toggle	BPZ-MPL-NZM1X-800-MX	NO	Mounting plate in standard depth (C1)
NZM1 with swing handle on circuit breaker (XDV)	BPZ-MPL-NZM1X-800-MX	NO	Fix mounting plate in C2 position
NZM1 with mechanical lock (XMV)	BPZ-MPL-NZM1X-800-MX	NO	Fix mounting plate in C3 position
NZM2 with standard toggle	BPZ-MPL-NZM2X-800-MX	NO	Mounting plate in standard depth (C1)
NZM2 with swing handle on circuit breaker (XDV)	BPZ-MPL-NZM2X-800-MX	NO	Fix mounting plate in C3 position
NZM2 with mechanical lock (XMV)	BPZ-MPL-NZM2X-800-MX	Yes	Setup acc. to assembly instructions
NZM2 with remote operation (XR)	BPZ-MPL-NZM2X-800-MX	Yes	Setup acc. to assembly instructions
NZM3 with standard toggle	BPZ-MPL-NZM3-800-MX	NO	Mounting plate in standard depth (C1)
NZM3 with swing handle on circuit breaker (XDV)	BPZ-MPL-NZM3-800-MX	Yes	Setup acc. to assembly instructions
NZM3 with mechanical lock (XMV)	BPZ-MPL-NZM3-800-MX	Yes	Setup acc. to assembly instructions
NZM3 with remote operation (XR	BPZ-MPL-NZM3-800-MX	Yes	Setup acc. to assembly instructions
NZM4 with standard toggle	BPZ-MPL-NZM4-800-MX-XVTL	NO	Mounting plate in standard depth (C1)
NZM4 with swing handle on circuit breaker (XDV)	BPZ-MPL-NZM4-800-MX-XVTL	Yes	Setup acc. to assembly instructions
NZM4 with remote operation (XR	BPZ-MPL-NZM4-800-MX-XVTL	NO	Order 2x XBBB085-1 + 2x XSFS06-1

Front Plate NZM symmetrical, PSN-FP/S

- To cover the areas occupied by circuit breakers
- Metal front plates making contact with the enclosure
- Material: Sheet steel, powder-coated, RAL 7035
- Scope of delivery: 1 Front plate (with empty-space cover where applicable)

Dimensions (mm)

Application	Max. number of 4-pole NZMs	A3	B2	Number of empty-space cover plates
PSN-FP/S-NZM1X-3/3-600/200-MV	3x NZM1 (vertical)	520	199	2x NZM1 Cover plate
PSN-FP/S-NZM1X-3/3-600/200-MV	1x NZM1+XFI (vertical)	520	199	2x NZM1 Cover plate
PSN-FP/S-NZM1-600/200-MH	1x NZM1 (horizontal)	520	199	-
PSN-FP/S-NZM1X-4/4-800/200-MV	4x NZM1 (vertical)	720	199	3x NZM1 Cover plate
PSN-FP/S-NZM1X-4/4-800/200-MV	2x NZM1+XFI (vertical)	720	199	3x NZM1 Cover plate
PSN-FP/S-NZM1-800/200-MH	1x NZM1 (horizontal)	720	199	-
PSN-FP/S-NZM2-600/300-MV	1x NZM2 (vertical)	520	299	-
PSN-FP/S-NZM2X-2/2-600/300-MV	2x NZM2 (vertical)	520	299	1x NZM2 Cover plate
PSN-FP/S-NZM2-600/400-MV-XFI	1x NZM2+XFI (vertical)	520	399	-
PSN-FP/S-NZM2-600/200-MH	1x NZM2 (horizontal)	520	199	-
PSN-FP/S-NZM2-600/200-MH-XFI	1x NZM2+XFI (horizontal)	520	199	-
PSN-FP/S-NZM2-800/300-MV	1x NZM2 (vertical)	720	299	-
PSN-FP/S-NZM2X-3/3-800/300-MV	3x NZM2 (vertical)	720	299	2x NZM2 Cover plate
PSN-FP/S-NZM2-800/400-MV-XFI	1x NZM2+XFI (vertical)	720	399	-
PSN-FP/S-NZM2-800/200-MH	1x NZM2 (horizontal)	720	199	-
PSN-FP/S-NZM2-800/200-MH-XFI	1x NZM2+XFI (horizontal)	720	199	-
PSN-FP/S-NZM3-600/400-MV	1x NZM3 (vertical)	520	399	-
PSN-FP/S-NZM3-600/400-MH	1x NZM3 (horizontal)	520	399	-
PSN-FP/S-NZM3-800/400-MV	1x NZM3 (vertical)	720	399	-
PSN-FP/S-NZM3-800/400-MH	1x NZM3 (horizontal)	720	399	-

Front plate NZM symmetrisch, PSN-FP/S

Example of application

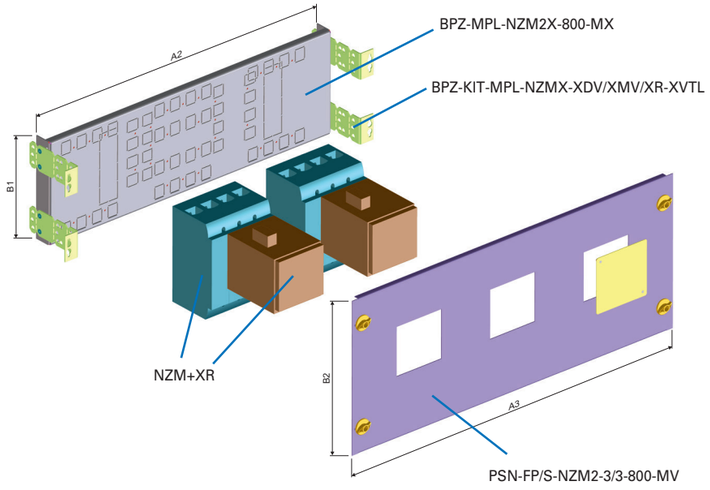

vt11519, vt11619

EP-502382_L

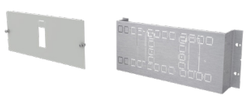

EP-502385_L

EP-502387_L

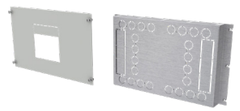

Width [mm]	Installation back frame PDE1 single Toggle operation Rear connection (except PDE1 width 400 mm) RAL 7035 grey	PDE2 single	PDE3 single
	Cat. No. per unit unit = 1 pc.	Cat. No. per unit unit = 1 pc.	Cat. No. per unit unit = 1 pc
Mounting kits for Moulded Case Circuit Breaker, Power Defense 3-/4-pole, frame size 1-3 (horizontal configuration)			
400	**PSN-PDE1-400/200-MH** EP-502381	**PSN-PDE2-400/200-MH** EP-502384	-
600	**PSN-PDE1-600/200-MH** EP-502382	**PSN-PDE2-600/200-MH** EP-502385	**PSN-PDE3-600/300-MH** EP-502387
800	**PSN-PDE1-800/200-MH** EP-502383	**PSN-PDE2-800/200-MH** EP-502386	**PSN-PDE3-800/300-MH** EP-502388
1000	-	-	-

EP-502373_L

EP-502376_L

EP-502379_L

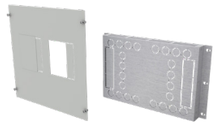

Installation back frame PDE1 multiple Toggle operation Rear or top/bottom connection RAL 7035 grey	Installation back frame PDE2 multiple (except width 400 mm)	Installation back frame PDE3 multiple (except width 400 mm)
Cat. No. per unit unit = 1 pc.	Cat. No. per unit unit = 1 pc.	Cat. No. per unit unit = 1 pc.
Mounting kits for Moulded Case Circuit Breaker, Power Defense 3-/4-pole, frame size 1-3 (vertical configuration)		
PSN-PDE1X-2/2-400/200-MV EP-502372 (up to 2x PDE1)	**PSN-PDE2-400/300-MV** EP-502375	**PSN-PDE3-400/500-MV** EP-502378
PSN-PDE1X-3/3-600/200-MV EP-502373 (up to 3x PDE1)	**PSN-PDE2X-2/2-600/300-MV** EP-502376 (up to 2x PDE2)	**PSN-PDE3X-2/2-600/500-MV** EP-502379 (up to 2x PDE3)
PSN-PDE1X-4/4-800/200-MV EP-502374 (up to 4x PDE1)	**PSN-PDE2X-3/3-800/300-MV** EP-502377 (up to 3x PDE2)	**PSN-PDE3X-3/3-800/500-MV** EP-502380 (up to 3x PDE3)
-	-	-

EP-502258_L

EP-502271_L

EP-502272_L

Width [mm]	Installation back frame XNH00 or mounting fuse sockets multiple		Mounting side wall (MSW) XNH00 or mounting fuse sockets multiple
	Panel mounting incl. prepared mounting plate RAL 7035 grey	3-pole busbar mounting (SASY60i) without copper busbars RAL 7035 grey	3-pole busbar mounting (SASY60i) without copper busbars RAL 7035 grey
	Cat. No. per unit unit = 1 pc.	Cat. No. per unit unit = 1 pc.	Cat. No. per unit unit = 1 pc
Mounting kits for Fuse Switch Disconnectors, frame size 00, XNH00 and mounting fuse			
400	**PSN-XNH00X-2/1-400/300-MV** EP-502255 (up to 2x XNH00-3p / 1x XNH00-4p)	**PSN-SASY-XNH00-400/300-3P** EP-502269 (up to 2x XNH00-3p)	**PSN-SASY-XNH00-400/300-3P-MSW** EP-502270 (up to 2x XNH00-3p)
600	**PSN-XNH00X-4/1-600/300-MV** EP-502258 (up to 4x XNH00-3p / 1x XNH00-4p)	**PSN-SASY-XNH00-600/300-3P** EP-502271 (up to 4x XNH00-3p)	**PSN-SASY-XNH00-600/300-3P-MSW** EP-502272 (up to 4x XNH00-3p)
800	**PSN-XNH00X-6/1-800/300-MV** EP-502262 (up to 6x XNH00-3p / 1x XNH00-4p)	**PSN-SASY-XNH00-800/300-3P** EP-502273 (up to 5x XNH00-3p)	**PSN-SASY-XNH00-800/300-3P-MSW** EP-502274 (up to 5x XNH00-3p)
1000	-	**PSN-SASY-XNH00-1000/300-3P** EP-502275 (up to 6x XNH00-3p)	**PSN-SASY-XNH00-1000/300-3P-MSW** EP-502276 (up to 6x XNH00-3p)
1200	-	**PSN-SASY-XNH00-1200/300-3P** EP-502277 (up to 8x XNH00-3p)	**PSN-SASY-XNH00-1200/300-3P-MSW** EP-502278 (up to 8x XNH00-3p)

EP-502266_L

EP-502259_L

EP-502260_L

EP-502261_L

Installation back frame XNH1/2/3 - individual assembly	Installation back frame		
3-pole busbar mounting (SASY60i) without busbar system RAL 7035 grey	XNH1 single or multiple Panel mounting incl. prepared mounting plate RAL 7035 grey	XNH2 single or multiple	XNH3 single or multiple
Cat. No. per unit unit = 1 pc.	Cat. No. per unit unit = 1 pc.	Cat. No. per unit unit = 1 pc.	
Mounting kits for Fuse Switch Disconnectors, frame size 1/2/3, XNH1/2/3			
-	**PSN-XNH1-1/0-400/450-MV** EP-502256 (up to 1x XNH1-3p)	**PSN-XNH2-1/X-400/450-MV** EP-502257 (up to 1x XNH2-3p)	-
PSN-SASY-XNH1/2/3-600/450-3P EP-502266 (up to 2x XNH1 / 2x XNH2 / 1x XNH3)	**PSN-XNH1X-2/1-600/450-MV** EP-502259 (up to 2x XNH1-3p / 1x XNH1-4p)	**PSN-XNH2X-2/X-600/450-MV** EP-502260 (up to 2x XNH2-3p)	**PSN-XNH3-1/0-600/450-MV** EP-502261 (up to 1x XNH3-3p)
PSN-SASY-XNH1/2/3-800/450-3P EP-502267 (up to 3x XNH1 / 3x XNH2 / 2x XNH3)	**PSN-XNH1X-3/1-800/450-MV** EP-502263 (up to 3x XNH1-3p / 1x XNH1-4p)	**PSN-XNH2X-3/X-800/450-MV** EP-502264 (up to 3x XNH2-3p)	**PSN-XNH3X-2/1-800/450-MV** EP-502265 (up to 2x XNH3-3p / 1x XNH3-4p)
PSN-SASY-XNH1/2/3-1000/450-3P EP-502268 (up to 4x XNH1 / 3x XNH2 / 3x XNH3)	-	-	-
-	-	-	-

Mounting Set for NH Fuse Disconnector Switches XNH, PSN-XNH

- Mounting set for fixing XNH fuse disconnector switches on a mounting plate
- Sizes (rated operating current)
  XNH00 (160 A), XNH1 (250 A), XNH2 (400 A), XNH3 (630 A)
- Front panel is prepared for mounting a 3-pole device, additional perforations for multiple mounting are prepared and can be knocked out according to your requirements by means of a suitable tool
- Finger-safe finish is guaranteed even without using an additional empty-space cover
- Suitable for both wall-mounted and floor-standing cabinets with ProfiSNAP mounting frame (no set-up on MSW mounting-side-panel possible)
- Material
  Mounting plate: Steel sheet (2 mm), galvanized
  Front panel: Steel sheet, powder-coated, RAL 7035 or RAL 9016
- Scope of delivery: 1 Mounting plate, 1 front panel, fixing material

Dimensions (mm)

Type	Max. number of 3-/4-pole XNH	A1	A2	A3	A4	B1	B2	C1
PSN-XNH00X-2/1-400/300-MV	2x XNH00 / 1x XNH00 *)	292	236	320	212	105	299	110
PSN-XNH00X-4/1-600/300-MV	4x XNH00 / 1x XNH00 *)	492	436	520	425	105	299	110
PSN-XNH00X-6/1-800/300-MV	6x XNH00 / 1x XNH00 *)	692	636	720	638	105	299	110
PSN-XNH1-1/0-400/450-MV	1x XNH1 / —	292	236	320	180	130	449	85
PSN-XNH1X-2/1-600/450-MV	2x XNH1 / 1x XNH1 *)	492	436	520	365	130	449	85
PSN-XNH1X-3/1-800/450-MV	3x XNH1 / 1x XNH1 *)	692	636	720	550	130	449	85
PSN-XNH2-1/X-400/450-MV	1x XNH2 / —	292	236	320	206	130	449	65
PSN-XNH2X-2/X-600/450-MV	2x XNH2 / —	492	436	520	417	130	449	65
PSN-XNH2X-3/X-800/450-MV	3x XNH2 / —	692	636	720	628	130	449	65
PSN-XNH3-1/0-600/450-MV	1x XNH3 / —	492	436	520	246	130	449	65
PSN-XNH3X-2/1-800/450-MV	2x XNH3 / 1x XNH3 *)	692	636	720	497	130	449	65

*) Where necessary, it is possible to install several 4-pole devices, but the cut-out will then need to be adjusted accordingly.

Example of application

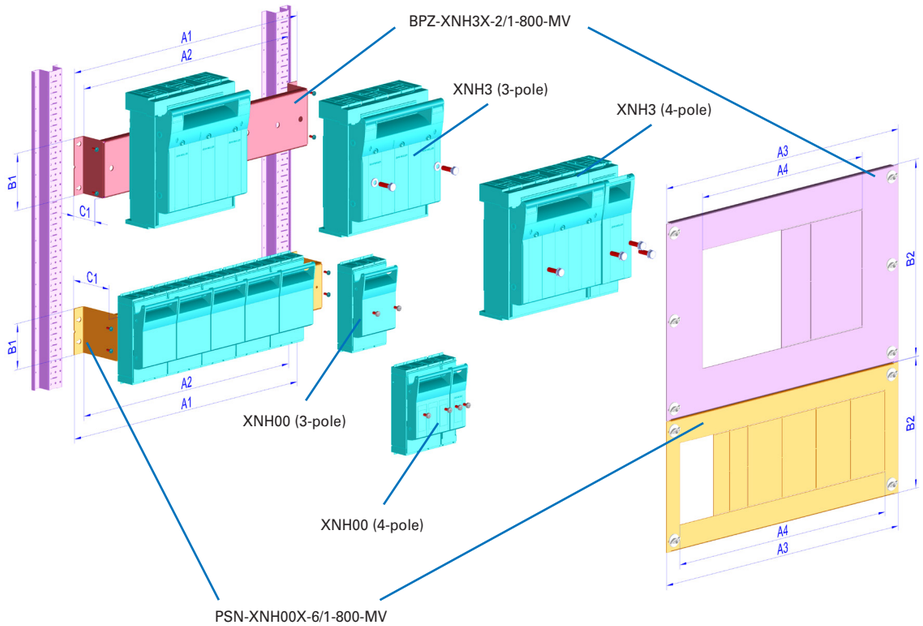

Front Panel for NH Fuse Disconnector Switches XNH when installed on a busbar of 60 mm (SASY 60i) at the base frame

- When XNH devices are used for a 60 mm busbar system
- Sizes (rated operating current)
  XNH1 (250 A), XNH2 (400 A), XNH3 (630 A)
  XNH00 (160 A) – when using a cover for the connection area
  XNH00-XKSA-36 (at the bottom) or XNH00-XKSA-66 (at the top)
- The busbar system (SASY 60i) can directly be fixed at the base frame without using any mounting brackets
- If devices of the same size (except XNH00) are installed, the empty-space cover included in the delivery complies with all requirements. It only needs to be adjusted to the number available.
- The front panel adjusts itself to the required level of the devices. It is also possible to install devices of different sizes next to each other (in this case it is not possible to use the empty-space cover).
- Suitable for wall-mounted and floor-standing cabinets with a ProfiSNAP mounting frame
- Material: Sheet steel, powder-coated, RAL 7035
- Scope of delivery: 1 Front panel, 1 empty-space cover

Dimensions (mm)

Type	Max. number of 3-pole XNH (same size)	Max. number of 3-pole XNH00 with cover for connection area	A3	A4	B2
PSN-SASY-XNH1/2/3-600/450-3P	2x XNH1 / 2x XNH2 / 1x XNH3	4x XNH00	520	434	449
PSN-SASY-XNH1/2/3-800/450-3P	3x XNH1 / 3x XNH2 / 2x XNH3	5x XNH00	720	634	449

Example of application

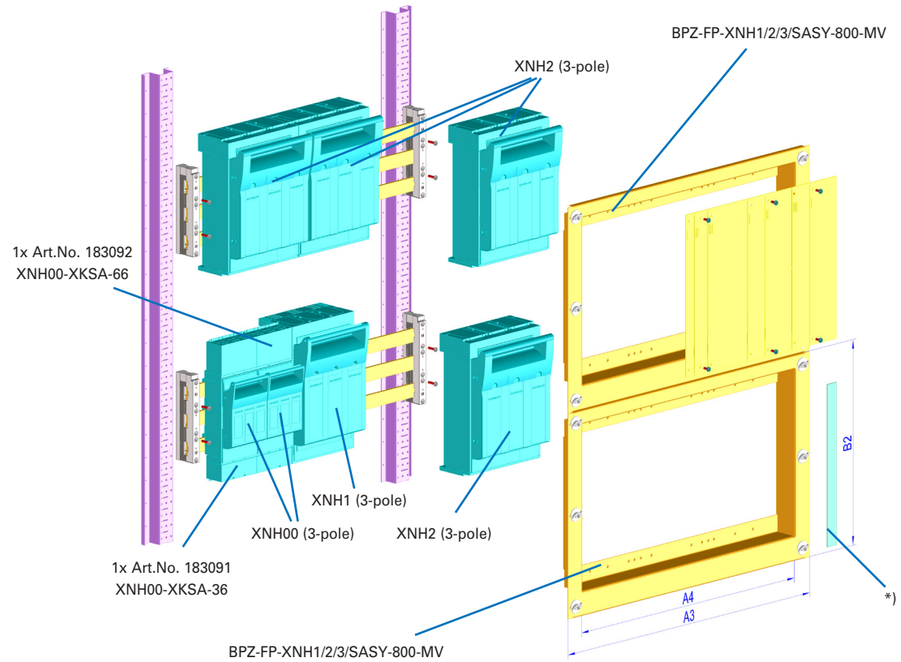

*) Individual cover strip made of insulation material to be used when installing devices of different size (depending on the requirements - to be prepared by the customer)

Mounting sets for 3-pole IEC busbar support 630 A SASY 60i, PSN-SASY-XNH00...

- Mounting sets for fixing the busbar supports BBS-3/FL
- Material
  Front plate: Sheet steel, powder-coated, RAL 7035
  Mounting angles: Sheet steel (2 mm), zinc-coated
- For surface mounted or floor-standing distribution boards
- Scope of delivery:
  Width 400 to 800 mm: 2 fixing angles, 1 front plate, fixing material
  Width 1000 to 1200 mm: 3 fixing angles, 2 profiles, 1 front plate, fixing material

Dimensions (mm)

Type	Mounting angles				Front plate				
	Outside dimensions				Inside dimensions				
	Width	Height			Width	Height			Max. number of 3-pole XNH00
	A1	B1	A2	C	A3	B2	A4	B3	without connection section cover
PSN-SASY-XNH00-400/300-3P	296	215	222	63	320	300	234	194	2x XNH00
PSN-SASY-XNH00-600/300-3P	496	215	422	63	520	300	434	194	4x XNH00
PSN-SASY-XNH00-800/300-3P	696	215	622	63	720	300	634	194	5x XNH00
PSN-SASY-XNH00-1000/300-3P	896	215	398	63	920	300	834	194	6x XNH00
PSN-SASY-XNH00-1200/300-3P	1096	215	498	63	1120	300	1034	194	8x XNH00

VFor board widths 400, 600, 800 mm

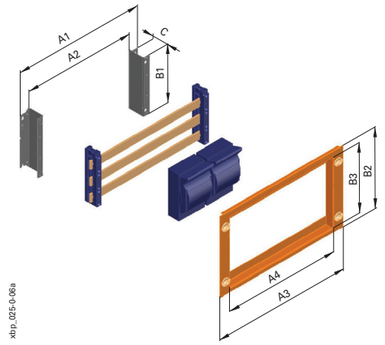

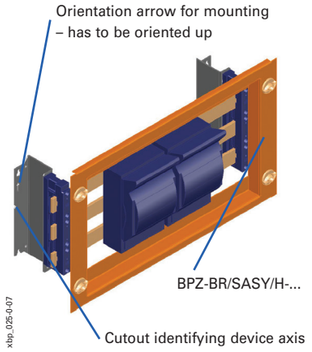

For board widths 1000 and 1200 mm

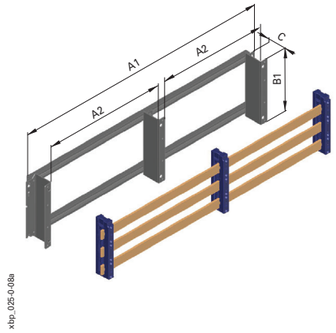

Mounting plates with pre-drilled holes for mounting busbar holders SASY 60i BPZ-MPLSASY

- For mounting of holders of SASY 60i system
- Material: Sheet steel (2 mm), zinc-coated
- Scope of delivery: 1 mounting plate, fixing material

Dimensions (mm)

Type	Width		Height		Number of BEL elements on the side
	A1	A2	B1	B2	
BPZ-MPLSASY-600	488	428	250	175	2
BPZ-MPLSASY-800	688	648	250	175	2
BPZ-MPLSASY-1000	888	846	250	175	2
BPZ-MPLSASY-1200	1088	1046	250	175	2

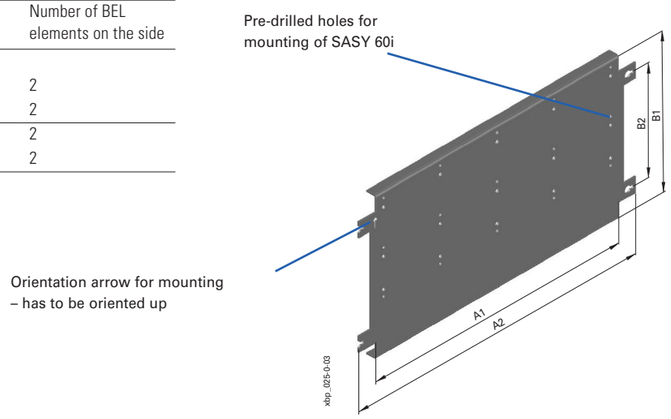

xEnergy Distribution Boards

Mounting kits for BZM, Dumeco and QSA

	EP-502368_L	EP-502390_L	EP-502393_L	EP-502396_L	EP-502400_L
Width [mm]	Installation back frame BZM1/2 single or multiple (up to 400 A)	Installation back frame Dumeco 160 - 400 A single	Installation back frame Dumeco 630 - 1000 A *)	Installation back frame QSA 63 - 160 A single	Installation back frame QSA 160 - 800 A single *)
	Panel mounting incl. prepared mounting plate RAL 7035 grey	Panel mounting incl. prepared mounting plate + option for BPZ-BBS-4/250 RAL 7035 grey	Panel mounting incl. prepared mounting plate, min. enclosure depth of 300 mm (BP-F / BPM-F) RAL 7035 grey	Panel mounting incl. prepared mounting plate + option for BPZ-BBS-4/250 RAL 7035 grey	Panel mounting incl. prepared mounting plate, min. enclosure depth of 400 mm (BPM-F) RAL 7035 grey
	Cat. No. per unit unit = 1 pc.	Cat. No. per unit unit = 1 pc.	Cat. No. per unit unit = 1 pc.	Cat. No. per unit unit = 1 pc.	Cat. No. per unit unit = 1 pc.
Mounting kits for BZM, Dumeco and QSA					
400	**PSN-BZM 1/2-400/300-MV** EP-502367	**PSN-DMV 160/400-400/300-MV-RH** EP-502389	**PSN-DMV 630/1000-400/400-MV-RH** EP-502392	**PSN-QSA 63/160-400/300-MV-RH** EP-502395	-
600	**PSN-BZM 1/2-600/300-MV** EP-502368	**PSN-DMV 160/400-600/300-MV-RH** EP-502390	**PSN-DMV 630/1000-600/400-MV-RH** EP-502393	**PSN-QSA 63/160-600/300-MV-RH** EP-502396	**PSN-QSA 200/400-600/300-MV-RH** EP-502398 **PSN-QSA 400/800-600/400-MV-RH** EP-502400
800	**PSN-BZM 1/2-800/300-MV** EP-502369	**PSN-DMV 160/400-800/300-MV-RH** EP-502391	**PSN-DMV 630/1000-800/400-MV-RH** EP-502394	**PSN-QSA 63/160-800/300-MV-RH** EP-502397	**PSN-QSA 200/400-800/300-MV-RH** EP-502399 **PSN-QSA 400/800-800/400-MV-RH** EP-502401
1000	**PSN-BZM 1/2-1000/300-MV** EP-502370	-	-	-	-
1200	**PSN-BZM 1/2-1200/300-MV** EP-502371	-	-	-	-

*) Attention: The rated current of the main incomer must not exceed the nominal rating of the switchgear assembly!

xEnergy Distribution Boards

Mounting kits for Earthing and Neutral conductors

	vt01208	vt14818	EP-502285_L	EP-502280_L	wa_vt09513 + wa_vt09213	
Width [mm]	Installation back frame Panel mounting	Installation back frame Panel mounting	Mounting side wall (MSW) Fixing brackets + support rails		Installation back frame Corner tower set (short) / terminal support bar Intended for use with screw-type terminals KL and plug-type terminals KSK	
	3-/4-pole busbar mounting (SASY60i) without busbar system	1-pole busbar mounting (SASY60i) incl. 1-pole busbar system (20x5 mm) and universal conductor terminals AKU up to 70 mm² terminal cross-section	1-pole busbar mounting (SASY60i) incl. 1-pole busbar system (30x5 mm) RAL 7035 grey	2-pole busbar mounting (SASY60i) incl. 2-pole busbar system (30x5 mm)	No need to order BPZ-CTS-S for BP-O-... assemblies (flat-pack) Terminal support bar (empty)	equipped with screw-type terminals up to 35mm² terminal cross-section
	Cat. No. per unit unit = 1 pc.	Cat. No. per unit unit = 1 pc.	Cat. No. per unit unit = 1 pc.	Cat. No. per unit unit = 1 pc.		
Mounting kits for Earthing and Neutral conductors						
400	-	**BPZ-GND-400** 187867	**PSN-SASY-PE-400/100-1P-MSW** EP-502284	**PSN-SASY-N/PE-400/150-2P-MSW** EP-502279	**BPZ-CTS-S** 106445 **BPZ-TSB-400** 106447	**BPZ-CTS-S** 106445 **BPZ-TSB-400/1KL29** 187872
600	**BPZ-MPLSASY-600** 114830	**BPZ-GND-600** 187868	**PSN-SASY-PE-600/100-1P-MSW** EP-502285	**PSN-SASY-N/PE-600/150-2P-MSW** EP-502280	**BPZ-CTS-S** 106445 **BPZ-TSB-600** 106448	**BPZ-CTS-S** 106445 **BPZ-TSB-600/2KL29** 187873
800	**BPZ-MPLSASY-800** 114831	**BPZ-GND-800** 187869	**PSN-SASY-PE-800/100-1P-MSW** EP-502286	**PSN-SASY-N/PE-800/150-2P-MSW** EP-502281	**BPZ-CTS-S** 106445 **BPZ-TSB-800** 106449	**BPZ-CTS-S** 106445 **BPZ-TSB-800/2KL45** 187874
1000	**BPZ-MPLSASY-1000** 114832	**BPZ-GND-1000** 187870	**PSN-SASY-PE-1000/100-1P-MSW** EP-502287	**PSN-SASY-N/PE-1000/150-2P-MSW** EP-502282	**BPZ-CTS-S** 106445 **BPZ-TSB-1000** 106450	**BPZ-CTS-S** 106445 **BPZ-TSB-1000/2KL60** 187875
1200	**BPZ-MPLSASY-1200** 114833	**BPZ-GND-1200** 187871	**PSN-SASY-PE-1200/100-1P-MSW** EP-502288	**PSN-SASY-N/PE-1200/150-2P-MSW** EP-502283	**BPZ-CTS-S** 106445 **BPZ-TSB-1200** 106451	**BPZ-CTS-S** 106445 **BPZ-TSB-1200/3KL45** 187876

Example of mounting of busbar system SASY 60i

- The busbars are fed via circuit breaker NZM
- The busbars serve as a connection point for particular devices

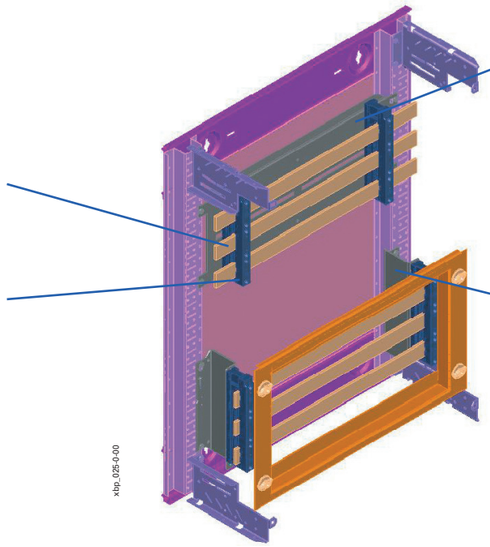

SASY 60i busbars

SASY 60i holder

SASY 60i busbars mounted onto mounting plate BPZ-MPL180.
It is possible to use mounting plates BPZ-MPLSASY (height 250 mm) with pre-drilled holes for mounting of SASY60i.

SASY 60i busbars mounted onto special set BPZ-BR/SASY/H

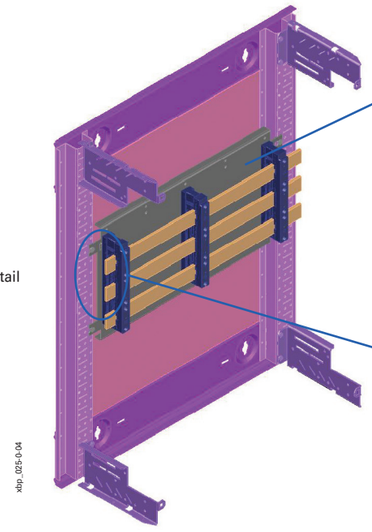

Application of busbar system SASY 60i on mounting plate BPZ-MPLSASY

Detail

Detail

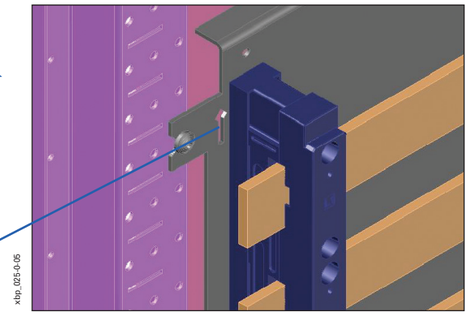

Orientation arrow for mounting – has to be oriented up

Example of mounting of busbar system SASY 60i

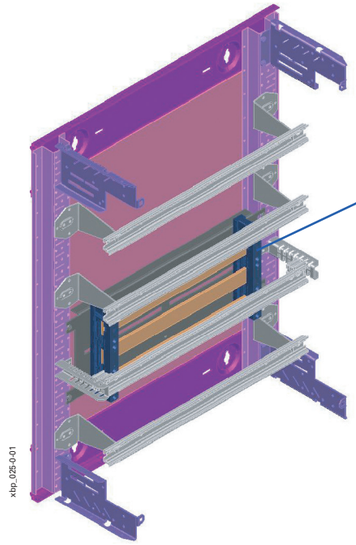

BPZ-MPL180...
SASY 60i busbars mounted onto mounting plate.
It is possible to use mounting plates BPZ-MPLSASY (height 250 mm) with pre-drilled holes for mounting of SASY60i.

The busbars can be placed under the device rails – save of space in the board.

For fastening of the device rail over the busbars the towers BPZ-TA have to be used (set BPZ-DINR...-T).

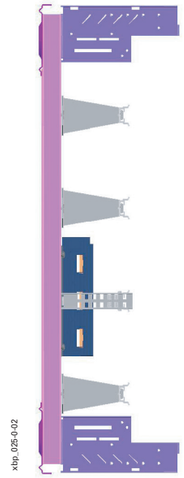

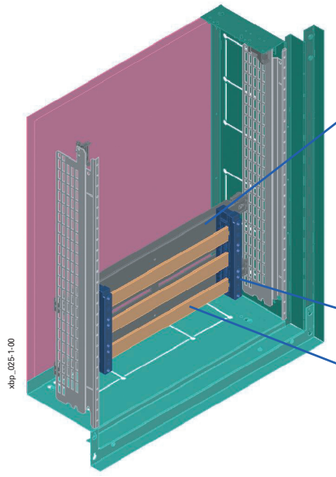

BPZ-MPL180... + BEL...
SASY 60i busbars mounted onto mounting plate – can be used for branching of L/N/PE conductors.

It is possible to use mounting plates BPZ-MPLSASY (height 250 mm) with pre-drilled holes for mounting of SASY60i.

Recommended mounting depth (5) – suitable for branching of L/N/PE as well as for direct mounting of devices onto the busbars.

Front plate with plastic insert can be use to cover – cutous are done according to actual device position.

SASY 60i holder

SASY 60i busbars

VT00805

vt13918

VT24806

EP-502236_L

Width [mm]	Height int. [mm]	Installation back frame / Mounting side wall (MSW) Mounting plate (punched) with cut-out in the center to fix devices by using cage nuts Galvanized sheet-metal 2 mm	Installation back frame / Mounting side wall (MSW) Mounting plate (blind) without any cut-out Galvanized sheet-metal 2 mm	Installation back frame / Mounting side wall (MSW) Mounting plate (section-high) without any cut-out Galvanized sheet-metal 2 mm	Installation back frame / Mounting side wall (MSW) Mounting plate without any cut-out incl. ProfiSNAP Front Plate (max. depth) Galvanized sheet-metal 2 mm
		Cat. No. per unit unit = 1 pc.	Cat. No. per unit unit = 1 pc.	Cat. No. per unit unit = 1 pc.	Cat. No. per unit unit = 1 pc.
Mounting plates for universal fixing of different components, BPZ-MPL...					
400	30	**BPZ-MPL30-400** 104316	-	-	-
	80	**BPZ-MPL80-400** 286765	-	-	-
	180	**BPZ-MPL180-400** 102472	-	-	-
	100	-	**BPZ-MPL100-400** 114799	-	-
	200	-	**BPZ-MPL200-400** 114805	-	-
	300	-	**BPZ-MPL300-400** 114811	-	**PSN-FP/MPL-400/300-BL** EP-502236
	400	-	**BPZ-MPL400-400** 114817	-	-
	500	-	**BPZ-MPL500-400** 114823	-	-
	350	-	-	**BPZ-MPL350-400** 108333	-
	650	-	-	**BPZ-MPL650-400** 108334	-
	950	-	-	**BPZ-MPL950-400** 108335	-
	1150	-	-	**BPZ-MPL1150-400** 108336	-
	1450	-	-	**BPZ-MPL1450-400** 108337	-
	1650	-	-	**BPZ-MPL1650-400** 108338	-
	1950	-	-	**BPZ-MPL1950-400** 108339	-

VT00805

vt13918

VT24806

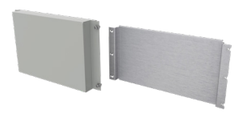
EP-502237_L

Width [mm]	Height int. [mm]	Installation back frame / Mounting side wall (MSW) Mounting plate (punched) with cut-out in the center to fix devices by using cage nuts Galvanized sheet-metal 2 mm	Installation back frame / Mounting side wall (MSW) Mounting plate (blind) without any cut-out Galvanized sheet-metal 2 mm	Installation back frame / Mounting side wall (MSW) Mounting plate (section-high) without any cut-out Galvanized sheet-metal 2 mm	Installation back frame / Mounting side wall (MSW) Mounting plate without any cut-out incl. ProfiSNAP Front Plate (max. depth) Galvanized sheet-metal 2 mm RAL 7035 grey
		Cat. No. per unit unit = 1 pc.	Cat. No. per unit unit = 1 pc.	Cat. No. per unit unit = 1 pc.	Cat. No. per unit unit = 1 pc.
600	30	**BPZ-MPL30-600** 104317	-	-	-
	80	**BPZ-MPL80-600** 286766	-	-	-
	180	**BPZ-MPL180-600** 102473	-	-	-
	100	-	**BPZ-MPL100-600** 114801	-	-
	200	-	**BPZ-MPL200-600** 114807	-	-
	300	-	**BPZ-MPL300-600** 114813	-	**PSN-FP/MPL-600/300-BL** EP-502237
	400	-	**BPZ-MPL400-600** 114819	-	-
	500	-	**BPZ-MPL500-600** 114825	-	-
	350	-	-	**BPZ-MPL350-600** 108340	-
	650	-	-	**BPZ-MPL650-600** 108341	-
	950	-	-	**BPZ-MPL950-600** 108342	-
	1150	-	-	**BPZ-MPL1150-600** 108343	-
	1450	-	-	**BPZ-MPL1450-600** 108344	-
	1650	-	-	**BPZ-MPL1650-600** 108345	-
	1950	-	-	**BPZ-MPL1950-600** 108346	-

VT00805

vt13918

VT24806

EP-502238_L

Width [mm]	Height int. [mm]	Installation back frame / Mounting side wall (MSW) Mounting plate (punched) with cut-out in the center to fix devices by using cage nuts Galvanized sheet-metal 2 mm	Installation back frame / Mounting side wall (MSW) Mounting plate (blind) without any cut-out Galvanized sheet-metal 2 mm	Installation back frame / Mounting side wall (MSW) Mounting plate (section-high) without any cut-out Galvanized sheet-metal 2 mm	Installation back frame / Mounting side wall (MSW) Mounting plate without any cut-out incl. ProfiSNAP Front Plate (max. depth) Galvanized sheet-metal 2 mm RAL 7035 grey
		Cat. No. per unit unit = 1 pc.	Cat. No. per unit unit = 1 pc.	Cat. No. per unit unit = 1 pc.	Cat. No. per unit unit = 1 pc.
Mounting plates for universal fixing of different components, BPZ-MPL...					
800	30	**BPZ-MPL30-800** 104318	-	-	-
	80	**BPZ-MPL80-800** 286767	-	-	-
	180	**BPZ-MPL180-800** 102474	-	-	-
	100	-	**BPZ-MPL100-800** 114802	-	-
	200	-	**BPZ-MPL200-800** 114808	-	-
	300	-	**BPZ-MPL300-800** 114814	-	**PSN-FP/MPL-800/300-BL** EP-502238
	400	-	**BPZ-MPL400-800** 114820	-	-
	500	-	**BPZ-MPL500-800** 114826	-	-
	350	-	-	**BPZ-MPL350-800** 108347	-
	650	-	-	**BPZ-MPL650-800** 108348	-
	950	-	-	**BPZ-MPL950-800** 108349	-
	1150	-	-	**BPZ-MPL1150-800** 108350	-
	1450	-	-	**BPZ-MPL1450-800** 108351	-
	1650	-	-	**BPZ-MPL1650-800** 108352	-
	1950	-	-	**BPZ-MPL1950-800** 108353	-

VT00805

vt13918

VT24806

EP-502239_L

Width [mm]	Height int. [mm]	Installation back frame / Mounting side wall (MSW) Mounting plate (punched) with cut-out in the center to fix devices by using cage nuts Galvanized sheet-metal 2 mm	Installation back frame / Mounting side wall (MSW) Mounting plate (blind) without any cut-out Galvanized sheet-metal 2 mm	Installation back frame / Mounting side wall (MSW) Mounting plate (section-high) without any cut-out Galvanized sheet-metal 2 mm	Installation back frame / Mounting side wall (MSW) Mounting plate without any cut-out incl. ProfiSNAP Front Plaate (max. depth) Galvanized sheet-metal 2 mm RAL 7035 grey
		Cat. No. per unit unit = 1 pc.	Cat. No. per unit unit = 1 pc.	Cat. No. per unit unit = 1 pc.	Cat. No. per unit unit = 1 pc.
1000	30	**BPZ-MPL30-1000** 104319	-	-	-
	80	**BPZ-MPL80-1000** 293609	-	-	-
	180	**BPZ-MPL180-1000** 102475	-	-	-
	100	-	**BPZ-MPL100-1000** 114803	-	-
	200	-	**BPZ-MPL200-1000** 114809	-	-
	300	-	**BPZ-MPL300-1000** 114815	-	**PSN-FP/MPL-1000/300-BL** EP-502239
	400	-	**BPZ-MPL400-1000** 114821	-	-
	500	-	**BPZ-MPL500-1000** 114827	-	-
	350	-	-	**BPZ-MPL350-1000** 153022	-
	650	-	-	**BPZ-MPL650-1000** 153024	-
	950	-	-	**BPZ-MPL950-1000** 153026	-
	1150	-	-	**BPZ-MPL1150-1000** 153028	-
	1450	-	-	**BPZ-MPL1450-1000** 153030	-
	1650	-	-	**BPZ-MPL1650-1000** 153032	-
	1950	-	-	**BPZ-MPL1950-1000** 153034	-

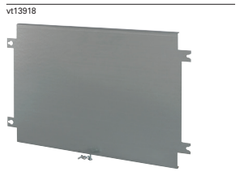

Width	Height int. [mm]	Installation back frame / Mounting side wall (MSW) Mounting plate (punched) with cut-out in the center to fix devices by using cage nuts Galvanized sheet-metal 2 mm	Installation back frame / Mounting side wall (MSW) Mounting plate (blind) without any cut-out Galvanized sheet-metal 2 mm	Installation back frame / Mounting side wall (MSW) Mounting plate (section-high) without any cut-out Galvanized sheet-metal 2 mm	Installation back frame / Mounting side wall (MSW) Mounting plate without any cut-out incl. ProfiSNAP Front Plate (max. depth) Galvanized sheet-metal 2 mm RAL 7035 grey
		Cat. No. per unit unit = 1 pc.	Cat. No. per unit unit = 1 pc.	Cat. No. per unit unit = 1 pc.	Cat. No. per unit unit = 1 pc.
Mounting plates for universal fixing of different components, BPZ-MPL...					
1200	30	**BPZ-MPL30-1200** 104330	-	-	-
	80	**BPZ-MPL80-1200** 293610	-	-	-
	180	**BPZ-MPL180-1200** 102476	-	-	-
	100	-	**BPZ-MPL100-1200** 114804	-	-
	200	-	**BPZ-MPL200-1200** 114810	-	-
	300	-	**BPZ-MPL300-1200** 114816	-	**PSN-FP/MPL-1200/300-BL** EP-502240
	400	-	**BPZ-MPL400-1200** 114822	-	-
	500	-	**BPZ-MPL500-1200** 114828	-	-
	350	-	-	**BPZ-MPL350-1200** 153023	-
	650	-	-	**BPZ-MPL650-1200** 153025	-
	950	-	-	**BPZ-MPL950-1200** 153027	-
	1150	-	-	**BPZ-MPL1150-1200** 153029	-
	1450	-	-	**BPZ-MPL1450-1200** 153031	-
	1650	-	-	**BPZ-MPL1650-1200** 153033	-
	1950	-	-	**BPZ-MPL1950-1200** 153035	-

Universal mounting plates BPZ-MPL

- For mounting busbar supports and many other devices
- Material: Sheet steel (2 mm), zinc-coated
- Scope of delivery: 1 mounting plate, fixing material

Dimensions (mm)

Type	Width				Height			Number of BEL elements on the side
	A1	A2	A3	A4	B1	B2	B	
BPZ-MPL30-400	288	49	190	20	30	0	8	2
BPZ-MPL30-600	488	44	190	20	30	0	8	2
BPZ-MPL30-800	688	46.5	185	20	30	0	8	2
BPZ-MPL30-1000	888	44	185	20	30	0	8	2
BPZ-MPL30-1200	1088	41.5	185	20	30	0	8	2
BPZ-MPL80-400	288	49	190	20	80	50	8	4
BPZ-MPL80-600	488	44	190	20	80	50	8	4
BPZ-MPL80-800	688	46.5	185	20	80	50	8	4
BPZ-MPL80-1000	888	44	185	20	80	50	8	4
BPZ-MPL80-1200	1088	41.5	185	20	80	50	8	4
BPZ-MPL180-400	288	49	190	20	180	150	8	4
BPZ-MPL180-600	488	44	190	20	180	150	8	4
BPZ-MPL180-800	688	46.5	185	20	180	150	8	4
BPZ-MPL180-1000	888	44	185	20	180	150	8	4
BPZ-MPL180-1200	1088	41.5	185	20	180	150	8	4

The cut-outs in the center of the mounting plate are used for fixing with cage nuts.

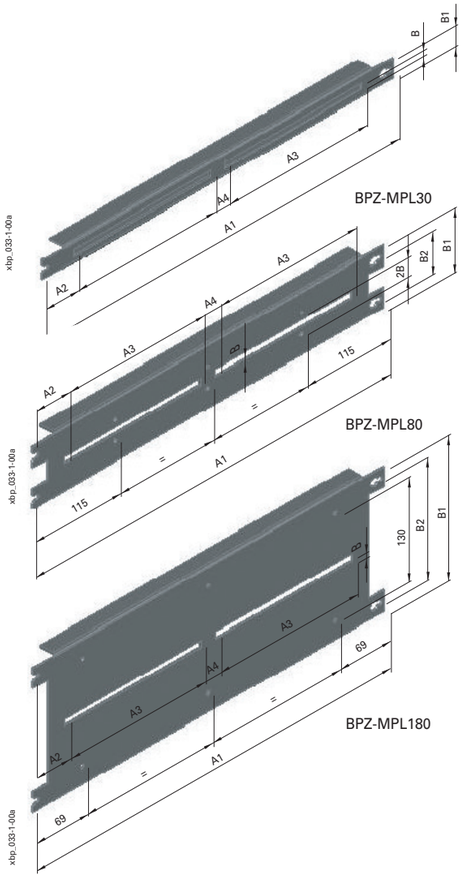

Dimensions (mm)

Type	Width		Height		Number of BEL elements on the side
	A1	A2	B1	B2	
BPZ-MPL100-400	288	246	100	50	4
BPZ-MPL100-425	313	253	100	50	4
BPZ-MPL100-600	488	446	100	50	4
BPZ-MPL100-800	688	648	100	50	4
BPZ-MPL100-1000	888	846	100	50	4
BPZ-MPL100-1200	1088	1046	100	50	4
BPZ-MPL200-400	288	246	200	150	4
BPZ-MPL200-425	313	253	200	150	4
BPZ-MPL200-600	488	446	200	150	4
BPZ-MPL200-800	688	648	200	150	4
BPZ-MPL200-1000	888	846	200	150	4
BPZ-MPL200-1200	1088	1046	200	150	4
BPZ-MPL300-400	288	246	300	200	4
BPZ-MPL300-425	313	253	300	200	4
BPZ-MPL300-600	488	446	300	200	4
BPZ-MPL300-800	688	648	300	200	4
BPZ-MPL300-1000	888	846	300	200	4
BPZ-MPL300-1200	1088	1046	300	200	4
BPZ-MPL350-400	288	246	280	250	4
BPZ-MPL350-600	488	446	280	250	4
BPZ-MPL350-800	688	648	280	250	4
BPZ-MPL350-1000	888	846	280	250	4
BPZ-MPL350-1200	1088	1046	280	250	4
BPZ-MPL400-400	288	246	400	300	4
BPZ-MPL400-425	313	253	400	250	4
BPZ-MPL400-600	488	446	400	300	4
BPZ-MPL400-800	688	648	400	300	4
BPZ-MPL400-1000	888	846	400	300	4
BPZ-MPL400-1200	1088	1046	400	300	4
BPZ-MPL500-400	288	246	500	400	4
BPZ-MPL500-425	313	253	500	300	4
BPZ-MPL500-600	488	446	500	400	4
BPZ-MPL500-800	688	648	500	400	4
BPZ-MPL500-1000	888	846	500	400	4
BPZ-MPL500-1200	1088	1046	500	400	4
BPZ-MPL650-400	288	246	580	550	4
BPZ-MPL650-600	488	446	580	550	4
BPZ-MPL650-800	688	648	580	550	4
BPZ-MPL650-1000	888	846	580	550	4
BPZ-MPL650-1200	1088	1046	580	550	4
BPZ-MPL950-400	288	246	880	850	4
BPZ-MPL950-600	488	446	880	850	4
BPZ-MPL950-800	688	648	880	850	4
BPZ-MPL950-1000	888	846	880	850	4
BPZ-MPL950-1200	1088	1046	880	850	4
BPZ-MPL1150-400	288	246	1080	1050	4
BPZ-MPL1150-600	488	446	1080	1050	4
BPZ-MPL1150-800	688	648	1080	1050	4
BPZ-MPL1150-1000	888	846	1080	1050	4
BPZ-MPL1150-1200	1088	1046	1080	1050	4
BPZ-MPL1450-400	288	246	1380	1350	4
BPZ-MPL1450-600	488	446	1380	1350	4
BPZ-MPL1450-800	688	648	1380	1350	4
BPZ-MPL1450-1000	888	846	1380	1350	4
BPZ-MPL1450-1200	1088	1046	1380	1350	4
BPZ-MPL1650-400	288	246	1580	1550	6
BPZ-MPL1650-600	488	446	1580	1550	6
BPZ-MPL1650-800	688	648	1580	1550	6
BPZ-MPL1650-1000	888	846	1580	1550	6
BPZ-MPL1650-1200	1088	1046	1580	1550	6
BPZ-MPL1950-400	288	246	1880	1850	6
BPZ-MPL1950-600	488	446	1880	1850	6
BPZ-MPL1950-800	688	648	1880	1850	6
BPZ-MPL1950-1000	888	846	1880	1850	6
BPZ-MPL1950-1200	1088	1046	1880	1850	6

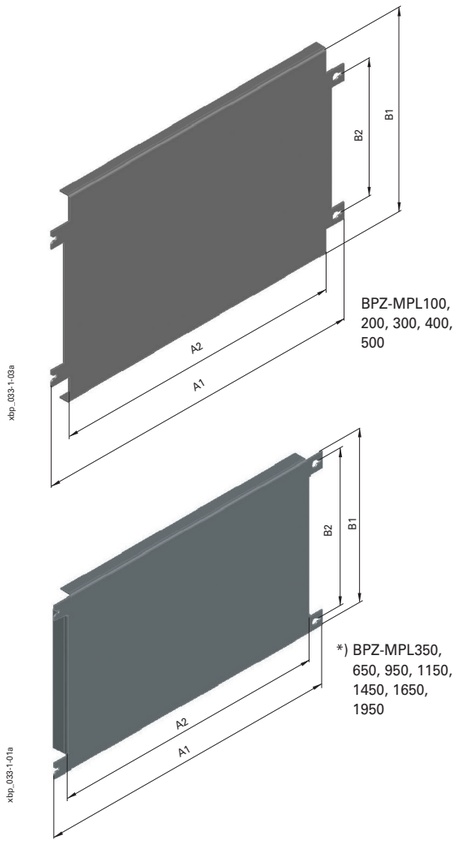

*) Mounting plates are used principally as section height in the respective enclosure height!

Mouting set for maximum depth of board PSN-FP/MPL-..

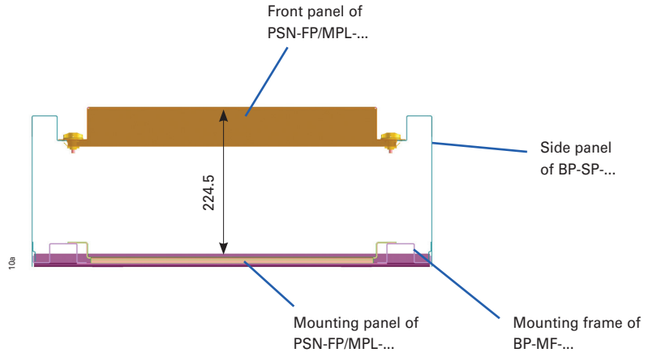

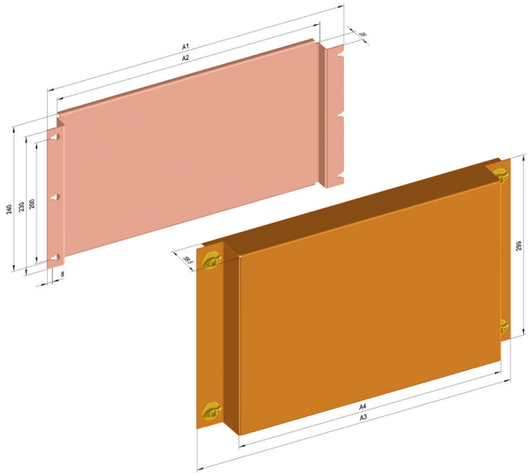

Type	A1	A2	A3	A4
PSN-FP/MPL-400/300-BL	292	236	320	234.5
PSN-FP/MPL-600/300-BL	492	436	520	434.5
PSN-FP/MPL-800/300-BL	692	636	720	634.5
PSN-FP/MPL-1000/300-BL**)	892	836	920	834.5
PSN-FP/MPL-1200/300-BL**)	1092	1036	1120	1034.5

**) for floor-standing cabinets only!

xEnergy Distribution Boards

Mounting kits for Energy Meters and various metering equipment

EP-502409_L

EP-502420_L

EP-502410_L

EP-502421_L

Width [mm]	Installation back frame or Mounting Side Wall (MSW) incl. meter plate type ZBR single or multiple use of meters depending on the module width Meter tray (height = 400 mm) RAL 7035 grey	DIN-rail set for meter tray to replace 2 or 3 meter sections with standard MCB modules	Mounting side wall (MSW) incl. meter plate type ZBR single or multiple use of meters depending on the module width Meter tray (height = 425 mm) RAL 7035 grey	DIN-rail set for meter tray to replace 2 or 3 meter sections standard MCB modules
Mounting kits for Energy Meters and various metering equipment				
400	**PSN-MT-400/400-1ZBR** EP-502407	-	**PSN-MT-400/425-1ZBR-MSW** EP-502408	-
600	**PSN-MT-600/400-2ZBR** EP-502409	-	**PSN-MT-600/425-2ZBR-MSW** EP-502410	-
800	**PSN-MT-800/400-3ZBR** EP-502411	-	**PSN-MT-800/425-3ZBR-MSW** EP-502412	-
1000	**PSN-MT-1000/400-4ZBR** EP-502413	**PSN-DRS-MT-1000/400-2ZBR** EP-502420 (instead of 2x ZBR)	**PSN-MT-1000/425-4ZBR-MSW** EP-502414	**PSN-DRS-MT-1000/425-2ZBR-MSW** EP-502421 (instead of 2x ZBR)
1200	**PSN-MT-1200/400-5ZBR** EP-502415	**PSN-DRS-MT-1200/400-2ZBR** EP-502422 (instead of 2x ZBR) **PSN-DRS-MT-1200/400-3ZBR** EP-502424 (instead of 3x ZBR)	**PSN-MT-1200/400-5ZBR** EP-502415	**PSN-DRS-MT-1200/425-2ZBR-MSW** EP-502423 (instead of 2x ZBR) **PSN-DRS-MT-1200/425-3ZBR-MSW** EP-502425 (instead of 2x ZBR)

xEnergy Distribution Boards

Mounting kits for Energy Meters and various metering equipment

EP-502418_L

EP-502418_L

EP-502403_L

EP-502419_L

vt14918

Installation back frame or Mounting Side Wall (MSW) incl. meter plate type ZBR single or multiple use of meters depending on the module width Meter tray (height = 450 mm) RAL 7035 grey	Installation back frame or Mounting Side Wall (MSW) incl. meter plate type ZBR and additional space for MOK box for indirect measurement via CTs Meter tray (height = 600 mm) RAL 7035 grey	Installation back frame or Mounting Side Wall (MSW) without meter plate prepared for mounting the energy meter directly on the board Meter tray (height = 400 mm) RAL 7035 grey	DIN-rail set for meter tray to replace a meter section with standard MCB modules (installation either left/right) RAL 7035 grey	Meter plate (optional) as add-on to all kind of mounting kits 370x210 mm (HxB) one plate for single meter installation
PSN-MT-400/450-1ZBR EP-504740	**PSN-MT/MOK-400/600-1ZBR** EP-502417	**PSN-MT-400/400-1** EP-502402		
PSN-MT-600/450-2ZBR EP-504741	**PSN-MT/MOK-600/600-2ZBR** EP-502418	**PSN-MT-600/400-2** EP-502403		
PSN-MT-800/450-3ZBR EP-504742	-	**PSN-MT-800/400-3** EP-502404		
PSN-MT-1000/450-4ZBR EP-504743	-	**PSN-MT-1000/400-4** EP-502405	**PSN-DRS-MT-X/400-1** EP-502419	**ZBR** 279261
PSN-MT-1200/450-5ZBR EP-504744	-	**PSN-MT-1200/400-5** EP-502406		

Meter trays, PSN-MT

- Meter trays for mounting meter directly or via meter plates ZBR
- Material: Sheet steel, powder-coated, RAL 7035
- Scope of delivery: 1 meter tray, fixing material

Openings for fixing onto rear frame in surface-mounted boards IP30 or for hanging in surface-mounted boards IP55 and floor-standing boards

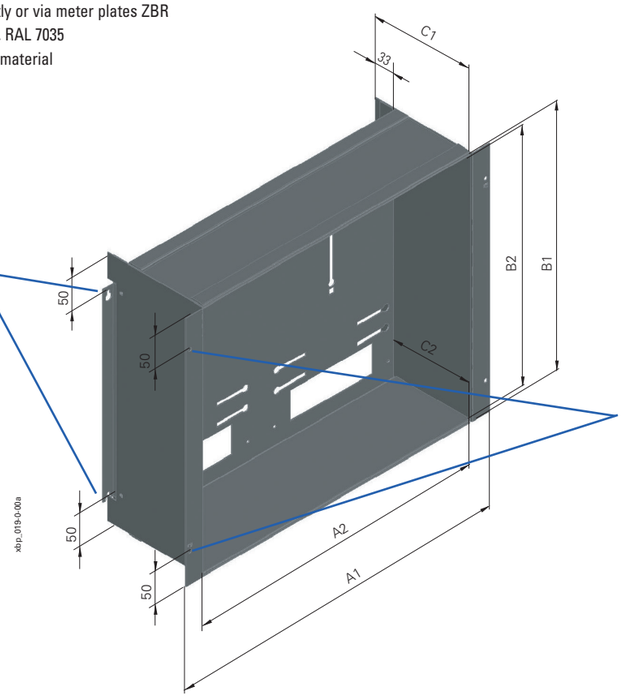

Openings for fixing onto side walls PSN-MSW or support PSN-FPS (if mounted without PSN-MSW into surface-mounted boards IP55 or floor-standing boards for which there is not access for rear mounting due to welded construction of the board)

Dimensions (mm)

Type	Outsider dimensions					
	Width	Height	Depth			
	A1	B1	C1	A2	B2	C2
PSN-MT-400/400-1	320	400	165	-	390	130
PSN-MT-600/400-2	520	400	165	459	390	130
PSN-MT-800/400-3	720	400	165	659	390	130
PSN-MT-1000/400-4	920	400	165	859	390	130
PSN-MT-1200/400-5	1120	400	165	1059	390	130

Mounting of meter plates ZBR into trays PSN-MT

- Meter plates ZBR are fixed with screws in the corners (in scope of delivery of the plates)

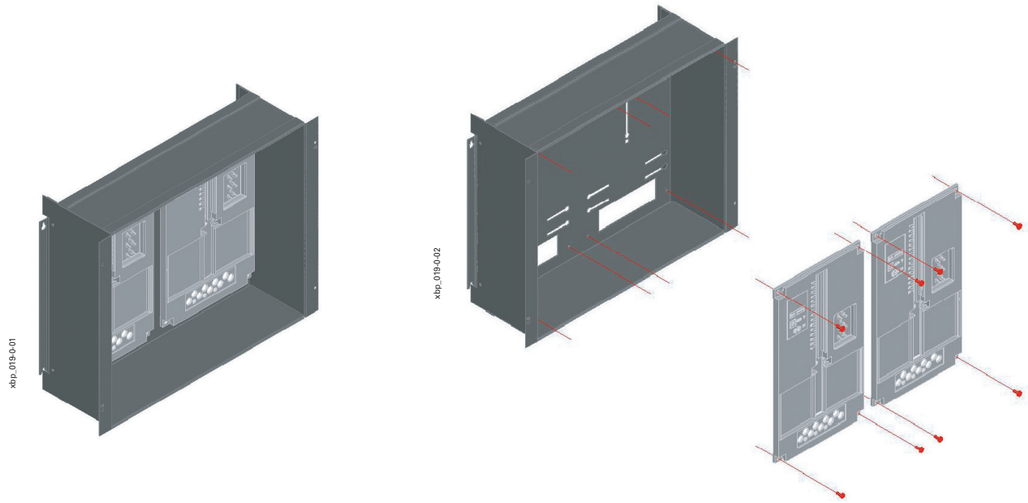

Application of meter through in a surface-mounted board IP30

- Tray is mounted directly onto rear frame
- Sealing screws for securing of the tray can be screwed into support PSN-FPS
- In case of use PSN-MSW, the through is fi xed via front part onto PSN-MSW (see application in flush-mounted board)
- Meter through has to be mounted into board before the side walls BP-SP

Attachment of the through onto rear mounting frame

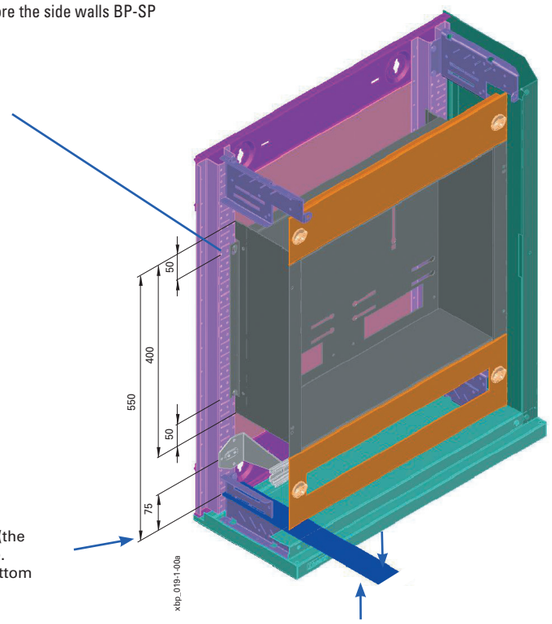

Zero position for mounting of device rails and mounting plates (the second opening from the bottom). Defines lower edge of the first bottom front plate. Standard height of the front plates is 150 mm.

Application of meter through in flush-mounted board or surface-mounted board IP54/IP55

- The tray is mounted onto side walls PSN-MSW or supports PSN-FPS
- If sealing is asked, standard screws are replaced with sealing ones
- Meter throughs can be mounted into flush-mounted boards with wall box of depth of 240 mm only
- Assembling into surface-mounted boards IP55 or floor-standing boards is carried in simmilar way. It is not possible to use rear mounting due to fixed side walls. For these cases, the through can be hanged onto rear frame. The fixing itself is performed from the front by means of screws screwed into PSN-MSW or PSN-FPS.

Fixing of the through on side wall PSN-MSW

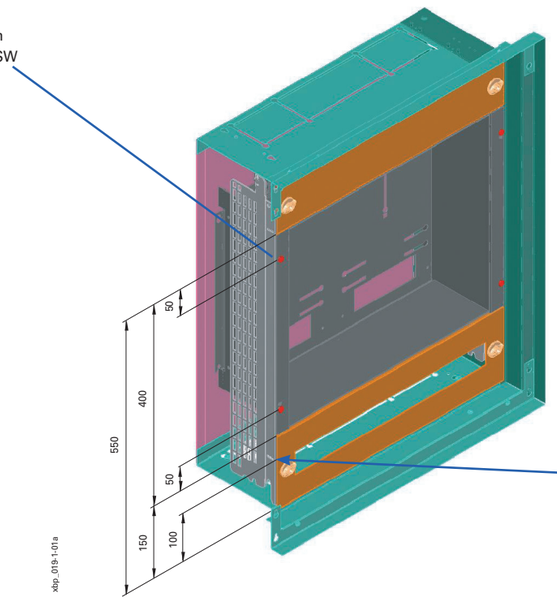

Side wall cutout defining height 100 mm

Device rail sets, PSN-DRS-MT

- For using free metering places with device rails
- Mounting is possible into side positions in the through
- Material: Sheet steel, powder-coated, RAL 7035
- Scope of delivery: 1 device rail set, fixing material

Dimensions (mm)

Type	Outside dimensions						
	Width	Height	Depth				
	A1	B	C2	A2	B1	B2	C3
PSN-DRS-MT-X/400-1	215	400	130	170	100	200	65

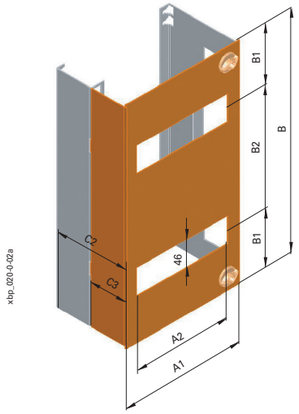

Assembling into meter through

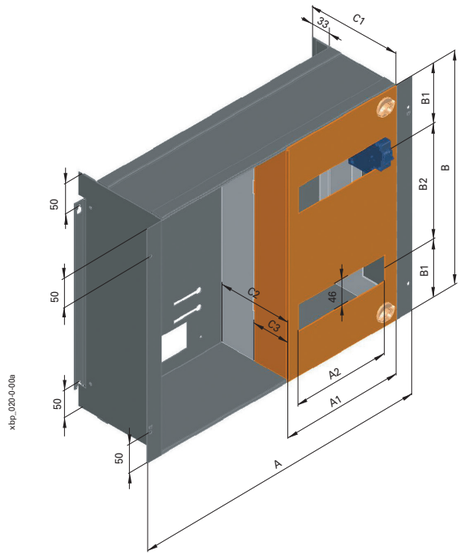

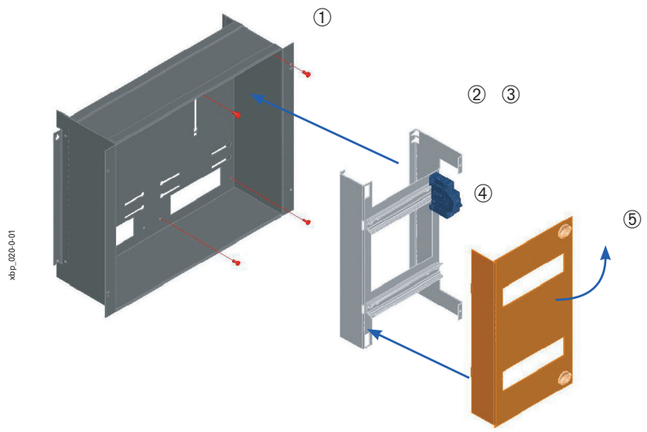

Mounting process:

1. Pre-screwing of fixing screws into meter through. The screws must not be screwed tight.
2. Placing of the device rail set onto pre-screwed screws.
3. Tightening of the fixing screws.
4. Potential installation or connecting of inside equipment.
5. Mounting of a front panel

193170_LDO, 293313_LDO, 501316_LDO1

Distribution Boards

Distribution Boards

• **Chapter 0**
Table of Contents ..... Page 3

• **Chapter 1**
Field distribution boards protection class II ..... Page 4
1.1 Surface-mounted field distribution board EWK-G.., IP31 ..... Page 5

• **Chapter 2**
Enclosures / switchgear cabinets for installation system EP in protection class I and II ..... Page 10
2.1 Surface-mounted and floor-standing distribution board EMC2-H.../55-W, IP55 ..... Page 11
2.2 Surface-mounted distribution board BP-0-...-EP-W, IP31 ..... Page 20
2.3 Surface-mounted distribution board BPM-0-...-EP, IP55 ..... Page 26
2.4 Floor-standing distribution board BPM-F-...-EP, IP55 ..... Page 29

• **Chapter 3**
EP installation system - standard modules / mounting kits ..... Page 34
3.1 EP installation system - standard modules / Fitting-kits, Width 250 mm ..... Page 36
3.2 EP installation system - standard modules / Fitting-kits, Width 500 mm ..... Page 40
3.3 EP installation system - standard modules / Fitting-kits, Width 750 mm ..... Page 44
3.4 EP installation system - standard modules / Fitting-kits, Technical data ..... Page 46

• **Chapter 4**
EP installation system - general accessories ..... Page 53

• **Chapter 5**
Enclosures / switchgear cabinets for installation system ProfiSNAP ..... Page 66
5.1 Surface-mounted distribution board BP-0-..., IP30 (pre-assembled) ..... Page 67
5.2 Surface-mounted distribution board BP-0-..., IP30 (flat-pack, grey) ..... Page 72
5.3 Surface-mounted distribution board BP-0-..., IP30 (flat-pack, white) ..... Page 74
5.4 Surface-mounted distribution board BPM-0-..., IP55 ..... Page 95
5.5 Flush-mounted distribution board BP(A/M)-U-3S-..., IP30/IP43/IP54 ..... Page 105
5.6 Floor-standing distribution board BP-F-..., IP30 ..... Page 119
5.7 Outdoor distribution board BP-VF/DZ..., IP44 ..... Page 130
5.8 Floor-standing distribution board BPM-F-..., IP55 ..... Page 137
5.9 Shared compartments inside distribution boards BP(M)-0, BP(M)-F ..... Page 149

• **Chapter 6**
ProfiSNAP installation system - components for interior fitting ..... Page 154
6.1 Front plates, blind and with 45mm cut-out for DIN-rail devices ..... Page 156
6.2 Mounting kits for Moulded Case Circuit Breaker ..... Page 164
6.3 Mounting kits for Fuse Switch Disconnectors ..... Page 182
6.4 Mounting kits for BZM, Dumeco and QSA ..... Page 188
6.5 Mounting kits for Earthing and Neutral conductors ..... Page 189
6.6 Mounting plates for universal fixing of different components ..... Page 192
6.7 Mounting kits for Energy Meters and various metering equipment ..... Page 200

• **Chapter 7**
ProfiSNAP installation system - general accessories ..... Page 207

• **Chapter 8**
General accessories xEnergy Basic ..... Page 228

• **Chapter 9**
Overall technical data xEnergy Basic ..... Page 248

• **Chapter 10**
Verification of temperature rise by testing - selection of reference examples ..... Page 253

	Description	Type Designation	Cat. No.	Units per package

Blanking Strip, BS-...-WH

- For all Eaton distribution bords

wa_vt10414, wa_vt10714

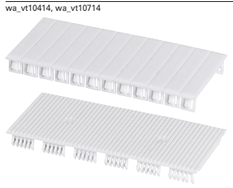

Blanking Strip, white, fine-ribbed, 12 MU	BS-12MF-WH	178975	10/100
Blanking Strip, grey, fine-ribbed, 12 MU	BS-12MF-GY	178980	10/100
Blanking Strip, white, fine-ribbed, 6 MU	BS-6MF-WH	178976	10/100
Blanking Strip, white, rough-ribbed, 12 MU	BS-12MB-WH	178977	10/100
Blanking Strip, grey, rough-ribbed, 12 MU	BS-12MB-GY	178979	10/100
Blanking Strip, white, rough-ribbed, 6 MU	BS-6MB-WH	178978	10/100

Blanking Strips

wa_vt07213

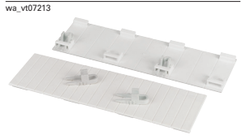

Blanking Strip, white, 2x 10 MU incl. wedges	AP-45	275410	2

wa_vt07313

Blanking Strip, grey, 1m long	NBP-1000	275413	1
Blanking Strip, white, 1m long	NBP-1000-W	101666	1

Front plate locking, BPZ-FPV / PSN-SNAP

- Spare part

VT01210

Single packaging (1 / 10)

Profi+ locking part	BPZ-FPV	120721	1
ProfiSNAP locking part	PSN-SNAP095/105-SP	EP-502485 *)	10

Bulk delivery (200 pcs. loose parts in the box)

Profi+ locking part	BPZ-FPV-E	180441 *)	200
ProfiSNAP locking part	PSN-SNAP095/105-BD	EP-502486 *)	200

*) Cat. No. and price per piece

Width (mm) / Height (mm) / MU

Blanking Strip for SASY 60i, AM-195/54

- Plastic cover for SASY 60i cut outs, RAL 7035
- To clip on and click onto place
- Possibility to shorten

sg13506

54 / 195 / 3	AM-195/45	107963	1

	Width (mm)	Type Designation	Cat. No.	Units per package

Sealing Angle, BPZ-PW-...

- Sealing angle for IP30 Surface-Mounting board
- Set includes 2 angles and 8 screws

vt01410

	BPZ-PW-ZVT	120764	1

Sealing Set, BPZ-SS (only for Profi+ setup)

- For sealing of front plates
- Set consists of 4 pcs. of sealing strips, 4 pcs. of sealing screws M5 and 1 pc. of taptite screw M5

vt11408

	BPZ-SS	116652	1

Sealing Screw to seal meter tray, BPZ-S (only for Profi+ setup)

- Sealing screw individually

wa_vt10914

	BPZ-S	120765	1

Cable Strain Relief C-Profile, BPZ-KAS

- Mounting on the base frame

wa_vt08913

400	BPZ-KAS-400	106440	1
600	BPZ-KAS-600	106441	1
800	BPZ-KAS-800	106442	1
1000	BPZ-KAS-1000	106443	1
1200	BPZ-KAS-1200	106444	1

	Cable Ø (mm)	Type Designation	Cat. No.	Units per package

Cable Clamps, NWS-K/AC

- Mounting onto BPZ-KAS

wa_nt09013

12-16	NWS-K/AC16	255197	1
16-20	NWS-K/AC20	255198	1
20-24	NWS-K/AC24	255199	1
24-28	NWS-K/AC28	255200	1
36-40	NWS-K/AC40	255201	1
48-52	NWS-K/AC52	255202	1

	Terminal Points / Description	Type Designation	Cat. No.	Units per package
	Terminal Supports, KT			
vt01705	horizontal	KT-3	275445	1
vt01805	vertical	KT-5	275447	1
	Terminal Strips, KL			
vt28015	4	KL-4	219723	1
	7	KL-7	219724	1
	11	KL-11	219725	1
	15	KL-15	219726	1
	25	KL-25	219727	1
	29	KL-29	275449	1
	45	KL-45	275450	1
	60	KL-60	275451	1
	76	KL-76	102066	1
	1 meter	KLM	275452	1
vt24715	Connection terminal for 35 mm²	KLA	275453	1

	Width x Height x Depth (mm) / Version	Type Designation	Cat. No.	Units per package
	Holder for Terminal Carrier, BPZ-KTH-KSK-F1(-F2)			
	• Holder for combination plug-in terminal KSK using terminal carrier • For mounting on terminal support bar BPZ-TSB • To be used in combination with terminal carrier empty KSK-KLV or equipped			
vt28117 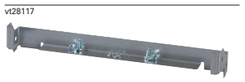	244 x 26 x 33 / single-storied	BPZ-KTH-KSK-F1	190041	1
	244 x 40 x 55 / two-storied	BPZ-KTH-KSK-F2	190042	1
	Terminal Carrier empty, KSK-KLV			
	• For mounting of the combined plug-type terminal KSK			
vt119114	up to 4x KSK-N and/or 4x KSK-PE	KSK-KLV	178905	1/10

	Can be used for	Description	Type Designation	Cat. No.	Units per package
	Additional equipment/spare parts for terminal equipment				
	• Combined plug-type terminal with plug-in terminal points for 0.5-4 mm² round conductors and screw-type terminal points for 2.5-25 mm² round conductors • Terminal carriers KSK-KLV can be expanded by up to 4 individual N blocks for separate RCD protective circuits, or by additional PE blocks • Terminal carriers are easy to snap on without any tools • Finger proof IP2X				
	Equipped combined plug-type terminal KSK				
vt118414 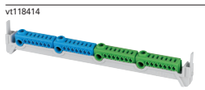	1x N potential 1x PE potential	N/PE comb. plug-type terminal 2x 2.5 - 25 mm² each and 14x 0.5 - 4 mm² each	KSK-2N/2PE-KLV	178898	1
vt118514 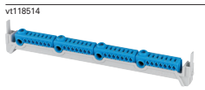	1x N potential	N comb. plug-type terminal 4x 2.5 - 25 mm² and 28x 0.5 - 4 mm²	KSK-4N-KLV	178899	1
vt118614 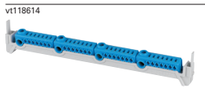	2x N potential	N/N comb. plug-type terminal 4x 2.5 - 25 mm² and 28x 0.5 - 4 mm²	KSK-3N/1N-KLV	178900	1
vt118714 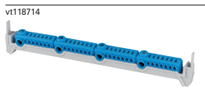	2x N potential	N/N comb. plug-type terminal 4x 2.5 - 25 mm² and 28x 0.5-4 mm²	KSK-2N/2N-KLV	178901	1
vt118814 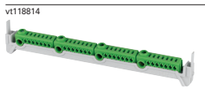	1x PE potential	PE comb. plug-type terminal 4x 2.5 - 25 mm² and 28x 0.5 - 4 mm²	KSK-4PE-KLV	178902	1
	Individual combined plug-type terminal KSK				
vt119014	1x N potential	N comb. plug-type terminal 1x 2.5 - 25 mm² 7x 0.5 - 4 mm²	KSK-N	178903	1/10
vt118914	1x PE potential	PE comb. plug-type terminal 1x 2.5 - 25 mm² 7x 0.5 - 4 mm²	KSK-PE	178904	1/10

Set for front plate sealing, BPZ-SS

- Set for sealing of distribution boards
- Scope of delivery: 4 pcs of sealing strips, 4 pcs of sealing screws M5, 1 pc of tapping screw M5

Process of sealing of front plates

- Fixed point is given by properly mounted sealing strip
- Sealing screw M5

Process of sealing of meter through

- The through can be fixed from the front side into PSN-FPS or PSN-MSW by means of sealing screws M5 (included in the set). The tapping screw from the set is used to make thread.
- The sealing itself can be done with sealing strip of a neighbouring front plate or with pre-moulded lugs in the through.

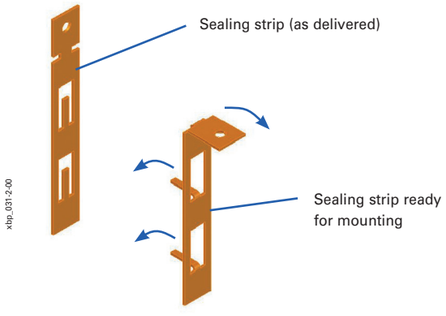

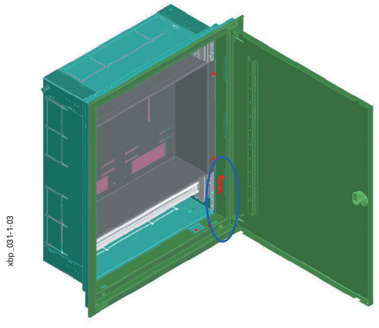

Detail

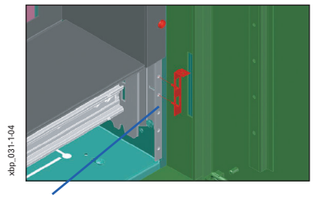

The sealing strip is put into one hole in the bend of side panel BP-SP (or in BPZMSW or PSN-FPS) before the mounting.

Detail

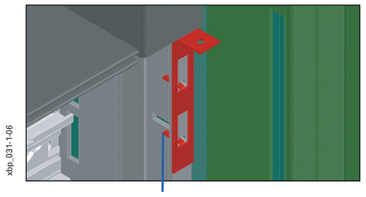

The strip is fixed by means of bent pins.

Detail

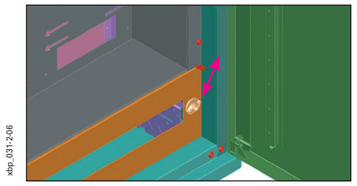

Assembling of the front plate. Self-earthing cap of the front plate, sealing strip and screw in the meter through are connected with the sealing wire.

Cable strain relief rail C-profile, BPZ-KAS

- The rail is used to provide strain relief to the cables right after cable entry
- Suitable for mounting cable clips
- Can be used in surface-mounted or floor-standing boards
- To be fixed with fastening angles right above cable entry
- Material: Sheet steel, galvanized
- Scope of delivery: 1 cable strain relief rail, 2 fastening angles, fixing material

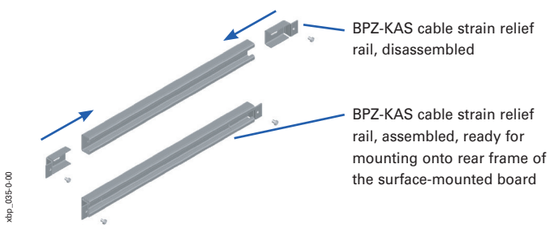

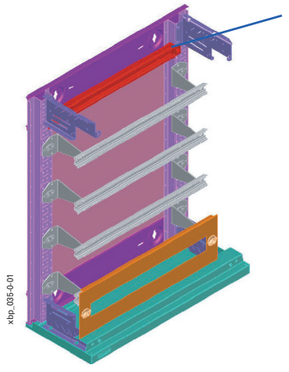

Cable strain relief rail BPZ-KAS mounted top/bottom inside surface m ounted boards right above cable entry. Cable clips (e.g. NWS-K/AC) should be assembled before rail is mounted.

Terminal support bars, BPZ-TSB

- For mounting of terminals (KLV-)KL
- For surface mounted or floor-standing boards
- Mounted directly on the corner tower sets BPZ-CTS (the mounting is recommended before tightening of the fixing screws of the corner tower set)
- Possibility of direct mounting of PE terminal (conductive connection with board construction)
- N terminals are mounted by means of KT holders
- Material: sheet steel, galvanized
- Scope of delivery: 1 terminal support bar, fixing material

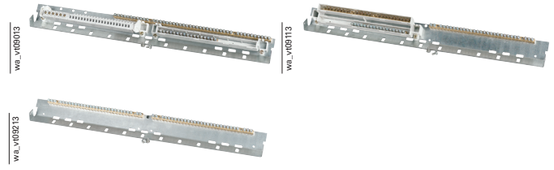

Terminal supports, KT

- Scope of delivery: 1 terminal support

KT-3

- For terminal strips KL-7 up to KL-60 mounted onto flat or hollow rails (2 pcs. needed)

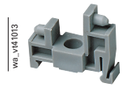

KT-5

- For terminal strips up to KL-15, for vertical snap-on mounting onto device rails according to IEC/EN 60715

Terminal strips, (KLV-)KL

- Maximum current 63 A (125 A if strip is fed into its center via KLA)
- Scope of delivery: 1 terminal strip

Type	Length [mm]	Number of terminals
KL-4	36	2 x 1.5-10 mm², 2 x 1.5-16 mm²
KL-7	57	6 x 1.5-10 mm², 1 x 1.5-16 mm²
KL-11	92	10 x 1.5-10 mm², 2 x 1.5-16 mm²
KL-15	120	14 x 1.5-10 mm², 2 x 1.5-16 mm²
KL-25	190	23 x 1.5-10 mm², 2 x 1.5-16 mm²
KL-29	218	27 x 1.5-10 mm², 2 x 1.5-16 mm²
KL-45	330	43 x 1.5-10 mm², 2 x 1.5-16 mm²
KL-60	442	58 x 1.5-10 mm², 2 x 1.5-16 mm²
KL-76	554	74 x 1.5-10 mm², 2 x 1.5-16 mm²
KLM	995	142 x 1.5-10 mm²
KLA	Connection terminal up to 35 mm² (instead of 2 terminal units up to 10 mm²)	

Possible variants of equipping of support bars BPZ-TSB with terminals (KLV-)KL

For board width 400 mm

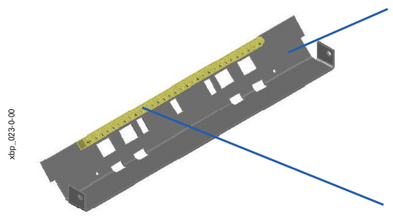

For board width 600 mm

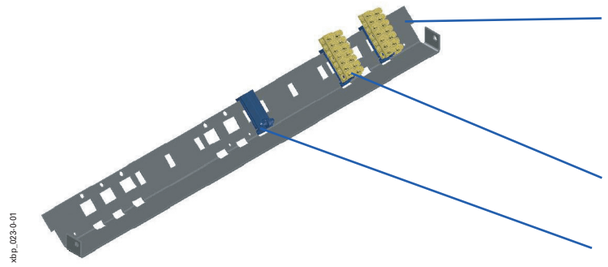

Possible variants of equipping of support bars BPZ-TSB with terminals (KLV-)KL

For board width 800 mm

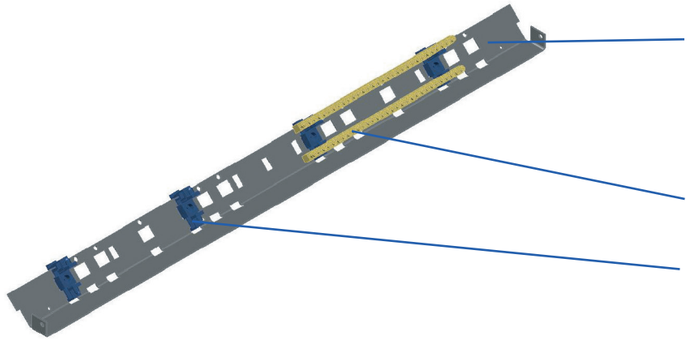

For board width 1000 mm

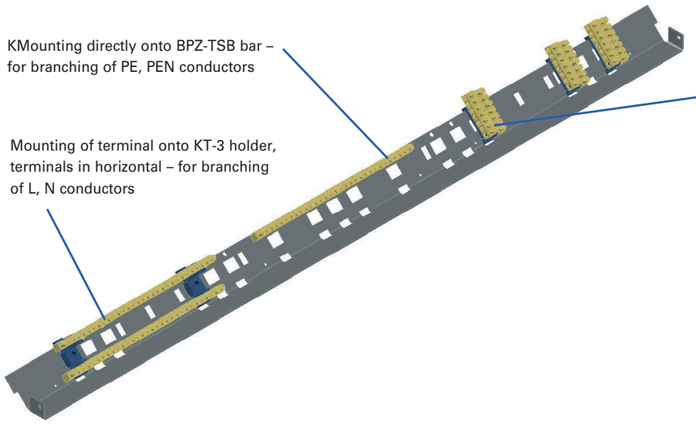

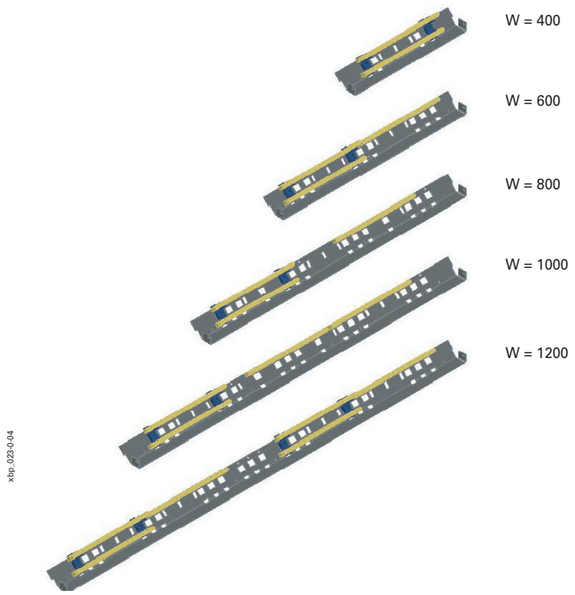

Mounting of L/N/PE terminals: standard combinations for different board widths

Placing of BPZ-TSB bar inside a board

- Suitable only for surface mounted or floor-standing boards

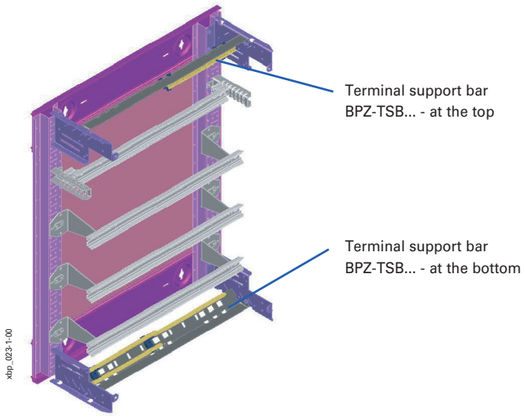

Detail

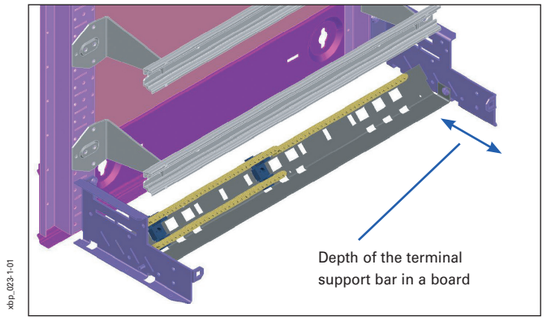

Profile

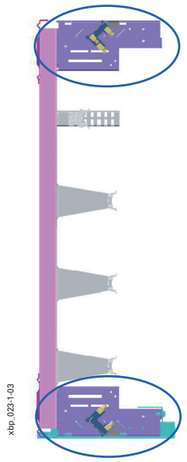

Detail

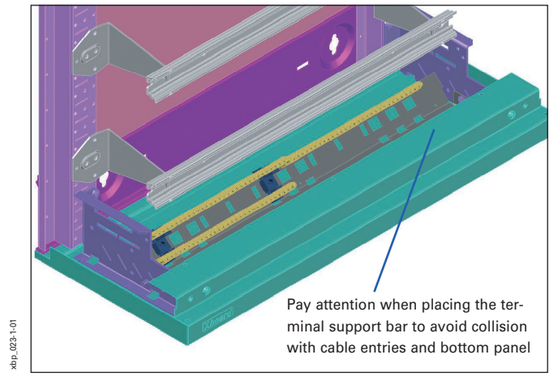

Detail 1 – Profile

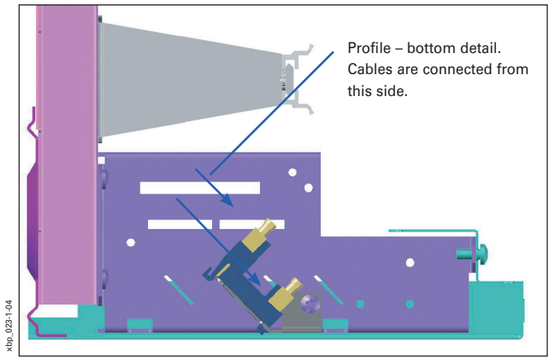

Detail 2 – Profile

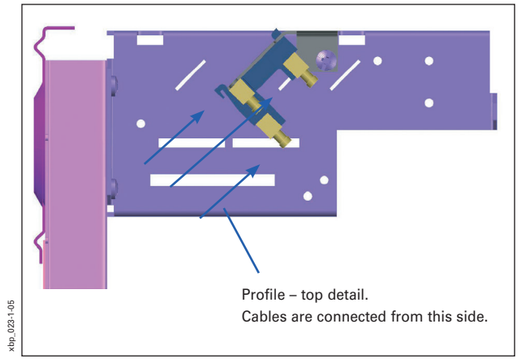

wa_vt01715

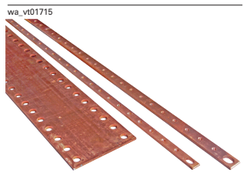

Height x Thickness x Length (mm) / Thread / Rated Current	Type Designation	Cat. No.	Units per package
Busbar with Thread, BPZ-BB/T			
15 x 5 x 1000 / M6 / 218 A	BPZ-BB/T-15/5/1000	289861	4
20 x 5 x 1000 / M6 / 274 A	BPZ-BB/T-20/5/1000	289862	4
32 x 5 x 1000 / M6 / 400 A	BPZ-BB/T-32/5/1000	289863	4
15 x 5 x 2000 / M6 / 218 A	BPZ-BB/T-15/5/2000	289864	4
20 x 5 x 2000 / M6 / 274 A	BPZ-BB/T-20/5/2000	289865	4
30 x 5 x 2000 / M6 / 379 A	BPZ-BB/T-30/5/2000	179498	4
30 x 10 x 1000 / M8 / 573 A	BPZ-BB/T-30/10/1000	289867	4

vt30614, vt30514

Rated Current (A) / Rail Dimensions (mm)	Type Designation	Cat. No.	Units per package
4 pole Busbar Support,, BPZ-BBS4			
160-250 / 15x5 and 20x5	BPZ-BBS-4/250	289868	10
160-630 / 15x5 up to 30x10	BPZ-BBS-4/630	289869	2

vt05115

Length x Width x Height (mm)	Type Designation	Cat. No.	Units per package
Protective Cover for BPZ-BBS-4/250 • Material: PVC			
800 x 160 x 25	BPZ-PC/BBS250/800-160-25	177326	1

vt36414

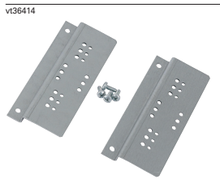

Width (mm)	Type Designation	Cat. No.	Units per package
Mounting elements for 4 pole Busbar Support 250 A • Pair • Horizontal mounting in the 200 mm compartment, vertical busbar			
200	BPZ-BR/BBS250/V-200	173652	1

vt05915

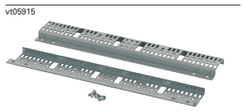

Width (mm)	Type Designation	Cat. No.	Units per package
Mounting elements for 4 pole Busbar Support 250/630 A • Pair • Horizontal mounting in the 400 mm compartment, vertical busbar • Also for use as cable strain relief rail			
400	BPZ-BR/BBS630/V-400	177325	1

wa_vt04913

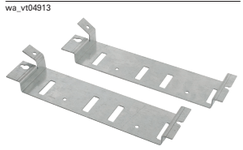

Width (mm) / MU	Description	Type Designation	Cat. No.	Units per package
Mounting elements for 4 pole Busbar Support 630 A, BPZ-BR/BBS630/V • Pair • Horizontal mounting in the 400 mm compartment, vertical busbar				
400		BPZ-BR/BBS630/V	104331	1

vt36314

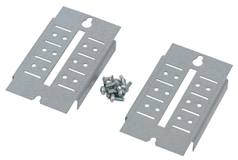

Mounting elements for DIN-Rail or DIN-Rail Set, BPZ-BR/DINR/V-200 • Pair • Horizontal mounting in the 200 mm compartment, vertical DIN-Rail • Mounting the DIN-Rail directly or adjustable with towers			
200	BPZ-BR/DINR/V-200	173651	1

vt15018

Aluminum Rail for vertical interior fittings, BPZ-MAH • Enable fixing of busbar support and other devices			
400	BPZ-MAH-400	154953	10
600	BPZ-MAH-600	154954	10
800	BPZ-MAH-800	154955	10
1000	BPZ-MAH-1000	154956	10
1200	BPZ-MAH-1200	154957	10

DIN-Rail Set, BPZ-DINR, Towers - adjustable

wa_vt51613

Width (mm) / MU	Description	Type Designation	Cat. No.	Units per package
400 / 13		BPZ-DINR13-400-T	286751	1/10
600 / 24		BPZ-DINR24-600-T	286753	1/10
800 / 35		BPZ-DINR35-800-T	286755	1/10
1000 / 46		BPZ-DINR46-1000-T	293590	1/10
1200 / 57		BPZ-DINR57-1200-T	293592	1/10

DIN-Rail Set, BPZ-DINR, Towers - fixed

- Protruding DIN-Rail cutted on both sides
- For better mounting of vertical cable ducts

wa_vt04014

400 / 13		BPZ-DINR13S-400-B	193981	1/10
600 / 24		BPZ-DINR24S-600-B	174384	1/10
800 / 35		BPZ-DINR35S-800-B	174385	1/10
1000 / 46		BPZ-DINR46S-1000-B	193982	1/10
1200 / 57		BPZ-DINR57S-1200-B	193983	1/10

Towers, BPZ-T

wa_vt08314, wa_vt61413

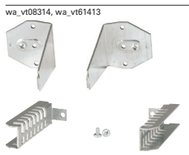

	fixed	BPZ-TF/2	116651	1 pair
	adjustable	BPZ-TA/2	116650	1 pair

DIN-Rail Set, BPZ-DINR, Towers - fixed, variant for cable guiding

- DIN-Rail 35 x 15 mm made of sheet metal incl. square hole pattern 9.5 x 9.5 mm
- For fixing of cable routing shackles type EPCL095-75X35

wa_vt04014

400 / 13		BPZ-DINR13P-400-B	302820	1/10
600 / 24		BPZ-DINR24P-600-B	302823	1/10
800 / 35		BPZ-DINR35P-800-B	302824	1/10
1000 / 46		BPZ-DINR46P-1000-B	302825	1/10
1200 / 57		BPZ-DINR57P-1200-B	302826	1/10

Fastening Elements, BEL

- BEL12: insulated, pre-mounted (grout screws)
- BEL01: for conductive connection, pre-mounted (grout screws)
- BEL12A: insulated, delivery in component parts

wa_nt19713

Pairs	white	BEL12	275199	1 pair
Pairs	green	BEL01	275200	1 pair
Pairs	white	BEL12A	275201	1 pair
200 pcs. loose parts in the box	white	BEL12-E	237837 *)	200 pcs.
200 pcs. loose parts in the box	green	BEL01-E	237836 *)	200 pcs.

*) Cat. No. and price per piece

C-Profil Rail for Cable Duct Angles, BPZ-CP

vt11008

Width (mm) / MU	Description	Type Designation	Cat. No.	Units per package
400		BPZ-CP-400	116918	10
600		BPZ-CP-600	116919	10
800		BPZ-CP-800	116920	10
1000		BPZ-CP-1000	116921	10
1200		BPZ-CP-1200	116922	10

Depth Extension Bracket for MSW-mounting, BPZ-TIW

vt106214

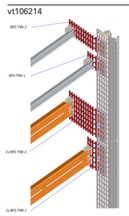

- For extension of the MSW in the depth
- TIW-1 used for all standard boards, TIW-2 exclusively for distribution boards with a depth of 400 mm (BP-F, BPM-F)
- The depth of the angle can be adjusted every 12 mm in the grid

Height (mm) / max depth (mm)	Type Designation	Cat. No.	Units per package
75 / 72	BPZ-TIW-1	EP-501199	1 Pair
75 / 172	BPZ-TIW-2	EP-501393	1 Pair

Support Plate, STL / Adapter, SAA

- For mounting LTS-00 type HRC load breakers in series onto mounting support rails of different heights
- For mounting of PE/PEN busbars and nonstandard components onto fastening elements BEL

wa_vt39713

Support plate (set of 2 pieces)	STL-1	275427	1
Support plate (set of 2 pieces)	STL-2	275428	1

wa_vt42813

Adapter (set of 4 pieces)	SAA	275429	1

DIN-Rail, BPZ-DINR

wa_vt51813

Width (mm) / MU	Type Designation	Cat. No.	Units per package
400 / 13	BPZ-DINR13-400	293594	10
600 / 24	BPZ-DINR24-600	293595	10
800 / 35	BPZ-DINR35-800	293596	10
1000 / 46	BPZ-DINR46-1000	293597	10
1200 / 57	BPZ-DINR57-1200	293598	10

DIN-Rail, BPZ-TSK

- DIN-Rail cutted on one side
- Enable fixing of vertical cable ducts on one side

vt106214

Width (mm) / MU Width (mm) / MU / for width of cable duct (mm)	Type Designation	Cat. No.	Units per package
600 / 23 / 40	BPZ-TSK-600/40	151166	10
600 / 22 / 60	BPZ-TSK-600/60	151167	10
600 / 21 / 80	BPZ-TSK-600/80	151168	10
800 / 34 / 40	BPZ-TSK-800/40	151169	10
800 / 33 / 60	BPZ-TSK-800/60	151170	10
800 / 32 / 80	BPZ-TSK-800/80	151171	10
1000 / 45 / 40	BPZ-TSK-1000/40	151172	10
1000 / 44 / 60	BPZ-TSK-1000/60	151173	10
1000 / 43 / 80	BPZ-TSK-1000/80	151174	10
1200 / 56 / 40	BPZ-TSK-1200/40	151175	10
1200 / 55 / 60	BPZ-TSK-1200/60	151176	10
1200 / 54 / 80	BPZ-TSK-1200/80	151177	10

Height (mm)	Type Designation	Cat. No.	Units per package

Cable Duct Angles, KKW

- For MSW mounting
- Enable fixing of vertical cable ducts
- KKW-40 for 60 mm cable ducts
- KKW-DIN for 80 mm cable ducts
- DIN-Rail has to be shortened

wa_vt39513

	KKW-40	275242	10 / 200
	KKW-DIN	275243	10 / 200

Fixing Material for Cable Duct, BPZ-CDB

- Mounting on main frame
- Enable fixing of vertical and horizontal cable ducts
- For boards of width 400, 600

wa_vt07013

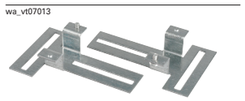

8	BPZ-CDB	102471	1
23	BPZ-CDB23	105216	1
58	BPZ-CDB58	109169	1

Fixing Material for Cable Duct C-Profile, BPZ-CDB../CP

- Mounting on main frame
- Enable fixing of vertical and horizontal cable ducts
- For boards of width 600, 800, 1000, 1200
- In combination with C-Profi l Rail BPZ-CP-...

vt11108

8	BPZ-CDB8/CP	116915	1
23	BPZ-CDB23/CP	116916	1
58	BPZ-CDB58/CP	116917	1

- For better mounting of vertical cable ducts
- In combination with DIN-Rail Set BPZ-DINR..S-...-B (DIN-Rail shortened)

vt106614, vt106514

BPZ-CDB08/CP

8	BPZ-CDB08/CP	174386	1
49	BPZ-CDB49/CP	174387	1

Width (mm)	Description	Type Designation	Cat. No.	Units per package

Accessories for Cable Duct Fixing, BPZ-ZP

- For direct mounting of the cable duct at the C-profile rail (ZP2) or to the mounting elements BPZ-CDB... (ZP1)

wa_vt04916, wa_vt05016

	100 pcs. in bag	BPZ-ZP1	184980	1
	50 pcs. in bag	BPZ-ZP2	184981	1

Busbar with Thread, BPZ-BB/T

- Scope of delivery: 4 Busbars (art. no. is created as 1 piece)

Dimensions (mm)

Type	L	S	P	L1	ØM	N°	Rated current (A) (Busbar temperature 65°C)
BPZ-BB/T-15/5/1000	15	5	25	1000	M6	39x	218
BPZ-BB/T-20/5/1000	20	5	25	1000	M6	39x	274
BPZ-BB/T-32/5/1000	32	5	25	1000	M6	39x	400
BPZ-BB/T-15/5/2000	15	5	25	2000	M6	79x	218
BPZ-BB/T-20/5/2000	20	5	25	2000	M6	79x	274
BPZ-BB/T-30/5/2000	30	5	25	2000	M6	79x	379
BPZ-BB/T-30/10/1000	30	10	25	1000	M8	39x	573

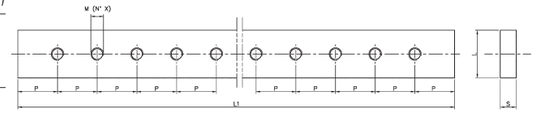

4-pole Busbar Support, BPZ-BBS-4/250

- Rated current 150-250 A
- Mounting position: vertical, horizontal
- For busbars featuring threads M6, 15 x 5 and 20 x 5 mm
- Material: PA66 reinforced with 30% glass fiber
- Flame resistance: self-extinguishing acc. to UL94/V-0
- Halogen free: Yes
- Compact construction
- Holes for fixing with M6 screws
- Easy to mount onto a mounting plate or special prepared brackets
- Additional fixing of protective cover BPZ-PC/BBS250/800-160-25
- Continuous operating temperature: +130°C
- Max. distance between the busbar supports in mm in case of one busbar per phase
- Scope of delivery: 1 busbar holder, 2 spacers, fixing material

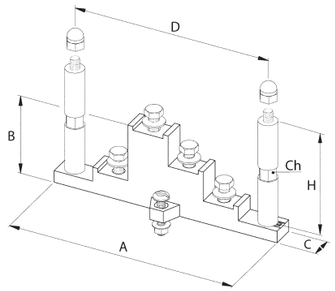

Bar cross section	Icc pk (kA) Icc rms (kA) In (A)	11 7 Distance (mm)	14 8	24 12	32 15
15 x 5	150	561	455	258	150
20 x 5	250	647	526	266	150

A	B	C	D	H	Ch
mm	mm	mm	mm	mm	mm
150	54	16	130	70	10

4-pole Busbar Support, BPZ-BBS-4/630

- Rated current 150-630 A
- Mounting position: vertical, horizontal
- For busbars featuring threads M6, 15 x 5, 20 x 5, 32 x 5, 30 x 5 and 30 x 10 mm
- Material: PA66 reinforced with 35 % glass fiber
- Flame resistance: self-extinguishing acc. to UL94/V-0
- Halogen free: Yes
- Compact construction
- Easy to mount onto a DIN-rail, onto a mounting plate or special prepared brackets
- Protective cover (not part of delivery) can be adjusted in height thanks to incl. plastic spacers
- Continuous operating temperature: +125°C
- Max. distance between the busbar supports in mm in case of one busbar per phase
- Scope of delivery: 1 busbar holder, fi xing material

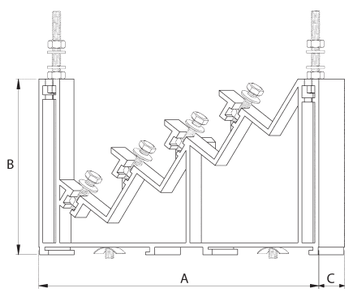

Bar cross section	Icc pk (kA) Icc rms (kA) In (A)	11 7 Distance (mm)	14 8	24 12	32 15	48 23
15x5	150	682	554	314	250	100
20x5	250	788	640	363	261	100
32x5	400	980	980	410	261	100
20x10	500	980	980	410	261	100
30x10	630	980	980	410	261	100

A	B	C
mm	mm	mm
215	112	34

Mounting elements for 4 pole Busbar Support 250 A, BPZ-BR/BBS250/V-200

- For horizontal mounting of the 4-pole Busbar Support BPZ-BBS-4/250 onto mounting pillars of a 200 mm wide compartment. Busbars are in vertical direction.
- Material: Sheet steel (2 mm), zinc-coated
- Scope of delivery: 2 Mounting elements, fixing material

Mounting elements for 4-pole Busbar Support 630 A, BPZ-BR/BBS630/V

- For horizontal mounting of the 4-pole Busbar Support BPZ-BBS-4/630/V onto mounting pillars of a 400 mm wide enclosure (or a 400 mm wide compartment). Busbars are in vertical direction.
- Material: Sheet steel (2 mm), zinc-coated
- Scope of delivery: 2 Mounting elements, fixing material

Mounting elements for DIN-Rail respectively DIN-Rail Kit, BPZ-BR/DINR/V-200

- For vertical mounting of the DIN-Rail onto mounting pillars of a 200 mm wide compartment
- Material: Sheet steel (1.5 mm), zinc-coated
- Scope of delivery: 2 Mounting elements, fixing material

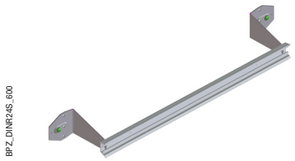

Device rail Set, BPZ-DINR

- For mounting of installation devices
- Number of modular units acc.to front plate cut-out, independent of type of fixing
- Fixed towers preferred for vertical routing via cable ducts

With adjustable mounting depth BPZ-DINR...T
- Scope of delivery: device rail, 2 adjustable towers, 2 BEL01 fastening elements, fixing material

With fixed mounting depth BPZ-DINR...B
- Scope of delivery: device rail, 2 fixed towers, fixing material
- Conductive connection is type tested

Towers for device rail, BPZ-T./2

- For mounting of device rails (without PSN-MSW)

With adjustable depth BPZ-TA/2
- Enables adjustable mounting depth of the DIN-Rail in steps of 12 mm
- Scope of delivery: 2 adjustable towers, fixing material

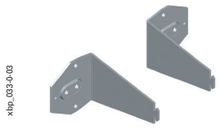

With fixed depth BPZ-TF/2
- Scope of delivery: 2 fixed towers, fixing material
- Conductive connection is type tested

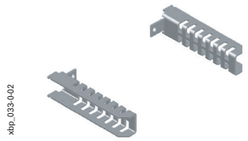

Fastening elements, BEL

- For mounting device rails onto adjustable towers BPZ-TA or onto mounting side walls PSN-MSW
- White BEL12 - ungrounded fastening element
- Green BEL01 - grounded fastening element
- Unmounted BEL12A - ungrounded and unmounted fastening element
- Scope of delivery: 2 fastening elements

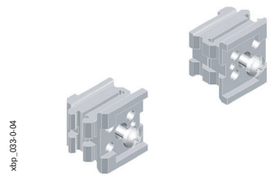

Adaptors, SAA, STL

- Adaptors SAA are intended to align the dip in BEL. With the adaptors, it is possible to mount panels and other equipment which is not designed for BEL onto these fastening elements.
- Holders STL can be used in the same way as SAA. These holders are enlarged by mounting extension.

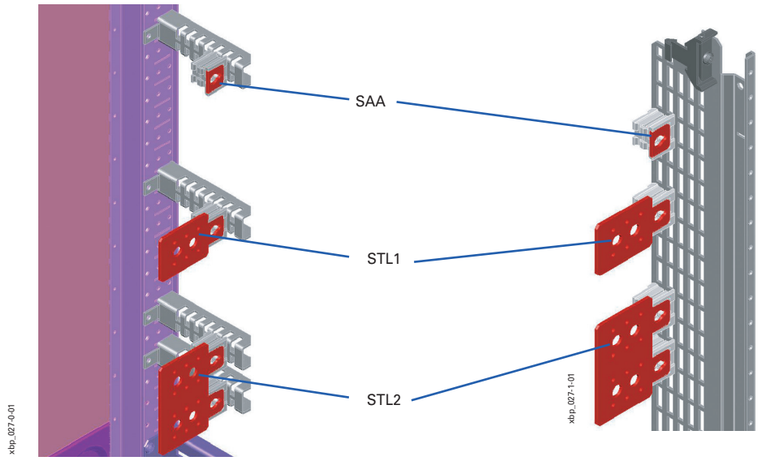

Depth extension bracket for MSW-mounting, BPZ-TIW

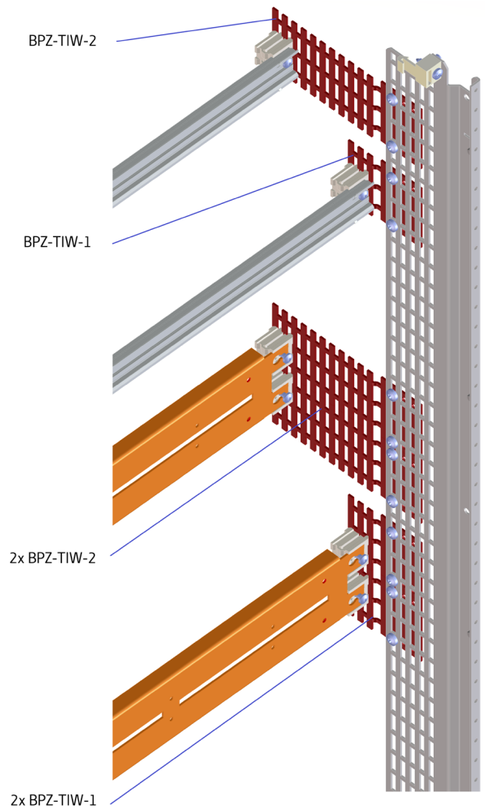

Device rails, BPZ-DINR

- For mounting of the Installation devices
- Material: Aluminium
- Scope of delivery: 1 device rail

Dimensions (mm)

Type	Outside dimensions		
	Height	Width A	Depth
BPZ-DINR13-400	35	288	15
BPZ-DINR24-600	35	488	15
BPZ-DINR35-800	35	688	15
BPZ-DINR46-1000	35	888	15
BPZ-DINR57-1200	35	1088	15

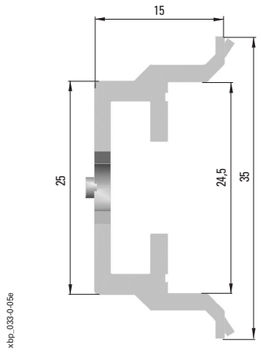

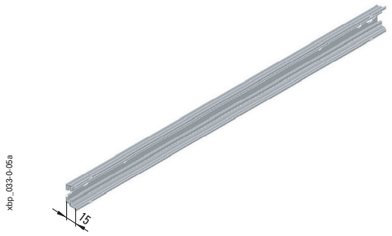

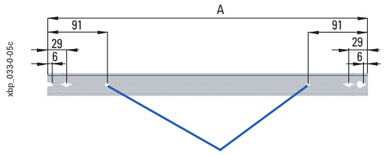

Holes for mounting of cable duct angles KKW

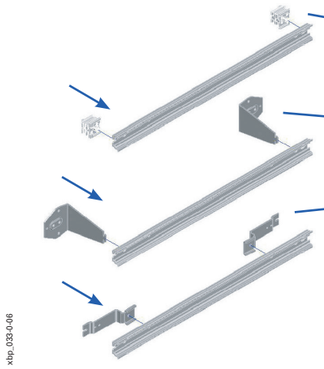

Fastening element BEL for mounting of rail onto tower BPZ-TA or side wall PSN-MSW.

Tower BPZ-TF for mounting of the rail onto rear frame.

Angle KKW-... for mounting of cable ducts (device rail has to be shortened according to width of the cable duct) – for details see applications of KKW angles

Detail of device rail profile

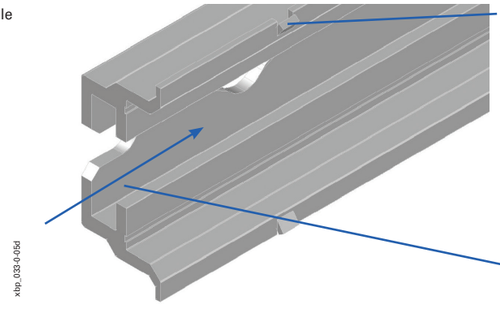

Stops defining active area of the rail which can be equipped with devices (with respect to cutout in the front plates BPZ-FP-...

The groove can be used for inserting of slide nuts EGM-4, EGM-5, or for EGM-F (in combination with EGM-4, EGM-5)

Device rails, BPZ-DINR

Reinforcement of the device rail

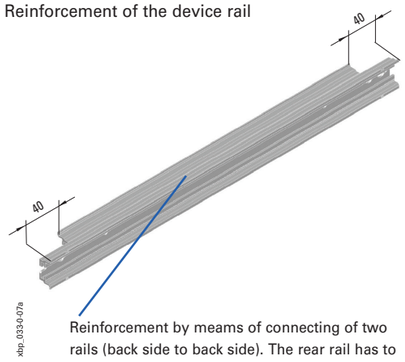

Reinforcement by meams of connecting of two rails (back side to back side). The rear rail has to be shortened by about 40 mm at both sides. For connecting, the pre-drilled holes can be used.

Detail

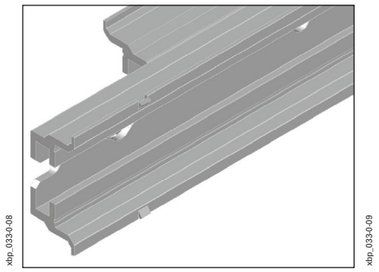

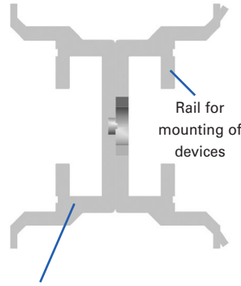

Cable duct angles, KKW

- For mounting cable ducts featuring a depth of 60 mm (KKW-40) or 80 mm (KKW-DIN)
- Material: Sheet steel, zinc-coated
- Scope of delivery: 1 cable duct angle

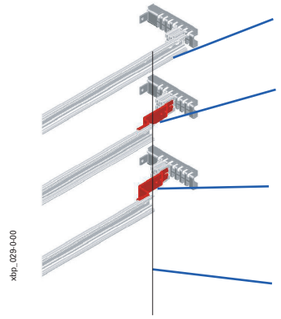

Standard (not shortened) device rail
Fixing element BEL in depth (2)

KKW-40
Mounting of cable ducts of depth of 60 mm
Fixing element BEL in depth (4)

KKW-DIN
Mounting of cable ducts of depth of 80 mm
Fixing element BEL in depth (5)

Length of the rail must be cut out according to width of the vertical cable duct. Maximum width of the cable duct is 80 mm.

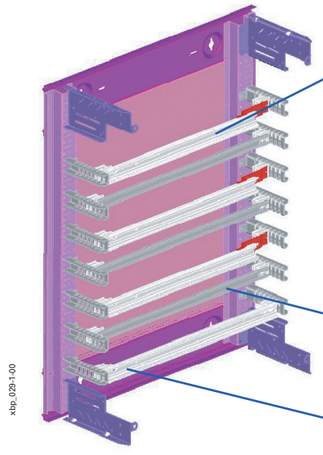

Shortened device rail with angle KKW-40 (for cable ducts of depth of 60 mm)
* Fixing element BEL in depth (2) on the left, in depth (4) on the right (at side with angle KKW).
Shortened device rail with angle KKW-DIN (for cable ducts of depth of 80 mm).
* Fixing element BEL in depth (2) on the left, in depth (5) on the right (at side with angle KKW).
Length of the rail must be cut out according to width of the vertical cable duct. Maximum width of the cable duct is 80 mm.

Rail BPZ-CP for mounting of horizontal cable duct
* Depth (4) (for cable duct of depth 60 mm)
* Depth (5) (for cable duct of depth 80 mm)

Standard length device rail in depth (2) (for mounting of modular devices)

Fixing elements for cable duct, BPZ-CDB

- For mounting cable ducts featuring a depth of 80 mm (BPZ-CDB), 60 mm (BPZ-CDB23) or 40 mm (BPZ-CDB58) for surface-mounted or floor-standing distribution boards
- For board width 400, 600 mm
- For larger widths fixing elements BPZ-CDB../CP are used
- Material: Sheet steel, zinc-coated
- Scope of delivery: 2 fixing elements, fixing material

Detail of mounting and applications

Cable duct fixing elements BPZ-CDB. Mounting onto rear frame (only for surface-mounted and floor-standing boards). A type is chosen according to height of the cable duct.

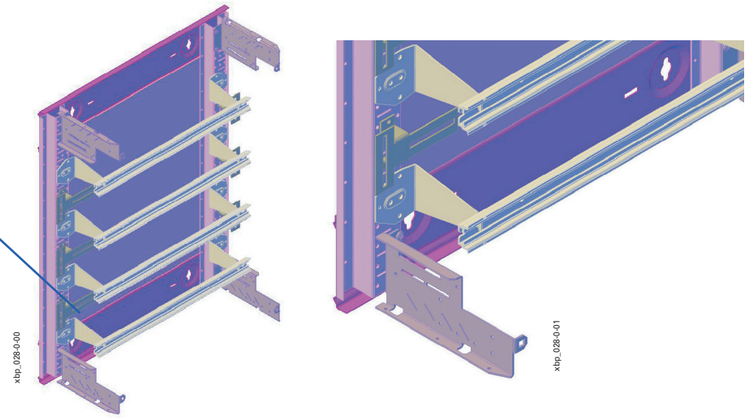

Fixing elements BPZ-CDB equipped with cable ducts (for board of width of 400, 600 mm)

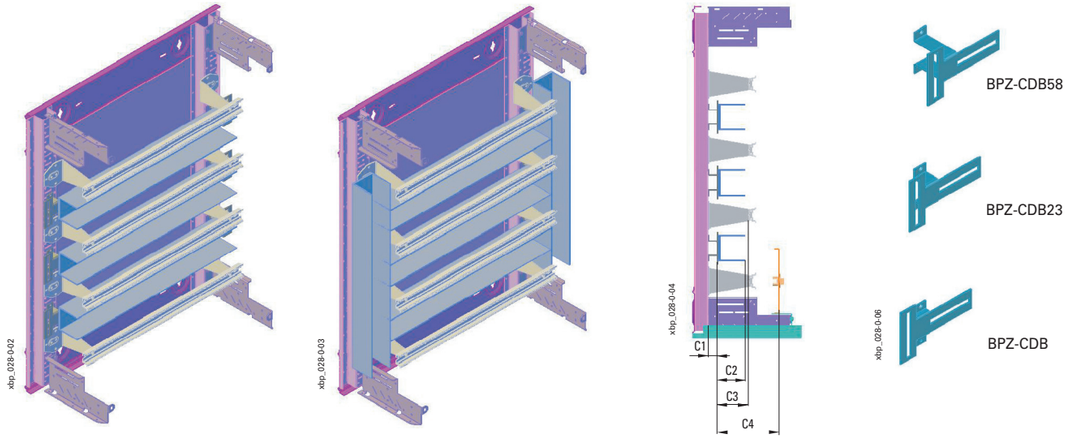

Dimensions (mm)

Type	Fixing element height	Recommended height of the cable duct	Maximum height of the vertical cable duct	Maximum height of the horizontal cable duct
	C1	C2	C3	C4
BPZ-CDB	8	80	85	150
BPZ-CDB23	23	60	70	135
BPZ-CDB58	58	40	40	100

Detail of mounting

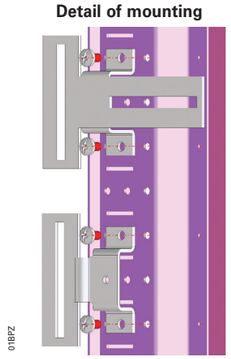

Fixing elements for cable duct, BPZ-CDB../CP

- For mounting cable ducts featuring a depth of 80 mm (BPZ-CDB8/CP respectively BPZ-CDB08/CP), 60 mm (BPZ-CDB23/CP) or 40 mm (BPZ-CDB49/CP respectively BPZ-CDB58/CP) for surface-mounted or floor-standing distribution boards
- For board with 600 to 1200 mm
- Fixing elements are supplemented with rails BPZ-CP
- Material: Sheet steel, zinc-coated
- Scope of delivery: 2 fixing elements, fixing material

Detail of mounting and application

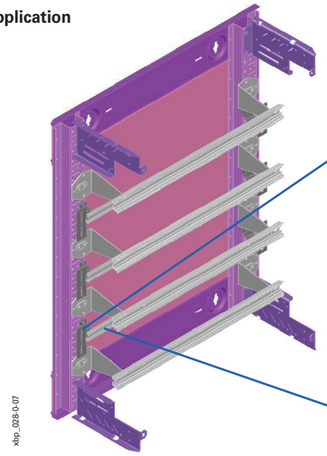

Fixing elements for cable ducts BPZ-CDB-...

Mounting onto rear frame (only for surface-mounted and floor-standing boards) for widths 800 mm and larger.

A type is chosen according to height of the cable duct. Cable duct is assembled onto C-profile rail which is mounted with the fixing element. An advantage – better mechanical stability of the cable duct.

C-profile rail BPZ-CP-...

Fixing elements BPZ-CDB equipped with cable ducts (for board of width of 800 to 1200 mm)

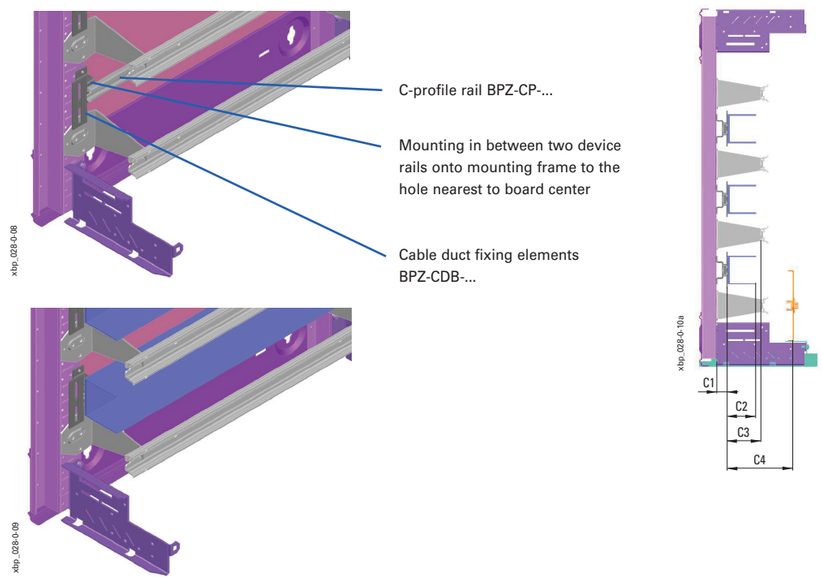

C-profile rail BPZ-CP-...

Mounting in between two device rails onto mounting frame to the hole nearest to board center

Cable duct fixing elements BPZ-CDB-...

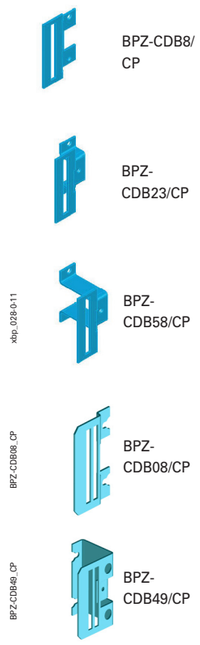

Dimensions (mm)

Type	Fixing element height	Recommended height of the cable duct	Maximum height of the vertical cable duct	Maximum height of the horizontal cable duct
	C1	C2	C3	C4
BPZ-CDB8/CP	7	80	85	150
BPZ-CDB08/CP	8	80	85	150
BPZ-CDB23/CP	24	60	70	135
BPZ-CDB49/CP	49	40	45	105
BPZ-CDB58/CP	54	40	40	100

193170_LDO, 293313_LDO, 501316_LDO1

Distribution Boards

Distribution Boards

• Chapter 0
Table of Contents ..... Page 3

• Chapter 1
Field distribution boards protection class II ..... Page 4
1.1 Surface-mounted field distribution board EWK-G.., IP31 ..... Page 5

• Chapter 2
Enclosures / switchgear cabinets for installation system EP in protection class I and II ..... Page 10
2.1 Surface-mounted and floor-standing distribution board EMC2-H.../55-W, IP55 ..... Page 11
2.2 Surface-mounted distribution board BP-0-...-EP-W, IP31 ..... Page 20
2.3 Surface-mounted distribution board BPM-0-...-EP, IP55 ..... Page 26
2.4 Floor-standing distribution board BPM-F-...-EP, IP55 ..... Page 29

• Chapter 3
EP installation system - standard modules / mounting kits ..... Page 34
3.1 EP installation system - standard modules / Fitting-kits, Width 250 mm ..... Page 36
3.2 EP installation system - standard modules / Fitting-kits, Width 500 mm ..... Page 40
3.3 EP installation system - standard modules / Fitting-kits, Width 750 mm ..... Page 44
3.4 EP installation system - standard modules / Fitting-kits, Technical data ..... Page 46

• Chapter 4
EP installation system - general accessories ..... Page 53

• Chapter 5
Enclosures / switchgear cabinets for installation system ProfiSNAP ..... Page 66
5.1 Surface-mounted distribution board BP-0-..., IP30 (pre-assembled) ..... Page 67
5.2 Surface-mounted distribution board BP-0-..., IP30 (flat-pack, grey) ..... Page 72
5.3 Surface-mounted distribution board BP-0-..., IP30 (flat-pack, white) ..... Page 74
5.4 Surface-mounted distribution board BPM-0-..., IP55 ..... Page 95
5.5 Flush-mounted distribution board BP(A/M)-U-3S-..., IP30/IP43/IP54 ..... Page 105
5.6 Floor-standing distribution board BP-F-..., IP30 ..... Page 119
5.7 Outdoor distribution board BP-VF/DZ..., IP44 ..... Page 130
5.8 Floor-standing distribution board BPM-F-..., IP55 ..... Page 137
5.9 Shared compartments inside distribution boards BP(M)-0, BP(M)-F ..... Page 149

• Chapter 6
ProfiSNAP installation system - components for interior fitting ..... Page 154
6.1 Front plates, blind and with 45mm cut-out for DIN-rail devices ..... Page 156
6.2 Mounting kits for Moulded Case Circuit Breaker ..... Page 164
6.3 Mounting kits for Fuse Switch Disconnectors ..... Page 182
6.4 Mounting kits for BZM, Dumeco and QSA ..... Page 188
6.5 Mounting kits for Earthing and Neutral conductors ..... Page 189
6.6 Mounting plates for universal fixing of different components ..... Page 192
6.7 Mounting kits for Energy Meters and various metering equipment ..... Page 200

• Chapter 7
ProfiSNAP installation system - general accessories ..... Page 207

• Chapter 8
General accessories xEnergy Basic ..... Page 228

• Chapter 9
Overall technical data xEnergy Basic ..... Page 248

• Chapter 10
Verification of temperature rise by testing - selection of reference examples ..... Page 253

System Overview

Power Distribution Blocks (distributor assembly terminal blocks)

- Prepared for reliable and fast connections inside the switchboard
- Installation on modular rail or mounting plate
- Screw-terminal connections

1-phase types

3-/4-phase types

4-phase busbar system (easy to connect)

- Connection to the vertical busbar from the back, outgoing distribution in the front
- Installation with special brackets or directly on mounting plate
- For 600 / 800 mm wide compartments
- Snap-in connections

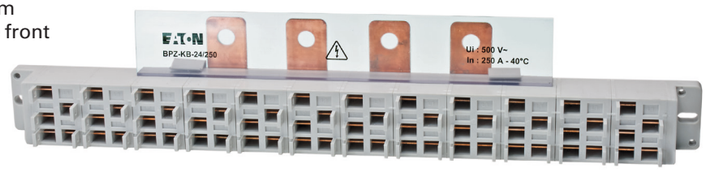

Modular busbar system SASY 60i

- 1- up to 5-phase systems realizable
- Prepared mounting kits for horizontal installation
- Vertical integration in separate compartment possible

Outputs L1/L2/L3 / N / Width (mm)	Type Designation	Cat. No.	Units per package

4 phase distribution busbar, BPZ-KB-12/250, BPZ-KB-24/250

- Prepared for a quick and easy wiring by means of plug-in contacts
- 63 A max. rated current per outlet

wa_vt04816, wa_vt16514

6 / 12 / 233	BPZ-KB-12/250	184977	1
12 / 24 / 422	BPZ-KB-24/250	289971	1

Fixing brackets for distribution busbar BPZ-KB-xx/250

- Suitable for mounting in the 400 mm (BPZ-KB-12/250) and 600/800 mm (BPZ-KB-24/250) wide compartment inside ProfiSNAP installation system (for EP separate brackets available)

vt28817

1 pair	BPZ-BR/KB24	102477	1

	Colour / Length	Type Designation	Cat. No.	Units per package

Flexible Connector for 4 phase Busbar, BPZ-P

vt18705

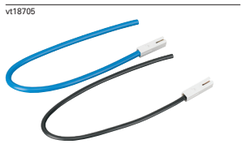

6 mm²	black / 120 mm	BPZ-P/L-6/120	102692	10
	blue / 120 mm	BPZ-P/N-6/120	102693	10
	black / 320 mm	BPZ-P/L-6/320	102696	10
	blue / 320 mm	BPZ-P/N-6/320	102697	10
10 mm²	black / 120 mm	BPZ-P/L-10/120	102694	10
	blue / 120 mm	BPZ-P/N-10/120	102695	10
	black / 320 mm	BPZ-P/L-10/320	102698	10
	blue / 320 mm	BPZ-P/N-10/320	102699	10

Cross section (mm²)	Type Designation	Cat. No.	Units per package

Connector with Insulated Crimp, BPZ-P/C

wa_vt15114, wa_vt15014, wa_vt15214

1.5 - 2.5	BPZ-P/C-1.5/2.5	178396	1
4 - 6	BPZ-P/C-4/6	102700	1
6 - 10	BPZ-P/C-6/10	178397	1

Rated current (A) / Output Terminals	Type Designation	Cat. No.	Units per package

1 pole Terminal Blocks, BPZ-KB

- Mounting onto DIN-rail and mounting plate

wa_vt16214, wa_vt15414, wa_vt16014

BPZ-KB-4/80 BPZ-KB-2/11/160 BPZ-KB-6/400

80 /6	BPZ-KB-4/80	289969	1
125 / 6	BPZ-KB-6/125	102714	1
125 / 8	BPZ-KB-2/8/125	178398	1
160 / 6	BPZ-KB-6/160	289970	1
160 / 11	BPZ-KB-2/11/160	178399	1
175 / 10	BPZ-KB-10/175	102715	1
250 / 11	BPZ-KB-11/250	289967	1
400 / 2	BPZ-KB-2/400	178401	1
400 / 6	BPZ-KB-6/400	178400	1
400 / 11	BPZ-KB-11/400	102713	1

- Mounting onto DIN-rail and mounting plate, type aluminium

wa_vt12914, wa_vt13414, wa_vt13814

BPZ-KB-6/80-ALU BPZ-KB-10/175-ALU BPZ-KB-2/400-ALU

wa_vt12914, wa_vt13414, wa_vt13314

BPZ-KB-11/400-ALU BPZ-KB-1/2/800-ALU BPZ-KB-2/1100-ALU

80 / 6	BPZ-KB-6/80-ALU	102702	1
125 / 6	BPZ-KB-6/125-ALU	102703	1
160 / 6	BPZ-KB-6/160-ALU	102704	1
175 / 1	BPZ-KB-1/175-ALU	102709	1
175 / 10	BPZ-KB-10/175-ALU	102707	1
250 / 11	BPZ-KB-11/250-ALU	102705	1
400 / 1	BPZ-KB-1/400-ALU	102710	1
400 / 2	BPZ-KB-2/400-ALU	178403	1
400 / 6	BPZ-KB-6/400-ALU	178402	1
400 / 11	BPZ-KB-11/400-ALU	102706	1
800 / 2	BPZ-KB-1/2/800-ALU	102712	1
800 / 2	BPZ-KB-2/2/800-ALU	102711	1
1100 / 2	BPZ-KB-2/1100-ALU	178404	1

Dimensions LxWxH (mm) / Suitable for	Type Designation	Cat. No.	Units per package

Terminal Link for 1 pole Terminal Block, BPZ-CL

wa_vt14714

7x65x25 / Art.-No. 289967	BPZ-CL-65/25	102720	10
9x70x30 / Art.-No. 102713	BPZ-CL-70/30	102721	10

Connection Bar 27 mm for 1 pole Terminal Block, BPZ-CB

wa_vt08313

16x44x14 / Art.-No. 102714	BPZ-CB-44/14	102722	10

	Rated current (A) / Inputs / Outputs	Type Designation	Cat. No.	Units per package
	3 pole Terminal Block, BPZ-KB/6/175			
	Mounting onto DIN-rail and mounting plate, type aluminium			
wa_vt13514	175 / 1 / 6	BPZ-KB-6/175	102717	1
	Mounting onto DIN-rail and mounting plate, type aluminium			
	175 / 1 / 6	BPZ-KB-6/175-ALU	102708	1
	4 pole Terminal Blocks, BPZ-KB			
wa_vt16114	125 / 1x(L1/L2/L3/N) / 7x(L1/L2/L3), 10xN	BPZ-KB-8/125	289968	1
	125	BPZ-KB-9/125	102718	1
	125	BPZ-KB-13/125	102719	1
wa_vt14314	160 / 1x(L1/L2/L3/N) / 11x(L1/L2/L3/N)	BPZ-KB-11/160	102716	1
WA_VT04921_R, WA_VT05121_R, WA_VT05221_R, WA_VT05321_R	100 / 7x per pole (either in- or output)	BPZ-KB-4-7/100	EP-500557	1
	125 / 12x per pole (either in- or output)	BPZ-KB-4-12/125	EP-500558	1
	125 / 15x per pole (either in- or output)	BPZ-KB-4-15/125	EP-500559	1
	160 / 12x per pole (either in- or output)	BPZ-KB-4-12/160	EP-500560	1

	Max. Rated current (A) / Cross section (mm²) / Number of connection points	Type Designation	Cat. No.	Units per package
	Compact distribution blocks BPZ-KC-…-ALU			
	Mounting onto DIN-rail For copper as well as aluminium conductors			
wa_vt03818, wa_vt03718, wa_vt03918	82 / 16 / 1	BPZ-KC-1/16-ALU	195327	10
	82 / 16 / 1	BPZ-KC-1/16N-ALU	195328	10
	82 / 16 / 1	BPZ-KC-1/16PE-ALU	195329	10
wa_vt04118, wa_vt04018, wa_vt04218	135 / 35 / 1	BPZ-KC-1/35-ALU	195330	10
	135 / 35 / 1	BPZ-KC-1/35N-ALU	195331	10
	135 / 35 / 1	BPZ-KC-1/35PE-ALU	195332	10
wa_vt05518, wa_vt05418, wa_vt05618	270 / 35 / 2	BPZ-KC-2/35-ALU	195333	10
	270 / 35 / 2	BPZ-KC-2/35N-ALU	195334	10
	270 / 35 / 2	BPZ-KC-2/35PE-ALU	195335	10
wa_vt04418, wa_vt04318, wa_vt04518,	160 / 50 / 1	BPZ-KC-1/50-ALU	195336	10
	160 / 50 / 1	BPZ-KC-1/50N-ALU	195337	10
	160 / 50 / 1	BPZ-KC-1/50PE-ALU	195338	10
wa_vt05818, wa_vt05718, wa_vt05918	320 / 50 / 2	BPZ-KC-2/50-ALU	195339	10
	320 / 50 / 2	BPZ-KC-2/50N-ALU	195340	10
	320 / 50 / 2	BPZ-KC-2/50PE-ALU	195342	10
wa_vt04718, wa_vt04618, wa_vt04818	250 / 95 / 1	BPZ-KC-1/95-ALU	195343	10
	250 / 95 / 1	BPZ-KC-1/95N-ALU	195344	10
	250 / 95 / 1	BPZ-KC-1/95PE-ALU	195345	10
wa_vt06118, wa_vt06018, wa_vt06218	500 / 95 / 2	BPZ-KC-2/95-ALU	195346	10
	500 / 95 / 2	BPZ-KC-2/95N-ALU	195347	10
	500 / 95 / 2	BPZ-KC-2/95PE-ALU	195348	10
wa_vt05018, wa_vt04918, wa_vt05118	320 / 150 / 1	BPZ-KC-1/150-ALU	195349	10
	320 / 150 / 1	BPZ-KC-1/150N-ALU	195350	10
	320 / 150 / 1	BPZ-KC-1/150PE-ALU	195351	10
wa_vt03618, wa_vt03518, wa_vt06318	640 / 150 / 2	BPZ-KC-2/150-ALU	195352	5
	640 / 150 / 2	BPZ-KC-2/150N-ALU	195353	5
	640 / 150 / 2	BPZ-KC-2/150PE-ALU	195354	5
wa_vt03418, wa_vt05218, wa_vt05318	425 / 240 / 1	BPZ-KC-1/240-ALU	195355	3
	425 / 240 / 1	BPZ-KC-1/240N-ALU	195356	3
	425 / 240 / 1	BPZ-KC-1/240PE-ALU	195357	3
wa_vt06518, wa_vt06418, wa_vt06618	850 / 240 / 2	BPZ-KC-2/240-ALU	195358	3
	850 / 240 / 2	BPZ-KC-2/240N-ALU	195359	3
	850 / 240 / 2	BPZ-KC-2/240PE-ALU	195360	3

Description	Type Designation	Cat. No.	Units per package

Wall mounting Bracket Set, for Floor Standing Board

- For IP30(IP31)/IP55 Floor Standing Board
- One set includes 2 wall-mounting angles plus mounting accessories

vt28610

	BPZ-WW	142474	1

Wall mounting Bracket Set, for Moisture Proof-Surface Mounting Installation Board

- For IP55 Surface Mounting Boards
- For fixing the enclosures on the wall
- Vertical or horizontal mounting
- One set includes 4 wall-mounting angles plus mounting accessories

vt03010

Zinc coated steel sheet 3 mm	WFB-SET-CS	112639	1
Bright stainless steel 2 mm	BP-VF/WFB-F-V2A	EP-505036	1

Lifting-Eye Bolt, BPZ-LE

vt1698

	BPZ-LE	286770	1

Flask with Brush Applicator, BPZ-CPS, PAINT-RAL

vt09405

RAL 7035, 30ml	BPZ-CPS-7035	286771	1
RAL 9016, 30ml	PAINT-RAL9016	288948	1

Cross section (mm2) / Lenght (mm)	Type Designation	Cat. No.	Units per package

Door Grounding Set, BFZ-DES

vt19305

6 / 300	BFZ-DES	101665	1

Fixing Material, EGM, KM-6

wa_vt38713

Fixing cage (set of 100 pieces)	EGM-F	275417	1
Slide nut M4 (set of 100 pieces)	EGM-4	275418	1
Slide nut M5 (set of 100 pieces)	EGM-5	275419	1

Description	Type Designation	Cat. No.	Units per package

Replacement Hinge, BPZ-MH

- Replacement for all IP43/IP44-Enclosures (type BPA-...) and IP54/IP55-Enclosures (type BPM-...)
- 1 hinge bracket incl. hinge pin

vt15518 EP-505040_L

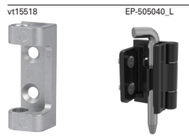

Spare part hinge for IP43 / IP54	BPZ-MH	166660	1
Spare part hinge for IP44 / IP55	BPZ-MH180	EP-505040	1

Thread / Lenght (mm)	Type Designation	Cat. No.	Units per package

Screws, BPZ-S-...

- M5x12 (standard screw of the board)
- M4x8 (flange plate)

wa_vt10103

M5 / 12	BPZ-S-M5x12	120719	20
M4 / 8	BPZ-S-M4x8	120720	20

Description	Type Designation	Cat. No.	Units per package

Locks, 61005

- Type SS-KS-61005: lock and key set 61005
- Number of locks required per door in the technic part!

wa_vt36813

Lock and key set 61005	SS-KS-61005	275422	1
Metal key 61005	MS-61005	275423	1
Plastic key 61005	KS-61005	275424	1

Replacement Clip-down Handle for standard half-cylinder length 40 mm

vt12108

1-point locking with tongue

Clip-down handle Softline short	BPZ-SH	116690	1
Clip-down handle Softline long	BPZ-SH-L-1P	187864	1

3-point locking with rod drive

Clip-down handle Softline long	BPZ-SH-L	131560	1

Clip-down Handle to retrofit for half-cylinder length 50 mm

vt15418

1-point locking with tongue	BPZ-SH-L-1P/OLU	187865	1
3-point locking with rod	BPZ-SH-L-3P/OLU	187866	1

Locks, BPZ-LOCK

- Replacement part for all enclosures with rotary door lock or dual-bit lock
- Number of locks required per door in the technic part!

For IP30(IP31)/IP54(IP55), Surface-Mounting and Floor-Standing Distribution Boards

vt12010

Dual-bit 3 mm inclusive 1 key	BPZ-LOCK/DBIT3	178405	1
Simultaneous lock cylinder inclusive 2 keys	BPZ-LOCK	102467	1

Ease-of-use Swing handle

- Swing handle suitable for standardized profile half-cylinders
- With integrated indication of lock position
- Available as a retro-fitting or complete set
- Handle made of high-grade shock-proof zinc die-casting
- Retrofit kit used in combination with BPZ-LOCK/DBIT3
- For standardized door cut-outs sized 22.5 x 20.4 mm
- Colour dusty grey RAL 7037, powder-coated
- Profile half-cylinder to be ordered separately

For IP30/IP55, Surface-Mounting and Floor-Standing Distribution Boards

vt12110

Retro-fitting set	PHZ-A-ADD-ON	133106	1

Description	Type Designation	Cat. No.	Units per package

Locks, BPZ-LOCK

For IP30, Surface-Mounting and Floor-Standing Distribution Boards, lock SH

vt11808

Lock SH6	BPZ-LOCK/SH6METAL	116913	1
Key SH6	BPZ-KEY/SH6	116674	1

For IP30, Surface-Mounting and Floor-Standing Distribution Boards, lock DH

vt11908

Lock DH	BPZ-LOCK/DHMETAL	116914	1
Key DH	BPZ-KEY/DH	116676	1

Profile Half-Cylinder for diverse Handles

- For rotary and clip-down ease-of-use handles
- Lock-cylinder finish according to DIN 18252 and DIN EN 1303
- Profile half-cylinder 10/30 with pin closures made of nickel silver
- 8-fold adjustable lock bit, 5 pairs of pins
- Identical or different locking
- Number of locks required per door in the technic part!

vt33610

1 Key included, keyed alike	BPZ-PHZ-E10/30-KA	EP-505041	1
3 Keys included, keyed different	PHZ-E10/30-VS	138575	1

Spare Key for Profile Half-Cylinder

- For profile half-cylinder PHZ-E...-GS

vt12510

Keyed alike	BPZ-KEY-E10/30-KA	EP-505042	1

No. of Photo / Version	Type Designation	Cat. No.	Units per package

Lock inserts for mounting in Clip-down handles

wa_nt08913 , vt11608, vt11708

1 7 mm square lock insert	NWS-SHE/4K/7	255306	1
2 8 mm square lock insert	NWS-SHE/4K/8	255307	1
3 7 mm triangular lock insert	NWS-SHE/3K/7	255304	1
4 8 mm triangular lock insert	NWS-SHE/3K/8	255305	1
5 Two-way key bit, 3 mm pin	NWS-SHE/DLB/DN3	255309	1
6 Two-way key bit, 5 mm pin	NWS-SHE/DLB/DN5	255310	1
7 Daimler-Benz insert	NWS-SHE/DB	255308	1
8 Screw driver-type insert	NWS-SHE/SZ	255311	1
9 Lock SH6	BPZ-LOCK/SH6	116673	1
10 Lock DH	BPZ-LOCK/DH	116675	1
- Z-Lock incl. 2 keys	BPZ-LOCK/Z	120766	1
- Volkswagen E1 insert	BPZ-LOCK/VW-E1	122693	1

Keys for Lock Inserts

N8299

1 7 mm square lock insert	NWS-SL/4K/7	255314	1
2 8 mm square lock insert	NWS-SL/4K/8	255315	1
3 7 mm triangular lock insert	NWS-SL/3K/7	255312	1
4 8 mm triangular lock insert	NWS-SL/3K/8	255313	1
5 Two-way key bit, 3 mm pin	NWS-SL/DLB/3	255317	1
6 Two-way key bit, 5 mm pin	NWS-SL/DLB/5	255318	1
7 Daimler-Benz	NWS-SL/DB	255316	1
- Key SH6	BPZ-KEY/SH6	116674	1
- Key DH	BPZ-KEY/DH	116676	1

Module units (MU)	Type Designation	Cat. No.	Units per package
Inscription Strip LAB-BAR			
13	LAB-BAR_13TE	107884	10
24	LAB-BAR_24TE	107901	10
35	LAB-BAR_35TE	107903	10
46	LAB-BAR_46TE	107906	10
57	LAB-BAR_57TE	107909	10

wa_vt14413

Length (m)	Type Designation	Cat. No.	Units per package
Holder for Inscription Strip universal, LAB-BAR			
1	LAB-BAR_1000	107911	10
3	LAB-BAR_3000	107912	10

wa_vt14413

Description	Type Designation	Cat. No.	Units per package
Accessories Inscription Strip LAB			
Enclosure leaves for the inscription strips, LAB-TAPE_A4			
empty	LAB-TAPE_A4_BLANK	107952	10
imprint	LAB-TAPE_A4_PRINT	107953	10

wa_vt14413

Circuit Diagram Bag, LAB-BAG_A4			
Size A4	LAB-BAG_A4	107913	1

wa_vt14513

XAB4 Circuit Diagram Box			
A4 panel format, self-adhesive	XAB4	283482	1

wa_vt08413

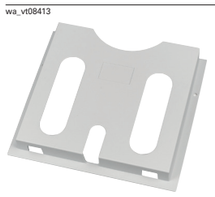

4-Phase Busbar, BPZ-KB-12/250, BPZ-KB-24/250

- It is a 250 A busbar intended to supply a row of modular devices
- Max. current rating for every output is 63 A
- Outputs: 6 or 12 outputs per phase, neutral wiring 12 or 24
- Each connector automatically locks, which guarantees high security
- No risk of direct contact, according to IP20
- Dimensions:
  BPZ-KB-12/250 (BxHxT) 232x40x50 mm
  BPZ-KB-24/250 (BxHxT) 422x40x50 mm
- Scope of delivery: 1 pc. 4-Phase busbar

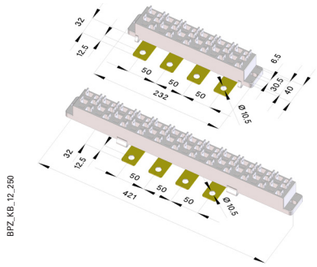

Mounting Elements for 4-Phase Busbar, BPZ-BR/KB24

- For mounting a 4-phase busbar onto an NZM-mounting plate or onto mounting pillars in back
- Material: Sheet steel, zinc-coated
- Scope of delivery: 2 Mounting elements, fixing material

Flexible Connector for 4-Phase Busbar, BPZ-P

- For connecting a 4-phase busbar
- In 6 mm² or 10 mm²
- Length: 120 or 320 mm
- Scope of delivery: 1 flexible connector

1-pole terminal block, BPZ-KB

- For copper conductors
- Mounting onto device rail and/or mounting plate
- UL-listed
- Time-saving on wiring
- Saves 80 % on space used
- Modular construction allowing to build systems of 1 to 4 poles by using several blocks
- Scope of delivery: 1 1-pole terminal block

Technical data

Type	Rated current	Degree of protection	Inputs (mm²)	Torque (Nm)	Outputs (mm²)	Torque (Nm)	Connection	Dimensions L x B x H (mm)
BPZ-KB-4/80	80 A	IP20	3x 2.5-25 (solid wire) 3x 2.5-16 (fine wire)	1.5 1.5	4x 2.5-6	0.8	-	65.5 x 27 x 47
BPZ-KB-6/125	125 A	IP20	1x 10-35 1x 2.5-25 (solid wire) 1x 2.5-16 (fine wire)	3.5 2 2	6x 2.5-16	2	-	74 x 27 x 46
BPZ-KB-2/8/125	125 A	IP10	2x 10-35 (solid wire) 2x 2.5-25 (solid wire) 2x 6-25 (fine wire) 2x 1.5-16 (fine wire)	8 2 8 2	6x 1.5-16 (solid wire) 6x 1.5-10 (fine wire)	2	-	91 x 27 x 51
BPZ-KB-6/160	160 A	IP20	1x 10-70 (solid wire) 1x 10-50 (fine wire)	4	6x 2.5-25 (solid wire) 6x 2.5-16 (fine wire)	2	Lateral parallel connection possible with Cu 16 x 5 mm	92 x 35 x 50
BPZ-KB-2/11/160	160 A	IP10	2x 25-70 (solid wire) 3x 2.5-25 (solid wire) 2x 16-50 (fine wire) 3x 1.5-16 (fine wire)	9 2 9 2	8x 1.5-16 (solid wire) 8x 1.5-10 (fine wire)	2 2	-	91 x 36 x 51
BPZ-KB-10/175	175 A	IP20	1x 10-70 (solid wire) 1x 10-50 (fine wire)	4	10x 2.5-16 (solid wire) 10x 2.5-10 (fine wire)	2	-	71 x 45 x 43
BPZ-KB-11/250	250 A	IP10	1x 35-120 (solid wire) 3x 35-95 (fine wire)	19	2x 2.5-35 (solid wire) 2x 2.5-25 (fine wire) 5x 2.5-16 4x 2.5-10	3.5 3.5 2 2	-	95.4 x 44.5 x 49

BPZ-KB-...-ALU

- For copper as well as aluminium conductors
- Mounting onto device rail and/or mounting plate
- UL-listed
- Time-saving on wiring
- Saves 80 % on space used
- Modular construction allowing to build systems of 1 to 4 poles by using several blocks
- Scope of delivery: 1 1-pole terminal block

Technical data

Type	Rated current	Degree of protection	Inputs (mm²)	Torque (Nm)	Outputs (mm²)	Torque (Nm)	Connection	Dimensions L x B x H (mm)
BPZ-KB-2/400	400 A	IP10	1x 95-240 (solid wire) 1x 70-185 (fine wire)	26	2x 50-120 (solid wire) 2x 35-95 (fine wire)	19	-	103 x 44.4 x 50
BPZ-KB-6/400	400 A	IP10	1x 95-240 (solid wire) 1x 70-185 (fine wire)	26	6x 10-50 (solid wire) 6x 6-35 (fine wire)	3.5	-	103 x 44.4 x 50
BPZ-KB-11/400	400 A	IP10	1x 95-185 (solid wire) 1x 95-150 (fine wire)	26	2x 2.5-35 (solid wire) 2x 2.5-25 (fine wire) 5x 2.5-16 4x 2.5-10	3.5 3.5 2 2	-	95.4 x 44.5 x 49
BPZ-KB-6/80-ALU	80 A (Cu) 63 A (Al)	IP20	3x 2.5-25 (solid wire) 3x 2.5-16 (fine wire)	1.5	4x 2.5-6	0.8	-	65.5 x 27 x 47
BPZ-KB-6/125-ALU	125 A (Cu) 100 A (Al)	IP20	1x 10-35 1x 2.5-25 (solid wire) 1x 2.5-16 (fine wire)	3.5 2 2	6x 2.5-16	2	-	74 x 27 x 46
BPZ-KB-6/160-ALU	160 A (Cu) 135 A (Al)	IP20	1x 10-70 (solid wire) 1x 10-50 (fine wire)	4	6x 2.5-25 (solid wire) 6x 2.5-16 (fine wire)	2	Lateral parallel connection possible with Cu 16 x 5 mm	92 x 35 x 50
BPZ-KB-1/175-ALU	175 A (Cu) 135 A (Al)	IP20	1x 2.5-70 (solid wire) 1x 2.5-50 (fine wire)	4	1x 2.5-70 (solid wire) 1x 2.5-50 (fine wire)	4	-	72.5 x 25.4 x 49.4
BPZ-KB-10/175-ALU	175 A (Cu) 135 A (Al)	IP20	1x 10-70 (solid wire) 1x 10-50 (fine wire)	4	10x 2.5-16 (solid wire) 10x 2.5-10 (fine wire)	2	-	71 x 45 x 43
BPZ-KB-11/250-ALU	250 A (Cu) 200 A (Al)	IP10	1x 35-120 (solid wire) 1x 35-95 (fine wire)	19	2x 2.5-35 (solid wire) 2x 2.5-25(fine wire) 5x 2.5-16 4x 2.5-10	3.5 3.5 2 2	-	95.4 x 44.5 x 49
BPZ-KB-1/400-ALU	400 A (Cu) 300 A (Al)	IP10	1x 35-240 (solid wire) 1x 16-185 (fine wire)	20	1x 35-240 (solid wire) 1x 16-185 (fine wire)	3.5 3.5 2 2	Lateral parallel connection possible with Cu 9 x 4 mm - max. 20 x 10 mm	145.5 x 39 x 80.5
BPZ-KB-2/400-ALU	400 A (Cu) 350 A (Al)	IP10	1x 95-240 (solid wire) 1x 70-185 (fine wire)	26	2x 50-120 (solid wire) 2x 35-95 (fine wire)	19	-	103 x 44.4 x 50
BPZ-KB-6/400-ALU	400 A (Cu) 350 A (Al)	IP10	1x 95-240 (solid wire) 1x 70-185 (fine wire)	26	6x 10-50 (solid wire) 6x 6-35 (fine wire)	3.5	-	103 x 44.4 x 50
BPZ-KB-11/400-ALU	400 A (Cu) 300 A (Al)	IP10	1x 95-185 (solid wire) 1x 95-150 (fine wire)	26	2x 2.5-35 (solid wire) 2x 2.5-25(fine wire) 5x 2.5-16 4x 2.5-10	3.5 3.5 2 2	-	95.4 x 44.5 x 49
BPZ-KB-1/2/800-ALU	800 A (Cu) 630 A (Al)	IP10	1x 35-300 (solid wire) 1x 25-240 (fine wire) 9 x 4mm - 50 x 10 mm Cu	25	1x 35-300 (solid wire) 1x 25-240 (fine wire)	25	Lateral parallel connection possible with Cu 9 x 4 mm - max. 24 x 10 mm	145 x 72 x 80.5
BPZ-KB-2/2/800-ALU	800 A (Cu) 630 A (Al)	IP10	2x 35-300 (solid wire) 2x 25-240 (fine wire) 9 x 4 mm - 24 x 10 mm Cu	25	2x 35-300 (solid wire) 2x 25-240 (fine wire) 9 x 4 mm - 24 x 10 mm Cu	25	-	145 x 72 x 80.5
BPZ-KB-2/1100-ALU	1100 A (Cu) 900 A (Al)	IP10	1x 95-500	80	2x 50-300 (solid wire) 1x 1.5-16 (solid wire) 2x 50-240 (solid wire) 1x 1.5-10 (fine wire)	50 3 50 3	-	202 x 90 x 107

Connection latch for 1-pole terminal block BPZ-CL

- BPZ-CL-65/25 suitable for BPZ-KB-11/250
- BPZ-CL-70/35 suitable for BPZ-KB-11/400
- Dimensions (LxBxH)
  BPZ-CL-65/25: 7 x 65 x 25 mm
  BPZ-CL-70/35: 9 x 70 x 30 mm
- Scope of delivery: 1 connection latch

Connection bar 27 mm for 1-pole terminal blocks BPZ-CB

- Suitable for BPZ-KB-6/125
- Dimensions (LxBxH): 16 x 44 x 14 mm
- Scope of delivery: 1 connection bar

3-pole Terminal Block BPZ-KB-6/175

- Mounting onto DIN-rail and mounting plate
- UL-listed
- Time-saving on wiring
- Saves 80% of space used
- Modular construction allowing to build systems of 1 to 4 poles by using several blocks
- Protection class: IP20
- Max. operating voltage 1000V AC, 1500V DC
- Scope of delivery: 1 3-pole terminal block

Technical data

	BPZ-KB-6/175	Torque (Nm)
Rated current	175 A	
Input (mm²)	1 x 16-70	6-10
Outputs (mm²)	6 x 2.5-16	3-4
Connection	–	
Dimensions L x B x H (mm)	80 x 71.5 x 42.5	

3-pole Terminal Block BPZ-KB-6/175-ALU

- Aluminium design
- Mounting onto DIN-rail and mounting plate
- UL-listed
- Time-saving on wiring
- Saves 80% of space used
- Modular construction allowing to build systems of 1 to 4 poles by using several blocks
- Protection class: IP20
- Max. operating voltage 1000V AC, 1500V DC
- Scope of delivery: 1 3-pole terminal block

Technical data

	BPZ-KB-6/175-ALU	Torque (Nm)
Rated current	175 A / 125 A	
Input (mm²)	1 x 16-70	6-10
Outputs (mm²)	6 x 2.5-16	3-4
Connection	–	
Dimensions L x B x H (mm)	80 x 71.5 x 42.5	

4-pole Terminal Blocks, BPZ-KB

- Mounting onto DIN-rail and mounting plate
- Max. operating voltage
  BPZ-KB-9/125: 690V AC/DC
  BPZ-KB-13/125: 690V AC/DC
  BPZ-KB-8/125: 1000C AC/1500V DC
  BPZ-KB-11/160: 1000C AC/1500V DC
- Scope of delivery: 1 4-pole terminal block

Technical data

	BPZ-KB-8/125	Torque (Nm)	BPZ-KB-9/125	Torque (Nm)	BPZ-KB-13/125	Torque (Nm)	BPZ-KB-11/160	Torque (Nm)
Rated current (Cu / Al)	125 A		125 A		125 A		160 A	
Input (mm²)	1 x 6-35	1.5	2 x 6-35	1.5	2 x 6-35	1.5	1 x 10-35	3.5-5
Outputs (mm²)	3-polig x (5 x 1.5-6 / 2 x 4-16)	0.8-1.5	7 x 2.5-10	1.5	9 x 1.5-10	1.5	3 x 6-35	3.5-5
Connection	1-polig x (4 x 1.5-10 / 6 x 4-16)	1.5			2 x1.5-10	1.5	3 x 6-25	3.5-5
Dimensions L x B x H (mm)	74.5 x 98 x 49		102 x 89 x 48		103 x 126 x 48		87 x 162 x 50	

Lifting-Eye Bolt, BPZ-LE

- For transporting the distribution board by crane, high-lift truck, etc.
- To be mounted onto the top of the floor-standing distribution board
- Max. static tensile force: 1400 N each, total 3800 N
- Weight: approx. 0.2 kg
- Scope of delivery: 4 Lifting-eye bolts

Flask with Brush Applicator, BPZ-CPS, PAINT-RAL

- For sanding scratches in RAL 7035, 9010 or 9016
- Scope of delivery: 1 flask with brush applicator

Compact distribution blocks BPZ-KC-…-ALU

- For copper as well as aluminium conductors
- Used as link between copper- and aluminum conductors
- Mounting onto device rail
- Degree of protection IP20 (finger-safe finish is guaranteed)
- Cross sections of connections 16 - 240 mm²
- Available as standard grey colour, with blue cover for Neutral and as PE-terminal in colour yellow/green (housing/cover)
- Scope of delivery: 1-pole distribution block acc.to MOQ (depending on frame size)

Technical data

Type	Rated current Cu / Al	Number Inputs / Outputs	Cross section mm² solid wire	fine wire with sleeve	Rated voltage	Colour	Dimensions L x B x H [mm]	Minimum order quantity (MOQ) [pcs.]
BPZ-KC-1/16-ALU	82 A / 75 A	1/1	1.5 - 16	1.5 - 10	1000 V AC/DC	Grey	45 x 14 x 40	10
BPZ-KC-1/16N-ALU	82 A / 75 A	1/1	1.5 - 16	1.5 - 10	1000 V AC/DC	Blue	45 x 14 x 40	10
BPZ-KC-1/16PE-ALU	82 A / 75 A	1/1	1.5 - 16	1.5 - 10	1000 V AC/DC	Yellow/Green	45 x 14 x 40	10
BPZ-KC-1/35-ALU	135 A / 120 A	1/1	2.5 - 35	2.5 - 25	1000 V AC/DC	Grey	46 x 16 x 40	10
BPZ-KC-1/35N-ALU	135 A / 120 A	1/1	2.5 - 35	2.5 - 25	1000 V AC/DC	Blue	46 x 16 x 40	10
BPZ-KC-1/35PE-ALU	135 A / 120 A	1/1	2.5 - 35	2.5 - 25	1000 V AC/DC	Yellow/Green	46 x 16 x 40	10
BPZ-KC-2/35-ALU	2x 135 A / 2x 120 A	2/2	2.5 - 35	2.5 - 25	1000 V AC/DC	Grey	46 x 27 x 40	10
BPZ-KC-2/35N-ALU	2x 135 A / 2x 120 A	2/2	2.5 - 35	2.5 - 25	1000 V AC/DC	Blue	46 x 27 x 40	10
BPZ-KC-2/35PE-ALU	2x 135 A / 2x 120 A	2/2	2.5 - 35	2.5 - 25	1000 V AC/DC	Yellow/Green	46 x 27 x 40	10
BPZ-KC-1/50-ALU	160 A / 145 A	1/1	2.5 - 50	2.5 - 35	1000 V AC/DC	Grey	49 x 18 x 43	10
BPZ-KC-1/50N-ALU	160 A / 145 A	1/1	2.5 - 50	2.5 - 35	1000 V AC/DC	Blue	49 x 18 x 43	10
BPZ-KC-1/50PE-ALU	160 A / 145 A	1/1	2.5 - 50	2.5 - 35	1000 V AC/DC	Yellow/Green	49 x 18 x 43	10
BPZ-KC-2/50-ALU	2x 160 A / 2x 145 A	2/2	2.5 - 50	2.5 - 35	1000 V AC/DC	Grey	49 x 30 x 43	10
BPZ-KC-2/50N-ALU	2x 160 A / 2x 145 A	2/2	2.5 - 50	2.5 - 35	1000 V AC/DC	Blue	49 x 30 x 43	10
BPZ-KC-2/50PE-ALU	2x 160 A / 2x 145 A	2/2	2.5 - 50	2.5 - 35	1000 V AC/DC	Yellow/Green	49 x 30 x 43	10
BPZ-KC-1/95-ALU	250 A / 220 A	1/1	6 - 95	6 - 70	1000 V AC/DC	Grey	84 x 24 x 51	10
BPZ-KC-1/95N-ALU	250 A / 220 A	1/1	6 - 95	6 - 70	1000 V AC/DC	Blue	84 x 24 x 51	10
BPZ-KC-1/95PE-ALU	250 A / 220 A	1/1	6 - 95	6 - 70	1000 V AC/DC	Yellow/Green	84 x 24 x 51	10
BPZ-KC-2/95-ALU	2x 250 A / 2x 220 A	2/2	6 - 95	6 - 70	1000 V AC/DC	Grey	84 x 41 x 51	10
BPZ-KC-2/95N-ALU	2x 250 A / 2x 220 A	2/2	6 - 95	6 - 70	1000 V AC/DC	Blue	84 x 41 x 51	10
BPZ-KC-2/95PE-ALU	2x 250 A / 2x 220 A	2/2	6 - 95	6 - 70	1000 V AC/DC	Yellow/Green	84 x 41 x 51	10
BPZ-KC-1/150-ALU	320 A / 290 A	1/1	25 - 150	25 - 120	1000 V AC/DC	Grey	84 x 30 x 54	10
BPZ-KC-1/150N-ALU	320 A / 290 A	1/1	25 - 150	25 - 120	1000 V AC/DC	Blue	84 x 30 x 54	10
BPZ-KC-1/150PE-ALU	320 A / 290 A	1/1	25 - 150	25 - 120	1000 V AC/DC	Yellow/Green	84 x 30 x 54	10
BPZ-KC-2/150-ALU	2x 320 A / 2x 290 A	2/2	25 - 150	25 - 120	1000 V AC/DC	Grey	84 x 50 x 54	5
BPZ-KC-2/150N-ALU	2x 320 A / 2x 290 A	2/2	25 - 150	25 - 120	1000 V AC/DC	Blue	84 x 50 x 54	5
BPZ-KC-2/150PE-ALU	2x 320 A / 2x 290 A	2/2	25 - 150	25 - 120	1000 V AC/DC	Yellow/Green	84 x 50 x 54	5
BPZ-KC-1/240-ALU	425 A / 380 A	1/1	35 - 240	35 - 185	1000 V AC/DC	Grey	106 x 36 x 65	3
BPZ-KC-1/240N-ALU	425 A / 380 A	1/1	35 - 240	35 - 185	1000 V AC/DC	Blue	106 x 36 x 65	3
BPZ-KC-1/240PE-ALU	425 A / 380 A	1/1	35 - 240	35 - 185	1000 V AC/DC	Yellow/Green	106 x 36 x 65	3
BPZ-KC-2/240-ALU	2x 425 A / 2x 380 A	2/2	35 - 240	35 - 185	1000 V AC/DC	Grey	106 x 59 x 65	3
BPZ-KC-2/240N-ALU	2x 425 A / 2x 380 A	2/2	35 - 240	35 - 185	1000 V AC/DC	Blue	106 x 59 x 65	3
BPZ-KC-2/240PE-ALU	2x 425 A / 2x 380 A	2/2	35 - 240	35 - 185	1000 V AC/DC	Yellow/Green	106 x 59 x 65	3

Door grounding set, BFZ-DES

- In scope of delivery of all ProfiSNAP doors
- For grounding the door
- Length: 300 mm
- Cross section: 6 mm2
- Scope of delivery: 1 grounding wire with pre-fitted eyelets, fixing material

Surface mounted boards BP-O

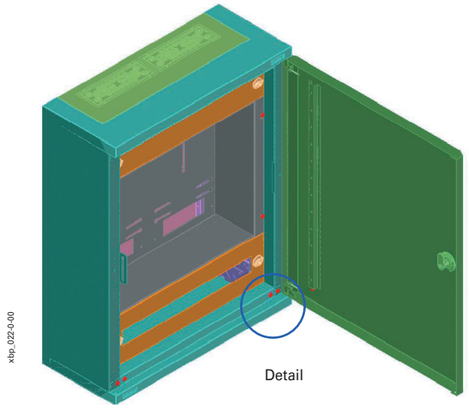

Detail

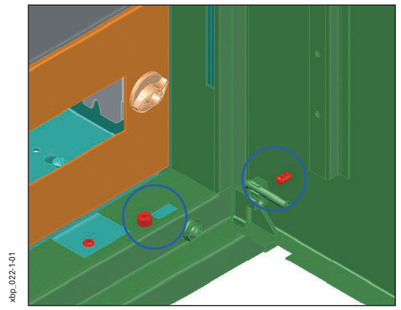

Flush mounted boards BP-U

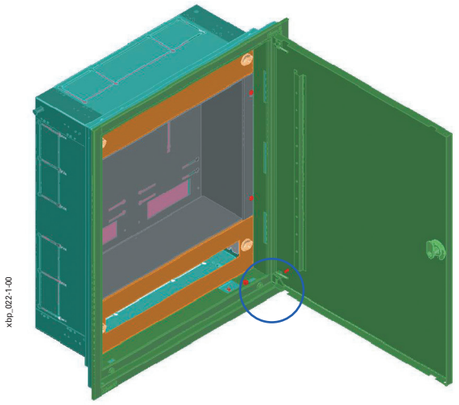

Floor-standing boards BP-F

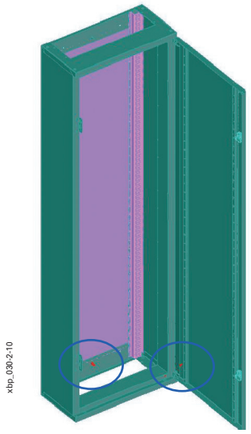

Detail

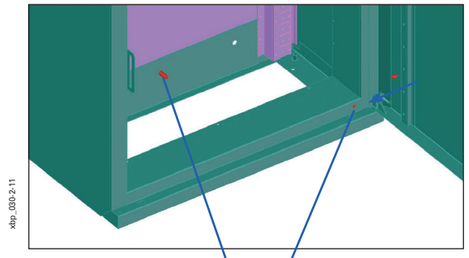

Connection of earthing set for door. Nut in the board frame and earthing screw on the door

Central earthing screw in rear side of a board

Inscription strips, LAB-BAR

Dimensions [mm]

Type	Number of modules MU	Length A
LAB-BAR_13TE	13	228
LAB-BAR_24TE	24	420
LAB-BAR_46TE	46	805
LAB-BAR_57TE	57	998
LAB-BAR_1000	-	1000
LAB-BAR_3000	-	3000

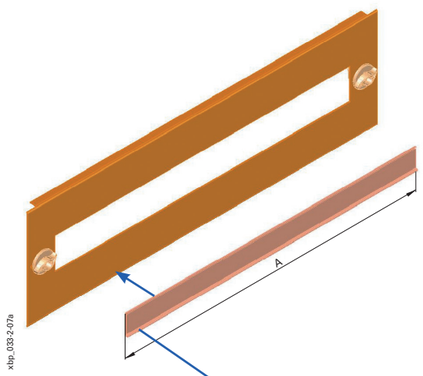

LAB-BAR
Inscription strips.
Mounting onto front plate by means of self-sealing strips.

Detail

To insert leave e.g.
LAB-TAPE-A4

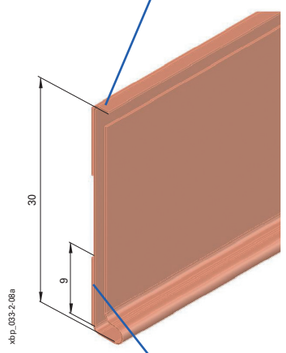

Self-sealing strip

Enclosure leaves LAB-TAPE_A4 for the inscription strips LAB-BAR

Technical data

Empty:
1 sheet contains 8 strips of width 27 mm and length 297 mm. Perforated for easy-to-remove.

Imprinted:	
For device width	Numerical print
1,5 MU	1-30
2 MU	1-24
3 MU	1-5
4 MU	1-4

Circuit diagram bag, LAB-BAG_A4

Dimensions [mm]

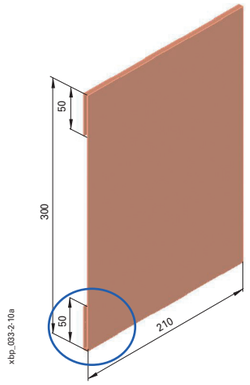

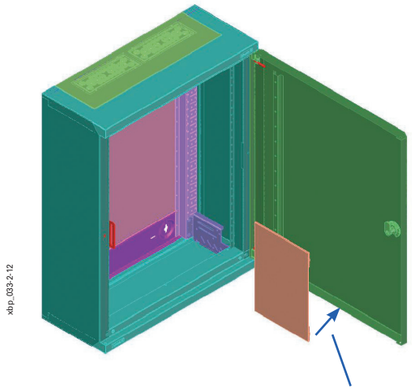

Circuit diagram bag LAB-BAG can be fitted onto a door via two self-sealing strips at the top and bottom

193170_LDO, 293313_LDO, 501316_LDO1

Distribution Boards

Distribution Boards

• Chapter 0
Table of Contents ..... Page 3

• Chapter 1
Field distribution boards protection class II ..... Page 4
1.1 Surface-mounted field distribution board EWK-G.., IP31 ..... Page 5

• Chapter 2
Enclosures / switchgear cabinets for installation system EP in protection class I and II ..... Page 10
2.1 Surface-mounted and floor-standing distribution board EMC2-H.../55-W, IP55 ..... Page 11
2.2 Surface-mounted distribution board BP-O-...-EP-W, IP31 ..... Page 20
2.3 Surface-mounted distribution board BPM-O-...-EP, IP55 ..... Page 26
2.4 Floor-standing distribution board BPM-F-...-EP, IP55 ..... Page 29

• Chapter 3
EP installation system - standard modules / mounting kits ..... Page 34
3.1 EP installation system - standard modules / Fitting-kits, Width 250 mm ..... Page 36
3.2 EP installation system - standard modules / Fitting-kits, Width 500 mm ..... Page 40
3.3 EP installation system - standard modules / Fitting-kits, Width 750 mm ..... Page 44
3.4 EP installation system - standard modules / Fitting-kits, Technical data ..... Page 46

• Chapter 4
EP installation system - general accessories ..... Page 53

• Chapter 5
Enclosures / switchgear cabinets for installation system ProfiSNAP ..... Page 66
5.1 Surface-mounted distribution board BP-O-..., IP30 (pre-assembled) ..... Page 67
5.2 Surface-mounted distribution board BP-O-..., IP30 (flat-pack, grey) ..... Page 72
5.3 Surface-mounted distribution board BP-O-..., IP30 (flat-pack, white) ..... Page 74
5.4 Surface-mounted distribution board BPM-O-..., IP55 ..... Page 95
5.5 Flush-mounted distribution board BP(A/M)-U-3S-..., IP30/IP43/IP54 ..... Page 105
5.6 Floor-standing distribution board BP-F-..., IP30 ..... Page 119
5.7 Outdoor distribution board BP-VF/DZ..., IP44 ..... Page 130
5.8 Floor-standing distribution board BPM-F-..., IP55 ..... Page 137
5.9 Shared compartments inside distribution boards BP(M)-O, BP(M)-F ..... Page 149

• Chapter 6
ProfiSNAP installation system - components for interior fitting ..... Page 154
6.1 Front plates, blind and with 45mm cut-out for DIN-rail devices ..... Page 156
6.2 Mounting kits for Moulded Case Circuit Breaker ..... Page 164
6.3 Mounting kits for Fuse Switch Disconnectors ..... Page 182
6.4 Mounting kits for BZM, Dumeco and QSA ..... Page 188
6.5 Mounting kits for Earthing and Neutral conductors ..... Page 189
6.6 Mounting plates for universal fixing of different components ..... Page 192
6.7 Mounting kits for Energy Meters and various metering equipment ..... Page 200

• Chapter 7
ProfiSNAP installation system - general accessories ..... Page 207

• Chapter 8
General accessories xEnergy Basic ..... Page 228

• Chapter 9
Overall technical data xEnergy Basic ..... Page 248

• Chapter 10
Verification of temperature rise by testing - selection of reference examples ..... Page 253

System Overview

Eaton Online Katalog - find product details quickly and efficiently!

You can find comprehensive up-to-date product information at http://ecat.eaton.com/catalog

Online Catalogue

Lookup

You can search by keywords, product names, article numbers, technical data: The search understands everything and takes you straight to the product you're looking for.

Graphical navigation

Graphical representation of the fields of application and product groups.

Selection aids

Tailored to the typical expert's approach, this search aid helps you quickly find the product you need.

Data sheets

For every article the catalog can generate a technical data sheet, which you can convert to a PDF file for printing or saving with a single click.

Parts lists

From your search results you can create a parts list that you can then send to your Eaton sales partner as a query.

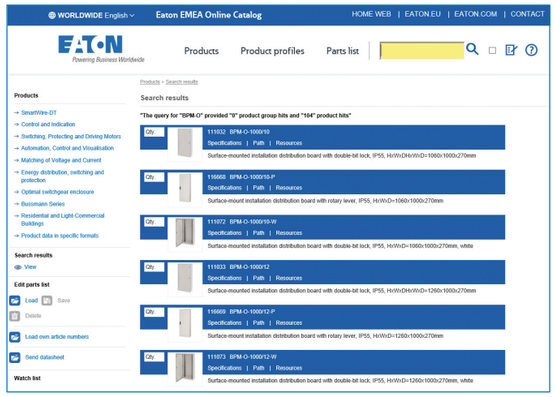

Parts list, e.g. for queries to Eaton Sales.

Eaton xEnergy Configurator - makes it easy to configure your product!

The Eaton configurator helps you by assembling the switchboard systems by keeping all standards. If you are interested, please contact your local Eaton representative.

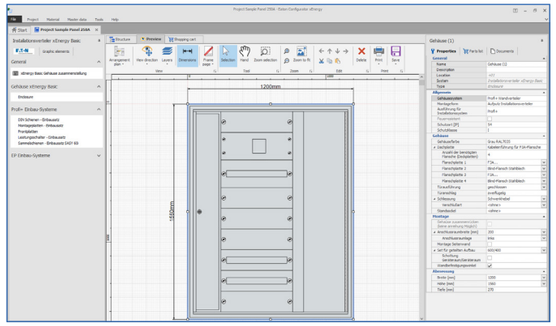

Eaton Temperatur Calculator Tool - temperature rise verification by calculation!

Calculating the temperature rise within the switchgear and controlgear assembly: Calculate power loss of all circuits including the incoming conductor on the basis of the rated current. Power loss of the switchgear and controlgear assembly is calculated by adding up the power losses of all circuits (total load current is limited to the rated current of the switchgear and controlgear assembly).

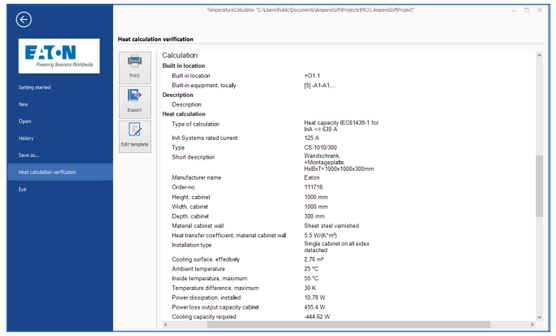

Technical Data

Standards	IEC/EN 61439-1/-2/-3, IEC 62208
Degree of protection	IP2XC (door opened, closed front cover level) IP30 (BP-F / BP-O / BP-U-3S) IP31 (BP-F / BP-O with canopy, EWK) IP43 (BPA-U-3S) IP44 (BP-VF/DZ) IP54 (BPM-U-3S) IP55 (BPM-F / BPM-O / EMC2)
Mechanical impact protection	IK08 (IP30/IP31/IP43/IP54) IK10 (IP44/IP55)
Form of separation	up to Form 4b (in combination with ProfiSNAP installation system)
Internal segregation	IPXXB
Rated insulation voltage [Ui]	440 VAC
Rated operational voltage [Ue]	415 VAC
Ambient air temperature	-5°C to +40°C (all enclosures / cabinets) -25°C to +40°C (BP-VF/DZ)
Place of installation	Indoor use severity A (all enclosures / cabinets) Outdoor use severity B (BP-VF/DZ and BPA-U-3S)
Rated impulse withstand voltage [Uimp]	4 kV
Overvoltage category	III
Pollution degree	3
Protection against electric shock	Protective earthing (protection class I) - all BP types Protective insulation (protection class II) - EWK / EMC2
Joule integral I^2dt for earthing connection	Type BPM-F / BPM-O
- Base frame M8 earthing bolt @ 1,25mm sheet metal	1,16x10^7 A^2s
- Door M6 earthing bolt @ 1,25mm sheet metal	4,68x10^6 A^2s
Seismic characteristics	IEC/EN 60068-3-3: ground acceleration level AG2 and AG5;
Rated current [Ie]	up to 630A depending on main incomer and used busbar-system
Rated frequency	50 Hz
Rated conditional short-circuit current [Icc]	up to 25/50 kA depending on incoming circuit-breaker and type of cabinet
Rated short-time withstand current [Icw]	depending on used busbar-system like SASY60i, SL630xx etc.
Net configuration	TN-C, TN-C-S, TN-S, TT, IT
Colour	RAL 7035 / RAL 9016
Material of enclosure	Standard sheet-metal (phosphatized and polyester powder-coated) Galvanized parts mainly for interior finish without powder-coating
Dimensions	height: 460 / 760 / 800 / 1060 / 1100 / 1260 / 1400 / 1560 / 1760 / 1910 / 2060 mm width: 350 / 400 / 600 / 800 / 850 / 1000 / 1100 / 1200 / 1350 mm depth: 180 / 240 / 250 / 270 / 300 / 320 / 400 mm

Testing of a low-voltage switchgear assembly under seismic conditions

- The tests carried out to qualify these switchboards are described in the international standard IEC 60068-3-3.
- On the one hand, it is about the functional integrity of the electrical system, as well as external stability during an earthquake.
- The prerequisite for this is that the distribution board is rigidly connected to the building construction. (K-factor 1.5).
- Wall enclosures are fixed at the designated points, floor-standing cabinets are also placed next to a wall and secured with mounting brackets on the top. A free-standing installation in the room is not covered hereby.
- There is no additional equipment required to achieve earthquake resistance.

Test methods:

Sine-sweep acc.to IEC 60068-2-6:2008

Time-history and sine-beat acc.to IEC 60068-2-57:2015

- Testing of the selected equipment under test, in the two horizontal and one vertical axis, was carried out to the appropriate "Required Response Spectrum" (RRS) shown as AG2 and AG5 curves of IEC 60068-3-3. As specified in IEC 60068-3-3, the AG5 spectrum, approximates to the Uniform Building Code (UBC) Zone 4.
- Testing was also carried out in general accordance with IEEE Std 344-2013, IEEE recommended practice for Seismic Qualification of Class 1E Equipment for Nuclear Power Generating Stations. Five "Operating Basis Earthquakes (OBE)" were carried out at AG2 level, followed by a single "Safe Shutdown Earthquake (SSE)" at level AG5.

Classification earthquake protection for xEnergy Basic:

IEC 60068-3-3: ground acceleration level AG2 and AG5; as an orientation, these values are comparable to

- Richter scale magnitude > 7.0
- Uniform Building Code (UBC) Zone 4
- MSK intensity (Medvedev-Sponheur-Karnik corresponds to modified Mercalli Intensity Scale) > IX
- IEEE Std 344-2013 Class 1E (Equipment for Nuclear Power Generating Stations)

193170_LDO, 293313_LDO, 501316_LDO1

Distribution Boards

Distribution Boards

• **Chapter 0**
Table of Contents ..... Page 3

• **Chapter 1**
Field distribution boards protection class II ..... Page 4
1.1 Surface-mounted field distribution board EWK-G.., IP31 ..... Page 5

• **Chapter 2**
Enclosures / switchgear cabinets for installation system EP in protection class I and II ..... Page 10
2.1 Surface-mounted and floor-standing distribution board EMC2-H.../55-W, IP55 ..... Page 11
2.2 Surface-mounted distribution board BP-O-...-EP-W, IP31 ..... Page 20
2.3 Surface-mounted distribution board BPM-O-...-EP, IP55 ..... Page 26
2.4 Floor-standing distribution board BPM-F-...-EP, IP55 ..... Page 29

• **Chapter 3**
EP installation system - standard modules / mounting kits ..... Page 34
3.1 EP installation system - standard modules / Fitting-kits, Width 250 mm ..... Page 36
3.2 EP installation system - standard modules / Fitting-kits, Width 500 mm ..... Page 40
3.3 EP installation system - standard modules / Fitting-kits, Width 750 mm ..... Page 44
3.4 EP installation system - standard modules / Fitting-kits, Technical data ..... Page 46

• **Chapter 4**
EP installation system - general accessories ..... Page 53

• **Chapter 5**
Enclosures / switchgear cabinets for installation system ProfiSNAP ..... Page 66
5.1 Surface-mounted distribution board BP-O-..., IP30 (pre-assembled) ..... Page 67
5.2 Surface-mounted distribution board BP-O-..., IP30 (flat-pack, grey) ..... Page 72
5.3 Surface-mounted distribution board BP-O-..., IP30 (flat-pack, white) ..... Page 74
5.4 Surface-mounted distribution board BPM-O-..., IP55 ..... Page 95
5.5 Flush-mounted distribution board BP(A/M)-U-3S-..., IP30/IP43/IP54 ..... Page 105
5.6 Floor-standing distribution board BP-F-..., IP30 ..... Page 119
5.7 Outdoor distribution board BP-VF/DZ..., IP44 ..... Page 130
5.8 Floor-standing distribution board BPM-F-..., IP55 ..... Page 137
5.9 Shared compartments inside distribution boards BP(M)-O, BP(M)-F ..... Page 149

• **Chapter 6**
ProfiSNAP installation system - components for interior fitting ..... Page 154
6.1 Front plates, blind and with 45mm cut-out for DIN-rail devices ..... Page 156
6.2 Mounting kits for Moulded Case Circuit Breaker ..... Page 164
6.3 Mounting kits for Fuse Switch Disconnectors ..... Page 182
6.4 Mounting kits for BZM, Dumeco and QSA ..... Page 188
6.5 Mounting kits for Earthing and Neutral conductors ..... Page 189
6.6 Mounting plates for universal fixing of different components ..... Page 192
6.7 Mounting kits for Energy Meters and various metering equipment ..... Page 200

• **Chapter 7**
ProfiSNAP installation system - general accessories ..... Page 207

• **Chapter 8**
General accessories xEnergy Basic ..... Page 228

• **Chapter 9**
Overall technical data xEnergy Basic ..... Page 248

• **Chapter 10**
Verification of temperature rise by testing - selection of reference examples ..... Page 253

Temperature rise verification of a switchgear assembly with a single compartment and a rated current not exceeding 630 A according to IEC / EN 61439-1

	Verification by testing acc.to IEC/EN 61439-1 (sub-clause 10.10.2)	Derivation of ratings for similar variants acc.to IEC/EN 61439-1 (sub-clause 10.10.3)
	Characteristics of the tested switchgear combination according to the manufacturer's instructions:	**Requirements of switchgear assemblies, which are going to be verified in accordance with the tested assembly:**
Rated operational voltage (U_e)	415 VAC	up to 415 VAC
Rated frequency (f_n)	50 Hz	50 Hz / 60 Hz
Rated insulation voltage (U_i)	440 VAC	440 VAC
Pollution degree	3	3
Overvoltage category	III	III
Rated impulse withstand voltage (U_{imp})	4 kV	4 kV
Type of enclosure	BPM-O-400/7	BP(M)-O, BP(M)-F
Degree of protection (outside)	IP55	≤ IP55
(installation level)	IP2XC	IP2XC
Active ventilation	none	none
Type of assembly	Wall-mounted	Wall-mounted / stand-alone
Side-by-side arrangement	no	no
Dimensions of the enclosure (HxWxD)	760x400x270 mm	≥ 760x400x270 mm
Internal separation	none	none
Ambient temperature	35°C	35 °C
Max. permissible temperature inside the enclosure	70°C (ΔT = 35 K)	70 °C (ΔT = 35 K)
Main incomer (MCCB)	Typ NZMH1-A160	Series NZMx1-A… *)
Rated current (I_n)	160 A	up to 160 A
Type of outgoers (MCB/MCCB)	Series FAZ-Bxx/3	Series FAZ, FAZT, FAZ6, PLSM, PLS6, PLS4, CLS6, CLS4, PL6, PL7, PL9, PL10, EM, PXL, mMC
Number of outgoing circuits	6	≥ 6
Rated diversity factor (RDF)	acc.to IEC/EN 61439-2 table 101	acc.to IEC/EN 61439-2 table 101
Conductor cross-sections for rated currents	acc.to IEC/EN 61439-1 table 11	acc.to IEC/EN 61439-1 table 11
Temperature resistance cables (acc.to single-line diagram)	up to 105° C	up to 105° C
Temperature resistance flexibar (acc.to single-line diagram)	up to 125° C	up to 125° C
Calculated power loss (Pv) incl. devices, wiring, busbars, etc.	~ 110 W (± 5%)	≤ 110 W
Rated current of the assembly (I_nA)	146.3 A	≤ 146.3 A *)
Rated current of the assembly of %	~ 91.5 % of I_n	

Single-line diagram of the assembly with rated current ≤ 160 A:

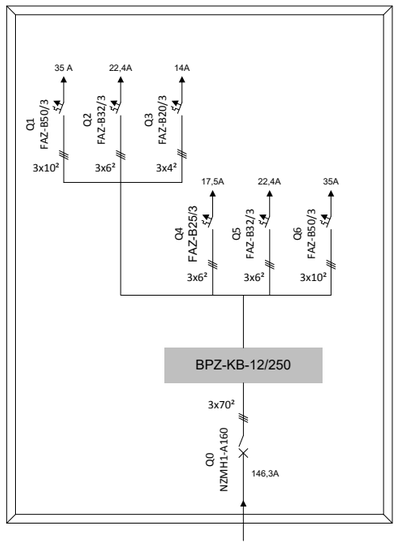

*) Table of rated currents of the assembly with main incomer part of NZMx1-A… series:

MCCB-Typ	Rated current (I_n)	Rated current of the assembly (I_nA)	% of I_n
NZMx1-A…	20	20	100% (no derating necessary)
	25	25	
	32	32	
	40	40	
	50	50	
	63	63	
	80	80	
	100	100	
	125	122	97.60%
	160	146.3	91.50%

Temperature rise verification of a switchgear assembly with a single compartment and a rated current not exceeding 630 A according to IEC / EN 61439-1

	Verification by testing acc.to IEC/EN 61439-1 (sub-clause 10.10.2)	Derivation of ratings for similar variants acc.to IEC/EN 61439-1 (sub-clause 10.10.3)
	Characteristics of the tested switchgear combination according to the manufacturer's instructions:	**Requirements of switchgear assemblies, which are going to be verified in accordance with the tested assembly:**
Rated operational voltage (U_e)	415 VAC	up to 415 VAC
Rated frequency (f_n)	50 Hz	50 Hz / 60 Hz
Rated insulation voltage (U_i)	440 VAC	440 VAC
Pollution degree	3	3
Overvoltage category	III	III
Rated impulse withstand voltage (U_{imp})	4 kV	4 kV
Type of enclosure	BPM-O-600/10	BP(M)-O, BP(M)-F
Degree of protection (outside)	IP55	≤ IP55
(installation level)	IP2XC	IP2XC
Active ventilation	none	none
Type of assembly	Wall-mounting	Wall-mounting / stand-alone
Side-by-side arrangement	no	no
Dimensions of the enclosure (HxWxD)	1060x600x270 mm	≥ 1060x600x270 mm
Internal separation	none	none
Ambient temperature	35 °C	35 °C
Max. permissible temperature inside the enclosure	70 °C (ΔT = 35 K)	70 °C (ΔT = 35 K)
Main incomer (MCCB)	Typ NZMN2-A250	Series NZMx2-A… / NZMx2-VE/AE… *)
Rated current (I_n)	250 A	up to 250 A
Type of outgoers (MCB/MCCB)	Series FAZ-Bxx/3 Series NZMx1-A..	Series FAZ, FAZT, FAZ6, PLSM, PLS6, PLS4, CLS6, CLS4, PL6, PL7, PL9, PL10, EM, PXL, mMC, Series NZMx1-A..
Number of outgoing circuits	7	≥ 7
Rated diversity factor (RDF)	acc.to IEC/EN 61439-2 table 101	acc.to IEC/EN 61439-2 table 101
Conductor cross-sections for rated currents	acc.to IEC/EN 61439-1 table 11	acc.to IEC/EN 61439-1 table 11
Temperature resistance cables (acc.to single-line diagram)	up to 105° C	up to 105° C
Temperature resistance flexibar (acc.to single-line diagram)	up to 125° C	up to 125° C
Calculated power loss (Pv) incl. devices, wiring, busbars, etc.	~ 140 W (± 5%)	≤ 140 W
Rated current of the assembly (I_nA)	225.4 A	≤ 225.4 A *)
Rated current of the assembly of %	~ 90.2 % of I_N	

Single-line diagram of the assembly with rated current ≤ 250 A:

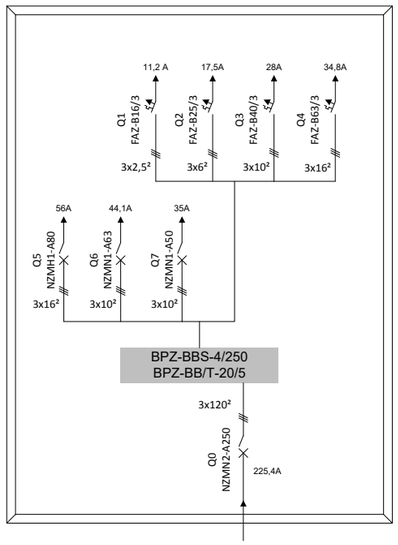

*) Table of rated currents of the assembly with main incomer part of NZMx2-A… / NZMx2-VE/AE… series:

MCCB-Typ	Rated current (I_n)	Rated current of the assembly (I_nA)	% of I_n
NZMx2-A… NZMx2-VE/AE…	125	125	100% (no derating necessary)
	160	160	
	200	187	93.50%
	250	225,4	90.20%

Temperature rise verification of a switchgear assembly with a single compartment and a rated current not exceeding 630 A according to IEC / EN 61439-1

	Verification by testing acc.to IEC/EN 61439-1 (sub-clause 10.10.2)	Derivation of ratings for similar variants acc.to IEC/EN 61439-1 (sub-clause 10.10.3)
	Characteristics of the tested switchgear combination according to the manufacturer's instructions:	**Requirements of switchgear assemblies, which are going to be verified in accordance with the tested assembly:**
Rated operational voltage (U_e)	415 VAC	up to 415 VAC
Rated frequency (f_n)	50 Hz	50 Hz / 60 Hz
Rated insulation voltage (U_i)	440 VAC	440 VAC
Pollution degree	3	3
Overvoltage category	III	III
Rated impulse withstand voltage (U_{imp})	4 kV	4 kV
Type of enclosure	BPM-O-800/10	BP(M)-O, BP(M)-F
Degree of protection (outside)	IP55	≤ IP55
(installation level)	IP2XC	IP2XC
Active ventilation	none	none
Type of assembly	Wall-mounted	Wall-mounted / stand-alone
Side-by-side arrangement	no	no
Dimensions of the enclosure (HxWxD)	1060x800x270 mm	≥ 1060x800x270 mm
Internal separation	none	none
Ambient temperature	35 °C	35 °C
Max. permissible temperature inside the enclosure	70 °C (ΔT = 35 K)	70 °C (ΔT = 35 K)
Main incomer (MCCB)	Typ NZMN3-VE400	Seriess NZMx3-A… / NZMx3-VE/AE… *)
Rated current (I_n)	400 A	up to 400 A
Type of outgoers (MCB/MCCB)	Series FAZ-Bxx/3 Series NZMx1-A.., NZMN2-A…	Series FAZ, FAZT, FAZ6, PLSM, PLS6, PLS4, CLS6, CLS4, PL6, PL7, PL9, PL10, EM, PXL, mMC, Series NZMx1-A.., NZMx2-A… / NZMx2-VE/AE…
Number of outgoing circuits	10	≥ 10
Rated diversity factor (RDF)	acc.to IEC/EN 61439-2 table 101	acc.to IEC/EN 61439-2 table 101
Conductor cross-sections for rated currents	acc.to IEC/EN 61439-1 table 11	acc.to IEC/EN 61439-1 table 11
Temperature resistance cables (acc.to single-line diagram)	up to 105° C	up to 105° C
Temperature resistance flexibar (acc.to single-line diagram)	up to 125° C	up to 125° C
Calculated power loss (Pv) incl. devices, wiring, busbars, etc.	~ 235 W (± 3%)	≤ 235 W
Rated current of the assembly (I_nA)	389.3 A	≤ 389.3 A *)
Rated current of the assembly of %	~ 97.3 % of I_n	

Single-line diagram of the assembly with rated current ≤ 400 A:

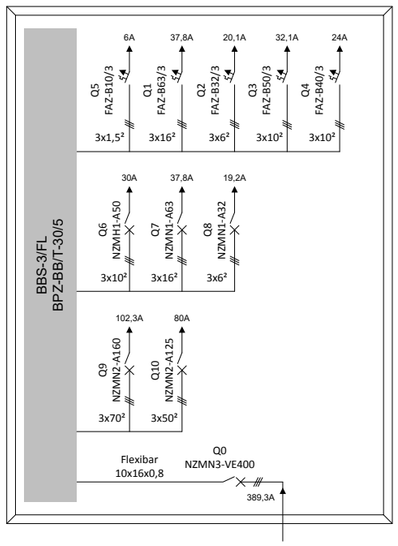

*) Table of rated currents of the assembly with main incomer part of NZMx3-A… / NZMx3-VE/AE… series:

MCCB-Typ	Rated current (I_n)	Rated current of the assembly (I_nA)	% of I_n
NZMx3-A	250	200	80%
	320	256	
	400	320	
NZMx3-VE/AE…	250	250	100% (no derating necessary)
	400	389.3	97.3%

Temperature rise verification of a switchgear assembly with a single compartment and a rated current not exceeding 630 A according to IEC / EN 61439-1

	Verification by testing acc.to IEC/EN 61439-1 (sub-clause 10.10.2)	Derivation of ratings for similar variants acc.to IEC/EN 61439-1 (sub-clause 10.10.3)
	Characteristics of the tested switchgear combination according to the manufacturer's instructions:	**Requirements of switchgear assemblies, which are going to be verified in accordance with the tested assembly:**
Rated operational voltage (U_e)	415 VAC	up to 415 VAC
Rated frequency (f_n)	50 Hz	50 Hz / 60 Hz
Rated insulation voltage (U_i)	440 VAC	440 VAC
Pollution degree	3	3
Overvoltage category	III	III
Rated impulse withstand voltage (U_{imp})	4 kV	4 kV
Type of enclosure	BPM-O-800/12	BP(M)-O, BP(M)-F
Degree of protection (outside)	IP55	≤ IP55
(installation level)	IP2XC	IP2XC
Active ventilation	none	none
Type of assembly	Wall-mounted	Wall-mounted / stand-alone
Side-by-side arrangement	no	no
Dimensions of the enclosure (HxWxD)	1260x800x270 mm	≥ 1260x800x270 mm
Internal separation	none	none
Ambient temperature	35 °C	35 °C
Max. permissible temperature inside the enclosure	70 °C (ΔT = 35 K)	70 °C (ΔT = 35 K)
Main incomer (MCCB)	Typ NZMN3-VE630	Series NZMx3-A… / NZMx3-VE/AE… *)
Rated current (I_n)	630 A	up to 630 A
Type of outgoers (MCB/MCCB)	Series FAZ-Bxx/3 Series NZMx1-A.., NZMC2-A…	Series FAZ, FAZT, FAZ6, PLSM, PLS6, PLS4 CLS6, CLS4, PL6, PL7, PL9, PL10, EM, PXL, mMC Series NZMx1-A.., NZMx2-A… / NZMx2-VE/AE…
Number of outgoing circuits	10	≥ 10
Rated diversity factor (RDF)	acc.to IEC/EN 61439-2 table 101	acc.to IEC/EN 61439-2 table 101
Conductor cross-sections for rated currents	acc.to IEC/EN 61439-1 table 11	acc.to IEC/EN 61439-1 table 11
Temperature resistance cables (acc.to single-line diagram)	up to 105° C	up to 105° C
Temperature resistance flexibar (acc.to single-line diagram)	up to 125° C	up to 125° C
Calculated power loss (Pv) incl. devices, wiring, busbars, etc.	~ 340 W (± 3%)	≤ 340 W
Rated current of the assembly (I_nA)	568.8 A	≤ 568.8 A *)
Rated current of the assembly of %	~ 90.3 % of I_n	

Single-line diagram of the assembly with rated current ≤ 630 A:

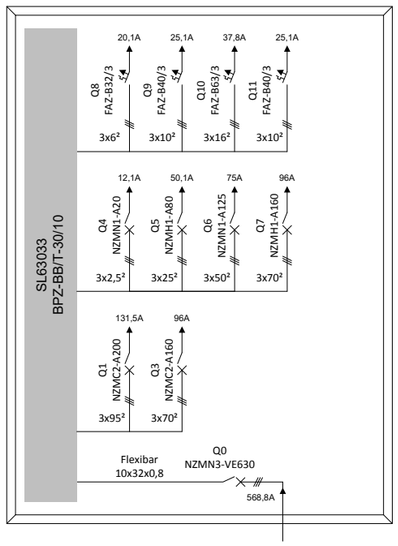

*) Table of rated currents of the assembly with main incomer part of NZMx3-A… / NZMx3-VE/AE… series:

MCCB-Typ	Rated current (I_n)	Rated current of the assembly (I_nA)	% of I_n
NZMx3-A…	320	320	100% (no derating necessary)
	400	400	
	500	500	
NZMx3-VE/AE…	250	250	100% (no derating necessary)
	400	400	
	630	568.8	90.30%

Eaton's electrical business is a global leader with deep regional application expertise in power distribution and circuit protection; power quality, backup power and energy storage; control and automation; life safety and security; structural solutions; and harsh and hazardous environment solutions. Through end-to-end services, channel and an integrated digital platform & insights Eaton is powering what matters across industries and around the world, helping customers solve their most critical electrical power management challenges.

For more information, visit **Eaton.com.**

For contact information, please go to
https://www.eaton.com/contacts

Please contact your local Eaton sales team about any questions.

Eaton Industries (Austria) GmbH
Scheydgasse 42
1210 Vienna
Austria

Eaton
EMEA Headquarters
Route de la Longeraie 7
1110 Morges, Switzerland

© 2022 Eaton
All Rights Reserved
Publication No. CA014010EN
Article number 192601-MK
February 2025

Changes to the products, to the information contained in this document, and to prices are reserved; as are errors and omissions. Only order confirmations and technical documentation by Eaton is binding. Photos and pictures also do not warrant a specific layout or functionality. Their use in whatever form is subject to prior approval by Eaton. The same applies to trademarks (especially Eaton, Moeller, and Cutler-Hammer). The Terms and Conditions of Eaton apply, as referenced on Eaton Internet pages and Eaton order confirmations.

Eaton is a registered trademark.

All other trademarks are property of their respective owners.

Follow us on social media to get the latest product and support information.

4015081933297

Powering Business Worldwide