Eaton.com/xComfort

xComfort Smart Home Solution

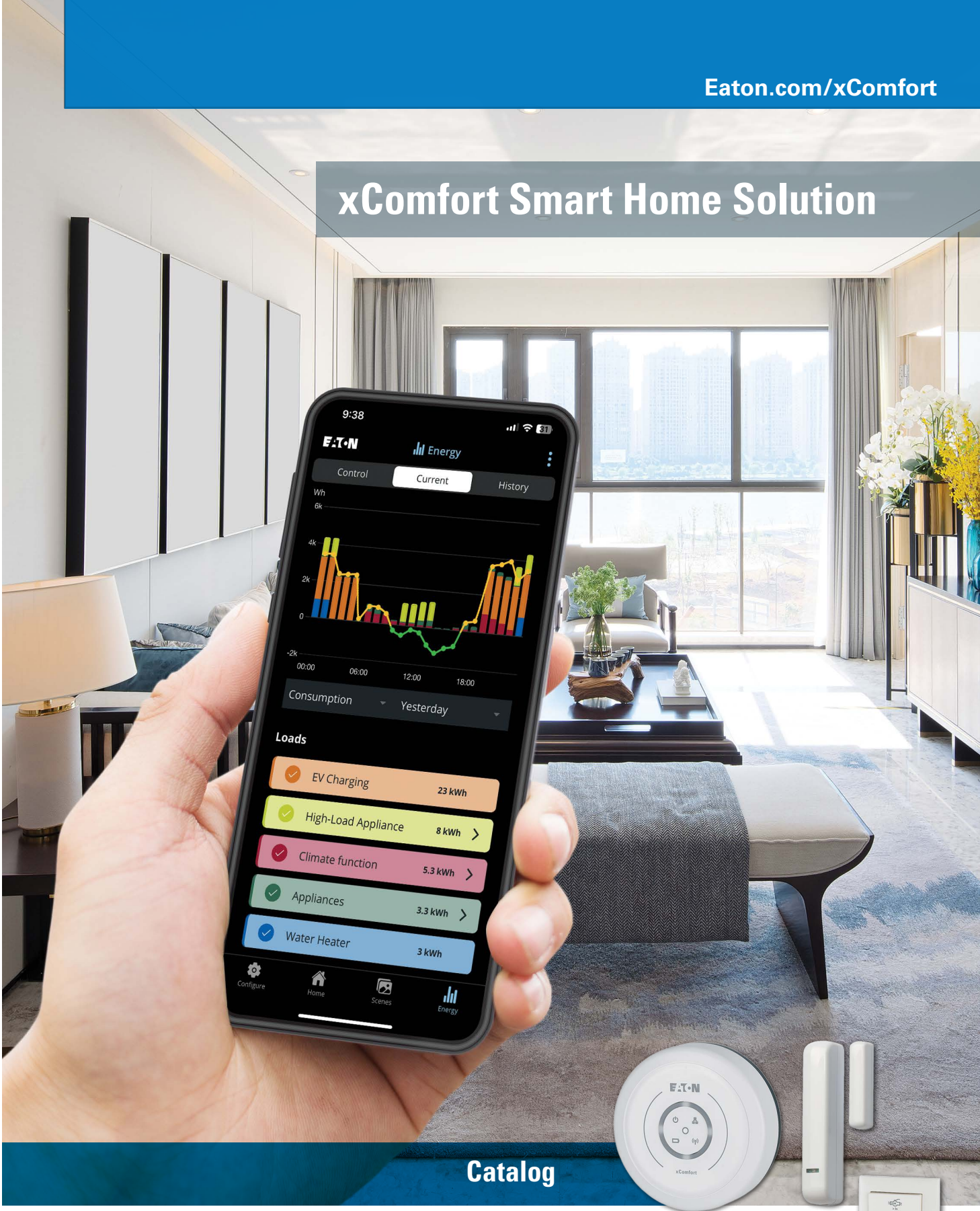

Catalog

Powering Business Worldwide

* At Eaton, we believe that power is a fundamental part of just about everything people do. That's why we're dedicated to helping our customers find new ways to manage electrical, hydraulic and mechanical power more efficiently, safely and sustainably. To improve people's lives, the communities where we live and work, and the planet our future generations depend upon. Because this is what really matters. And we're here to make sure it works.

To learn more go to: **Eaton.com/whatmatters**

Powering Business Worldwide

Increase comfort and peace of mind with the xComfort Smart Home Solution.

How it works?

Lighting control

Easy and simply control the lights in your home via wireless switches, the app or via light scenes.

Water leakage detection and control

xComfort LeakageStop is a smart solution for peace of mind that detects water leakages, triggers alerts, and prevents damage by controlling a standard third-party solenoid valve.

Shading control

Modern and easy-to-install design allows a smart solution for controlling blinds, shutters, zip screens or awnings.

Heating control – temperature regulation

Easy individual temperature control in each room saves up to 6% in heating costs per degree Celsius without comfort loss.

xComfort system range overview and functions

Switching Actuator

switches lights, pumps, ventilation and heating systems, saunas or any electrical consumer.

Shutter Actuator

for controlling blinds, shutters, mixing values, etc.

Smart Dimming Actuator

switches and dims lights and enables lighting solutions.

Binary Input Unit

for integrating conventional switches, window contacts and signal contacts.

Adapter Plug

switches and dims living room fountains, aquaria, etc.

Push-button Unit

for lighting, shading, etc.

Heating Actuator

for electrical heating with energy measurement.

xComfort Bridge

enables easy configuration and remote control of lighting and other functions via smart phone using the xComfort Bridge app.

Router

redirects information when direct transmission is not possible

Room Controller Touch

regulates and controls heating and shading.

Temperature Input Unit

measures temperature and enables efficient shading and heating solutions.

Door/Window Sensor

a wireless slimline sensor for monitoring doors and windows and activating home functions.

Remote Control

controls lights, shading and other electrical consumers.

Analog Actuator

switches and dims lights and light environments.

xComfort Weather Station

measures meteorological data like sunlight strength, rain, temperature and wind speed

xComfort LeakageStop

protects against water damage and has remote operation, monitoring, and notification via the xComfort Bridge app

Motion Sensor

controls lights depending on movement and brightness

www.eaton.com/xcomfort

learn more - visit us online

XCOMFORT SMART HOME SOLUTION CA004001EN www.eaton.com

Technologies that make your home safer, smarter, more energy-efficient and more comfortable

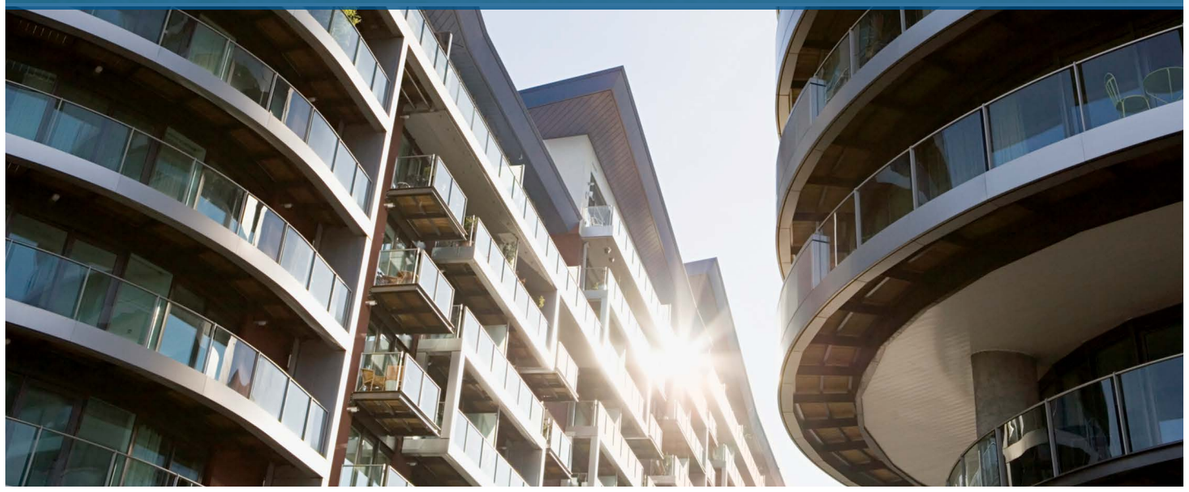

EATON
Powering Business Worldwide

LiveSafe
LiveSmart

Eaton RF System

Table of Contents

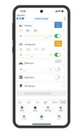

The most important devices - overview 8

rf00818_r

Packages 14

rf03313

Flush Devices 21

rf00219

Surface-mounted Devices 28

rf01718_r

Adapter Plugs 34

rf03710

Built-in Devices 36

rf10310

Remote Controls 39

rf02018_r

Sensors 41

rf01012

Accessories 45

100-00001

Rockers 50

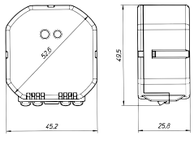

Wiring Examples 56
Device Information 78
Installation 113
Functions 118

Flush Devices

RF03313

Version	Type Designation	Article No.	Pack (pcs.)
Switching Actuator, 10 A / 230 VAC	CSAU-01/01-10	172937	1
Switching Actuator, Binary Input, 10 A / 230 VAC	CSAU-01/01-10I	172938	1
Switching Actuator, Binary Input, Energy measuring sensor, 10 A / 230 V AC	CSAU-01/01-10IE	172939	1
Switching Actuator, 16 A / 230 VAC	CSAU-01/01-16	172940	1
Switching Actuator, Binary Input, 16 A / 230 VAC	CSAU-01/01-16I	172941	1
Switching Actuator, Binary Input, Energy measuring sensor, 16 A / 230 VAC	CSAU-01/01-16IE	172942	1
Switching Actuator potential-free, 8 A / 230 VAC	CSAU-01/02	240694	1
Switching Actuator potential-free, Push-button function, Basic-Mode, 8 A / 230 VAC	CSAU-01/04	121080	1
Switching Actuator all-pole, 6 A / 230 VAC	CSAU-01/03	240695	1
Shutter Actuator, 6 A / 230 VAC	CJAU-01/02	240696	1
Shutter Actuator, 3 A / 230 VAC	CJAU-01/04	EP-500362	1
Shutter Actuator, Binary Input, 3 A / 230 VAC	CJAU-01/04-I	EP-500363	1
Smart Dimming Actuator, 250 W / 230 VAC	CDAU-01/04	182443	1
Smart Dimming Actuator, Binary Input, 250 W / 230 VAC	CDAU-01/04-I	182444	1
Smart Dimming Actuator, Energy measuring sensor, 250 W / 230 VAC	CDAU-01/04-E	182445	1
Heating Actuator, Energy measuring sensor, 10 A / 230 VAC	CHAU-01/01-10E	194372	1
Heating Actuator, Energy measuring sensor, 16 A / 230 VAC	CHAU-01/01-16E	194373	1
Heating Actuator silent, Energy measuring sensor, 1 A / 230 VAC	CHAU-01/01-1ES	194374	1
Router, 230 VAC	CROU-00/01-S	172943	1
Router + Logic, 230 VAC	CROU-00/01-SL	172944	1
PHASE OUT Energy measuring sensor, Measuring range 3-3680 W, 0.42 W / 230 VAC	CEMU-01/04	136477	1
Binary Input, 2x 230 VAC	CBEU-02/03	182450	1

RF06410

Binary Input, 2x Signal contact	CBEU-02/02	265627	1
Temperature Input Unit, 2x -50 to 180 °C	CTEU-02/01	265628	1

wa_ren_rf_00321 + wa_ren_rf_00521

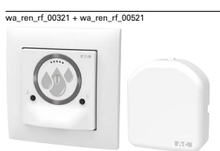

LeakageStop– Universal, pure white	CWGE-0U/31	EP-500533

Surface-mounted Devices

RF01314

Version	Type Designation	Article No.	Pack (pcs.)
Standard Switch			
Single, gloss white RAL9010	CPAD-00/193	173411	1
Double, gloss white RAL9010	CPAD-00/194	173412	1
4-fold, gloss white RAL9010	CPAD-00/195	173413	1
Multifunctional Switch			
Single, gloss white RAL9010	CPAD-00/233	EP-500383	1
Double, gloss white RAL9010	CPAD-00/234	EP-500384	1
4-fold, gloss white RAL9010	CPAD-00/235	EP-500385	1

RF10610

Single push-button, 55x55 mm, without LED	CTAA-01/04	125969	1
Double push-button, 55x55 mm, without LED	CTAA-02/04	126030	1
4-fold push-button, 55x55 mm, without LED	CTAA-04/04	126031	1
Multifunctional single pushbutton, 55x55 mm	CTSA-01/04	EP-500380	1
Multifunctional double pushbutton, 55x55 mm	CTSA-02/04	EP-500381	1
Multifunctional 4-fold pushbutton, 55x55 mm	CTSA-04/04	EP-500382	1

wa_rf00217

Room Controller Touch, Pure white, gloss, Universal	CRCA-00/08	187708	1
Room Controller Touch, Anthracite, matt, Universal	CRCA-00/09	187709	1
Room Controller Touch, Traffic white, gloss, Universal	CRCA-00/10	187710	1
Room Controller Touch, Alpine white, gloss, Universal	CRCA-00/11	187711	1
Room Controller Touch, Signal white, gloss, Universal	CRCA-00/12	193911	1
Room Controller Touch, Jet black, matt, Universal	CRCA-00/13	195246	1
Room Controller Touch, Silver, matt, Universal	CRCA-00/14	304416	1
NEW Room Controller Touch, Alpine white, matt, Universal	CRCA-00/15	EP-502110	1
Room Controller Touch, Pure white, gloss, Legacy	CRCA-01/08	EP-500832	1
Room Controller Touch, Anthracite, matt, Legacy	CRCA-01/09	EP-500833	1
Room Controller Touch, Traffic white, gloss, Legacy	CRCA-01/10	EP-500834	1
Room Controller Touch, Alpine white, gloss, Legacy	CRCA-01/11	EP-500835	1
Room Controller Touch, Signal white, gloss, Legacy	CRCA-01/12	EP-500836	1
Room Controller Touch, Jet black, matt, Legacy	CRCA-01/13	EP-500837	1
Room Controller Touch, Silver, matt, Legacy	CRCA-01/14	EP-500838	1

	Version	Type Designation	Article No.	Pack (pcs.)
rf00219_r	xComfort Bridge, 5 VDC, <0,5 W	CBCA-00/01	196811	1
RF00113	PHASE OUT Smart Home Controller, 5 VDC, 2 W	CHCA-00/01	171230	1
RF08611	Ethernet Communication Interface, ECI, LAN, 2.5 W, 5-24 VDC	CCIA-02/01	155447	1
	Ethernet Communication Interface, ECI, LAN POE, 2.5 W, 36-57 VDC	CCIA-03/01	155448	
rf02018_r	RF Radiator Thermostat	CHVZ-01/05	195213	1

For further products, please refer to the catalogue.

	Version	Type Designation	Article No.	Pack (pcs.)
rf01718_r	**Adapter Plugs**			
	Switching Plug, Energy measuring sensor, 12 A / 230 VAC			
	F-Type, side earthing	CSAP-01/F5-12E	195168	1
	E-Type, earthing pin	CSAP-01/E5-12E	195169	1
	J-Type, S13	CSAP-01/J5-12E	195171	1
	F-Type, side earthing, grey	CSAP-01/Fa-12E	195826	1
rf02718_r	**Dimming Plug, Energy measuring sensor, 250 W / 230 VAC**			
	F-Type, side earthing	CDAP-01/F5-1E	195172	1
	E-Type, earthing pin	CDAP-01/E5-1E	195173	1
	J-Type, S13	CDAP-01/J5-1E	195175	1
	F-Type, side earthing, grey	CDAP-01/Fa-1E	195827	1
	Heating Plug, Energy measuring sensor, 12 A / 230 VAC			
	F-Type, side earthing	CHAP-01/F5-12E	195176	1
	E-Type, earthing pin	CHAP-01/E5-12E	195177	1
	J-Type, S13	CHAP-01/J5-12E	195179	1
	F-Type, side earthing, grey	CHAP-01/Fa-12E	195828	1
wa_ren_rf_01021	**Shutter Actuator**			
	Shutter Actuator, 3 A / 230 VAC, STAS/K-3	CJAE-01/01	EP-500364	1

For further products, please refer to the catalogue.

RF03710

	Version	Type Designation	Article No.	Pack (pcs.)
	Built-in Devices			
	Analogue Actuator 0-10 VDC; 8 A / 230 VAC, 20 mA / 0-10 VDC	CAAE-01/01	240697	1
	Analogue Actuator 1-10 VDC, Dim level 0-100 %	CAAE-01/02	240698	1
PHASE OUT	2 Channel Analogue Input, 0-10 VDC, 0-20 mA, 4-20 mA, PT1000	CAEE-02/01	112240	1
	Smart Dimming Actuator, 250 W / 230 VAC	CDAE-01/04	182446	1
	Smart Dimming Actuator, Binary Input, 500 W / 230 VAC	CDAE-01/05-I	182448	1
	Smart Dimming Actuator, Energy measuring sensor, 500 W / 230 VAC	CDAE-01/05-E	182449	1
PHASE OUT	Impulse Counting Input 2-way, S0, 315 mA / 24 VDC	CIZE-02/01	118799	1

RF10310

	Remote Controls			
	Remote Control alarm, 1 channel (mini)	CHSZ-01/05	143807	1
	Remote Control, 2 channels (mini)	CHSZ-02/02	109383	1
	Remote Control, 12 channels	CHSZ-12/03	109384	1
	Remote Control with display, 12 channels	CHSZ-12/04	118803	1

For further products, please refer to the catalogue.

wa_ren_rf_00621

Sensors

LeakageStop – Detector, battery, pure white	CWGA-0D/01	EP-500536	

wa_rf05019_r, wa_rf04919_r
wa_rf05119_r, wa_rf05219_r

Version	Type Designation	Article No.	Pack (pcs.)
Door/Window Sensor, Warm white	CDWA-01/3a	300294	1
Door/Window Sensor, Bright white	CDWA-01/3b	300295	1
Door/Window Sensor, Grey	CDWA-01/3c	300296	1
Door/Window Sensor, Brown	CDWA-01/3d	300297	1

wa_ren_09919_l, wa_ren_10219_l

Universal Motion Sensor, Pure white	CBMD-02/01	300918	1
Universal Motion Sensor, Jet Black	CBMD-02/02	300919	1

wa_rf01221_c NEW

xComfort Weather Station	CWSA-04/01	EP-500529	1

Accessories

RF01012

USB Configuration Stick	CKOZ-00/13	168548	1
USB Communication Stick	CKOZ-00/14	168549	1

For further products, please refer to the catalogue.

Version	Type Designation	Article No.	Pack (pcs.)

Wireless Switch All

rf00818_r

- Control any light or appliance via this wireless switch, which can be mounted on any surface:
  - Can control any type of load
  - Durable hybrid switching technology
  - Easy to install, comes pre-programmed
  - Wireless switch - can be placed on any surface
  - Compatible with universal 55 mm switches
- The package includes:
  1 x Compact Switching Actuator
  1 x Wireless Switch 55 mm (battery included)
  2 x Adhesive tape
- Color: Pure white gloss

R, L, C, LED: 10 A	CPAD-00/212	193727	1

Wireless Second Switch

rf01018_r

- Expand your options by adding this wireless switch, which can be mounted on any surface:
  - Can control any type of load
  - Durable hybrid switching technology
  - Easy to install, comes pre-programmed
  - Wireless switch - can be placed on any surface
  - Compatible with universal 55 mm switches
- The package includes:
  1 x Compact Switching Actuator with Local Input
  1 x Wireless Switch 55 mm (battery included)
  2 x Adhesive tape
- Color: Pure white gloss

R, L, C, LED: 10 A	CPAD-00/215	193730	1

Wireless Dim All

rf01118_r

- Dim any dimmable light, including LEDs, by using this wireless switch, which can be mounted on any surface:
  - Dims all types of dimmable light bulbs (e.g. LEDs)
  - Smooth dimming, no afterglow of LEDs, noiseless
  - Easy to install, comes pre-programmed
  - Wireless switch - can be placed on any surface
  - Compatible with universal 55 mm switches
- The package includes:
  1 x Smart Dimming Actuator
  1 x Wireless Switch 55 mm (battery included)
  2 x Adhesive tape
- Color: Pure white gloss

R, L, C: 0-250 W (0-250 VA), LED, ESL: 0-100 W (TYP)	CPAD-00/213	193728	1

Version	Type Designation	Article No.	Pack (pcs.)

Wireless Shading-flush mounted

rf00718_r

- Control any electric blinds, shutters or curtain (230 V) via this wireless switch, which can be mounted on any surface:
  - Control of electric shutters, blinds, sunshades or curtains (230 V)
  - Easy wireless operation
  - Easy to install, comes pre-programmed
  - Wireless switch - can be placed on any surface
  - Compatible with universal 55 mm switches
- The package includes:
  1 x Shutter actuator - Slim design
  1 x Wireless Switch 55 mm (battery included)
  2 x Adhesive tape
- Color: Pure white gloss

3 A	CPAD-00/236	EP-501395	1

Wireless Ventilation

rf00918_r

- Control the ventilation speed or set the timer via this wireless switch, which can be mounted on any surface:
  - Flexible control of ventilation systems
  - Simply set ventilation speed, with timer function
  - Easy to install, comes pre-programmed
  - Wireless switch - can be placed on any surface
  - Compatible with universal 55 mm switches
- The package includes:
  1 x Ventilation Actuator
  1 x 2-fold wireless switch 55 mm (battery included)
  2 x Adhesive tape
- Color: Pure white gloss

6 A	CPAD-00/216	193731	1

Wireless Heating

wa_rf00118

- Control any electric heater via the wireless Room Controller Touch, which can be mounted on any surface:
  - Suitable for all electric heating cables, foil and panels
  - Durable hybrid switching technology
  - Easy to install, comes pre-programmed
  - Wireless Room Controller Touch - can be placed on any surface
  - Compatible with universal 55 mm switches
- The package includes:
  1 x Compact Heating Actuator
  1 x Room Controller Touch 55 mm
  2 x Adhesive tape
  2 x Battery LR03 AAA-Micro 1.5 V
- Color: Pure white gloss

R, L, C: 16 A	CPAD-00/217	193732	1

Version	Type Designation	Article No.	Pack (pcs.)

Wireless Effect Regulation

wa_ren_05420

- Control the power of any electric heater, by setting percentage of time during which heating should be active, via the wireless Room Controller Touch, which can be mounted on any surface:
- Suitable for all electric heating cables, foil and panels
- Durable hybrid switching technology
- Easy to install, comes pre-programmed
- Wireless Room Controller Touch - can be placed on any surface
- Compatible with universal 55 mm switches
- The package includes:
  1 x Compact Heating Actuator
  1 x Room Controller Touch 55 mm
  2 x Adhesive tape
  2 x Battery LR03 AAA-Micro 1.5 V
- Color: Pure white gloss

R, L, C: 10 A	CPAD-00/231	301922	1

Wireless Motion – Switch

wa_ren_00220

- Can control any type of load
- Durable hybrid switching technology
- Easy to install, comes pre-programmed
- Universal Motion sensor - can be mounted in 4 different ways, in an installation box in the ceiling, on a surface glued with adhesive tapes, on a surface screwed or in an installation box (e.g. wall) combined with a standard 55x55mm WA frame
- Compatible with 55x55mm frames of leading WA brands
- Motion detection parameters can be easily adjusted by on-device buttons.
- The package includes:
  1 x Compact Switching Actuator 10A
  1 x Universal Motion sensor (battery included)
  2 x Adhesive tape
  2 x 1.5mm2 wires
  2x screws + dowels

Color: Pure white gloss

R, L, C, LED: 10 A	CPAD-00/230	300920

Wireless Dim & App set - Flush mount

wa_ren_09619

- Wireless xComfort Bridge package with 3 Smart Dimming Actuators 0-100W (R/L/C/LED). Invisible and easy flush-mounted installation without major construction work (neutral wire is needed). Including 3 wireless switches and 1 wireless master switch (pre-configured with actuators), which can be placed on any surface. Compatible with universal 55 mm switches. Simple configuration and control via App (iOS, Android). No programming knowledge required. Dims all types of dimmable light bulbs (e.g. LEDs) starting from 0W!. Smooth dimming, no afterglow of LEDs, noiseless.
- The package includes:
  1x xComfort Bridge
  3x Smart Dimming Actuator
  3x Wireless Switch 55mm
  1x Wireless Master Switch 55mm
- Color: Pure white gloss

Flush mounted, R,L,C,LED,ESL: 0 - 100 W (TYP)	CPAD-00/221	300310	1

Version	Type Designation	Article No.	Pack (pcs.)

Wireless Dim & App set - Plug-in

wa_ren_09719

- Wireless xComfort Bridge package with 3 Smart Dimming Plug-In Adapters 0-250W (R/L/C/LED). Easy DIY installation. Simple configuration and control via App (iOS, Android). No programming knowledge required. Dims all types of dimmable light bulbs (e.g. LEDs) starting from 0W!. Smooth dimming, no afterglow of LEDs, noiseless.
- The package includes:
  1x xComfort Bridge
  3x Dimming Plug
- Color: Traffic white

F-Type Plug, Schuko	CPAD-00/222	300311	1

Bridge Energy Control - with energy meter NEW

005002_L

- xComfort Energy Control introducing load control based on electricity tariffs & monitoring of the total energy consumption your home electrical energy consumption and temperature control in one room through the included energy meter, xComfort actuators and wireless Room Controller Touch. With a simple and easy to understand display in the App you can visualize your day, week, month, and year electrical energy consumption.
- The package includes:
  1x xComfort Bridge
  1x Switching Actuator 16 A with Energy measurement sensor
  1x Heating Actuator 16 A with Energy measurement sensor
  1x Room Controller Touch, Pure white gloss 55x55mm
  1x Energy meter, 3 Phase up to 63 A, Modbus TCP
- **Important**: LAN cable (CAT5) for energy meter not included. 2 x Battery LR03 AAA-Micro 1.5 V are included

With energy meter	CPAD-00/244	EP-502626	1

Bridge Energy Control – for smart meter interface NEW

005001_L

- xComfort Energy Control introducing load control based on electricity tariffs & monitoring of the total energy consumption your home electrical energy consumption and temperature control in one room through the support of, 3rd party (not included), smart meter interface(s), xComfort actuators and wireless Room Controller Touch. With a simple and easy to understand display in the App you can visualize your day, week, month, and year electrical energy consumption.
- The package includes:
  1x xComfort Bridge
  1x Switching Actuator 16 A with Energy measurement sensor
  1x Heating Actuator 16 A with Energy measurement sensor
  1x Room Controller Touch, Pure white gloss 55x55mm
- **Important**: 2 x Battery LR03 AAA-Micro 1.5 V are included

For smart meter interface	CPAD-00/245	EP-502627	1

Version	Type Designation	Article No.	Pack (pcs.)

Room Controller Touch complete with frame

wa_rf00117

wa_rf00218_r

- The Room Controller Touch with temperature and humidity sensor is an excellent choice to monitor and control the climate in a room either stand-alone or together with an intelligent device (e.g. xComfort Bridge). Its touch display with backlight function offers an intuitive interface for the daily use.
  The user (re-)programmable Week Program Timer and the 4 Operation Modes temperatures, also user (re-)programmable, offer maximum flexibility to meet the specific room climate needs.
  The Room Controller Touch supports floor temperature control (min and max level) by connecting an external wired floor temperature sensor (PT1000).
  Its two optional touch-buttons on the display can be used to control other xComfort functions, for example a Switching or Dimming actuator for the lights, a Shutters/Blinds actuator or Scenes in the xComfort Bridge.
  Thanks to the universal 55x55 mm design of the Room Controller Touch it can be combined with frames from the switch industry (observe the compatibility list).
  The device is battery powered and through its flat design NO switch, branch or installation box is required, therefore it can be easily mounted anywhere (screwed and/or stick on) and on each surface.
  Power is supplied via two AAA batteries, but it is also possible to use, as alternative, the optional external mains power adapter.
  Adding comfort both for the user (daily operation and monitoring) and professional (full wireless) makes this device a perfect choice.
- Attention: The Room Controller Touch must not be used for safety installation and safety relevant functions like safety (floor) temperature switches.
- Attention: To precisely measure and display the values, please use the reference measuring device to determine the difference and then adjust the “offset” in the MRF.
- Batteries and the white frame are included in the scope of delivery
- Attention: The device contains the Universal version for use with the xComfort Bridge. For use with the xComfort Smart Home Controller (SHC) or Switching actuators the device needs to be reprogrammed, using the USB-Port, with the Legacy version.

Pure white, gloss, Universal	CPAD-00/198	187712	1
Jet black, matt, Universal	CPAD-00/199	195247	

Version	Type Designation	Article No.	Pack (pcs.)

Single push-button complete, without LED, gloss white RAL9010

RF01314

- The package includes:
  1x Single push-button, without LED
  1x Single rocker, without LED, white
  1x Frame, white, frame 55 mm
  2x Adhesive tape

	CPAD-00/193	173411	1

Double push-button complete, without LED, gloss white RAL9010

RF01214

- The package includes:
  1x Double push-button, without LED
  1x Double rocker, without LED, white
  1x Frame, white, frame 55 mm
  2x Adhesive tape

	CPAD-00/194	173412	1

4-fold push-button complete, without LED, gloss white RAL9010

RF01114

- The package includes:
  1x 4-fold push-button, without LED
  1x 4-fold rocker, without LED, white
  1x Frame, white, frame 55 mm
  2x Adhesive tape

	CPAD-00/195	173413	1

Version	Type Designation	Article No.	Pack (pcs.)

Multifunctional single pushbutton, complete, pure white gloss

RF01314

- The package includes:
  1x single multifunctional pushbutton
  1x single rocker, pure white gloss
  1x single frame, pure white gloss, 55 mm
  2x Adhesive tape

Attention: The temperature and humidity sensors only work with xComfort Bridge

	CPAD-00/233	EP-500383	1

Multifunctional double pushbutton, complete, pure white gloss

RF01214

- The package includes:
  1x double multifunctional pushbutton
  1x double rocker, pure white glos
  1x single frame, pure white gloss, 55 mm
  2x Adhesive tape

Attention: The temperature and humidity sensors only work with xComfort Bridge

	CPAD-00/234	EP-500384	1

Multifunctional 4-fold pushbutton, complete, pure white gloss

RF01114

- The package includes:
  1x 4-fold multifunctional pushbutton
  1x 4-fold rocker, pure white gloss
  1x single frame, pure white gloss, 55 mm
  2x Adhesive tape

Attention: The temperature and humidity sensors only work with xComfort Bridge

	CPAD-00/235	EP-500385	1

Version	Type Designation	Article No.	Pack (pcs.)

Switching Actuator

RF03613

- This generation Switching Actuators is characterized particularly by its small dimensions, high switching performance and extended functionality. Due to the Hybrid switching technology this Switching Actuator can switch a variety of devices/ systems such as lighting, ventilation, heating, alarm systems, etc ... It can be directly controlled by switches, sensors and Smart Devices.
  The device can easily be mounted in installation boxes for switches, branch-off boxes or standard installation boxes, or directly inside the cover of the light fixture.
- **Local Input Sensor 230 VAC**
  The extra local Input Sensor gives the opportunity to use the existing or any market available switch directly in combination with the Actuator without the need for addition components. It can also be used with existing Motion Sensors. Like a standard Binary Input Device this input can also be assigned to other devices to send switching signals.
- **Integrated Energy Measurement with Load Fault Indication**
  The internal „Energy Sensor“ is used to measure and record the energy consumption of the connected load. Like a standard Energy Measurement Sensor it can be assigned directly to a Smart Device like the Smart Home Controller to monitor and manage the power (W) and energy (kWh) consumption. The additional Load Error Detection status can be used to signal a failure of the switched load based on a load beneath the definable minimum consuming power.
  Attention: The device is not calibrated, it is therefore not suitable for invoicing purposes!
- **Extended Status Messaging (routable)**
  This Device supports the Extended Status Messaging format for high status reliability and additional status information in combination with Smart Devices like the Smart Home Controller.
- **ATTENTION!**
  CSAU-01/01-16, CSAU-01/01-16I, CSAU-01/01-16IE:
  This device must be installed inside a mounting box (complying to EN60670) and behind an accessory or blank plate that uses at least 2 screw fixing points to secure it to the mounting box. Failure to do so could result in a fire hazard or electric shock under extreme external fault conditions.

10 A / 230 VAC Basic	CSAU-01/01-10	172937	1
10 A / 230 VAC Local Input	CSAU-01/01-10I	172938	1
10 A / 230 VAC Local Input + Energy Measurement	CSAU-01/01-10IE	172939	1
16 A / 230 VAC Basic	CSAU-01/01-16	172940	1
16 A / 230 VAC Local Input	CSAU-01/01-16I	172941	1
16 A / 230 VAC Local Input + Energy Measurement	CSAU-01/01-16IE	172942	1

Switching Actuator potential-free

RF06010

- The „potential-free“ switching actuator receives signals and controls a variety of devices/systems such as ventilation, heating, alarm systems, etc. It is mains-supplied and can also switch voltages other than the supply voltage. The actuator can be incorporated into installation boxes for switches, branch-off boxes, standard installation boxes or directly into the cover of the light fixture.

It is absolutely necessary to pay attention to protective circuit page xx for any application using inductive loads (e.g. fluorescent lamps)!

8 A / 230 VAC	CSAU-01/02	240694	1

Version	Type Designation	Article No.	Pack (pcs.)

Switching Actuator potential-free, push-button function

RF05110

- The „Switching actuator - potential-free with push-button function“ receives signals and can switch devices such as a door bell. A special feature of this product is that only the “push-button function” will be used if an assignment is made in Basic Mode. This means that the output will only be switched as long as the assigned push-button/sensor is activated (function of the door-bell push-button). Also after a reset into the delivery status (Reset) and a new assignment of a push-button/sensor in Basic Mode, only the push-button function will be available. In Comfort Mode, all the functions known and wellproven will remain available. Power is supplied via the mains. It is also possible to switch types of voltage other than the mains voltage. The device can either be installed in a switch, branch-off or standard installation box, or directly inside the cover of the light fixture.

It is absolutely necessary to pay attention to protective circuit page xx for any application using inductive loads (e.g. fluorescent lamps)!

8 A / 230 VAC, push-button function Basic-Mode	CSAU-01/04	121080	1

Switching Actuator all-pole

RF05210

- The “all-pole” switching actuator receives signals and controls a variety of devices/systems such as lighting, ventilation, heating or alarm systems, etc. It is mains-supplied. Both the phase and the neutral conductor are being switched. The actuator can be incorporated into installation boxes for switches, branch-off boxes, standard installation boxes or directly into the cover of the light fixture.

It is absolutely necessary to pay attention to protective circuit page xx for any application using inductive loads (e.g. fluorescent lamps)!

6 A / 230 VAC	CSAU-01/03	240695	1

Shutter Actuator – Slim Design

wa_ren_rf_00721

- The flush-mounted shutter actuators are particularly characterized by their slim dimensions and extended control functionality. The actuator control drives of shutters, blinds, shades etc. which are equipped with a 230 V AC motor (up to 3 A) and an integrated end-position switch. The device tracks the actual position of the shades and has predefined, selectable profiles to optimize the operation of the to be controlled application, e.g. shutters, slatted blinds, awnings etc. Furthermore, the actuator also provides numerous safety functions such as a safety position in case of wind and / or rain as well as a lockout protection to ensure shutters or blinds will not close if the terrace door is open. The mains-powered solution is typically placed in an installation box and combined with a wireless switch or behind a socket outlet or conventional switch.
- The two optional 230 V AC local input sensors enable the actuator to be used with an existing or any other mechanical push-switch available on the market.

Never connect multiple shading motors in parallel to a single shutter actuator without integrating a cut-off relay.

Shutter actuator, slim design, 3 A / 230 V AC	CJAU-01/04	EP-500362
Shutter actuator, slim design, 3 A / 230 V AC, with local inputs	CJAU-01/04-I	EP-500363

Version	Type Designation	Article No.	Pack (pcs.)

Shutter Actuator

RF05010

- Important!: This is a first generation Shutter actuator and we strongly recommend to use instead the latest generation slim Shutter actuator (CJAU-01/04, Y7-500362) which has a low stand-by power and that is also available with local inputs (CJAUE-01/04-I, Y 5003637-) and as plug-type (CJAE-01/01, Y7-500364).
- The shutters/blinds actuator receives signals and controls drives of shutters and blinds with 230V motors featuring an integrated limit switch. This actuator also offers 2 safety functions (e.g. safety position in case of wind and/or rain, lock-out protection to make sure that the shutter or blind will not close as long as the terrace door is open). Note: Never connect several shading motors in parallel to one blinds actuator without incorporating a cut-off relay. Power is supplied from the mains. Install the device in a switch or branch-off box.

It is absolutely necessary to pay attention to protective circuit page xx for any application using inductive loads (e.g. fluorescent lamps)!

6 A / 230 VAC	CJAU-01/02	240696	1

Smart Dimming Actuator

rf00715

- This generation Dimming Actuators is characterized particularly by its small dimensions, robustness, reduced Power Consumption and extended functionality. Due to the smart dimming technology this Dimming Actuator can dim a large variety of loads without flickering, flashing, LED glow or audible noise. Dims even the smallest LED load, starting from 0 W. Easy to select or define a DIM profile for the best dim performance. Also capable to switch non-dimmable loads (On/Off). It can be directly controlled by switches, sensors and Smart Devices. Short circuit, Overload and over temperature protected.
  The device can easily be mounted in installation boxes for switches, branch-off boxes or standard installation boxes, or directly inside the cover of the light fixture.
- **Local Input Sensor 230 VAC**
  The two extra local Input Sensors gives the opportunity to use any market available push switch directly in combination with the Actuator. Can be used in single or two push switch mode. In single push switch mode the second input can be used to control a second actuator. Can perfectly used with existing Motion Sensors. Like a standard Binary Input Device the inputs can also be assigned to other devices to send switching signals.
- **Integrated Energy Measurement with Load Fault Indication**
  The internal „Energy Sensor“ is used to measure and record the energy consumption of the connected load. Like a standard Energy Measurement Sensor it can be assigned directly to a Smart Device like the Smart Home Controller to monitor and manage the power (W) and energy (kWh) consumption. The additional Load Error Detection status can be used to signal a failure of the switched load based on a load beneath the definable minimum consuming power.
  Attention: The device is not calibrated, it is therefore not suitable for invoicing purposes!
- **Extended Status Messaging (routable)**
  This Device supports the Extended Status Messaging format for high status reliability and additional status information in combination with Smart Devices like the Smart Home Controller.

0-250 W / 230 VAC, Basic	CDAU-01/04	182443	1
0-250 W / 230 VAC, Binary Input	CDAU-01/04-I	182444	1
0-250 W / 230 VAC, Energy Meter Sensor	CDAU-01/04-E	182445	1

Version	Type Designation	Article No.	Pack (pcs.)

Heating Actuator

rf00715

- Heating Actuator for efficient and smooth temperature control based on Pulse Width Modulation (PWM) for electrical heating. Small design for installation behind wall sockets or in junction boxes. Works in combination with wireless temperature sensors or a smart device (Smart Home Controller). Easy to select the type of heating with predefined Heating profiles. Integrated Energy Measurement. Supports wireless floor temperature sensor for overheat protection. Emergency operation mode in case of temperature sensor failure. Energy efficient.
- **Heating Actuators 10 A and 16 A heavy duty**
  Heavy duty version based on the Eaton Patented Hybrid long life high performance switching technology. Suitable for all electric heating cables, foil and panels.
- **Heating Actuator 1 A silent**
  Silent version (no switching sound) suitable for thermoelectric valve drives.
- **Integrated Energy Measurement with real time average power indication (SHC)**
  The internal „Energy Sensor“ is used to measure and record the energy consumption of the connected load. Like a standard Energy Measurement Sensor it can be assigned directly to a Smart Device like the Smart Home Controller to monitor and manage the power (W) and energy (kWh) consumption. See real time the average power used to heat the room. The additional Load Error Detection status can be used to signal a failure of the switched load based on a load beneath the definable minimum consuming power.
  Attention: The device is not calibrated, it is therefore not suitable for invoicing purposes!
- **Integrated Protection**
  Integrated floor under- and overheating protection in case a wireless floor temperature sensor is connected (Only via MRF). Emergency mode in case of sensor or communication failure (20 %).
- **Extended Status Messaging (routable)**
  This device supports the Extended Status Messaging format for high status reliability and additional status information in combination with Smart Devices like the Smart Home Controller.

10 A / 230 VAC, Energy Meter Sensor	CHAU-01/01-10E	194372	1
16 A / 230 VAC, Energy Meter Sensor	CHAU-01/01-16E	194373	1
1 A / 230 VAC, Silent, Energy Meter Sensor	CHAU-01/01-1ES	194374	1

Router

RF03413

- This generation Router is characterized particularly by its small dimensions and enhanced functionality. The router is used to extend the xComfort RF Network on spots where no Actuator (with internal router functionality) is needed or installed. The device can be mounted in boxes for switches, in branch-off boxes or standard installation boxes.
- **CROU-00/01-SL: Router + Logic**
  For small solutions the Router with internal Logic functionality can be used. Up to 5 Logic Functions can be programmed via MRF. Each Logic Function can combine conditions and analog values to switch an Actuator if the Logic Operation is true.

Router Standard	CROU-00/01-S	172943	1
Router + Logic	CROU-00/01-SL	172944	1

Version	Type Designation	Article No.	Pack (pcs.)

Energy Meter Sensor PHASE OUT

RF05410

- The „energy sensor“ is used to record the solar energy converted in the PV inverter and to forward this information to the Room-Manager equipped with „Energy management function“. This type of device is used for capacities of 3-3680W. It is used to determine current (A), voltage (V), power (kW) and energy (kWh). The „energy sensor“ is preferably connected at the feeding point in the electrical system. The device is mounted in the switch box, the branch-off box, or the installation box.
- Attention: The device is not calibrated, it is therefore not suitable for invoicing purposes!
- 2.5 mm² connecting wires

It is absolutely necessary to pay attention to protective circuit page xx for any application using inductive loads (e.g. fluorescent lamps)!

0.42 VA / 230 VAC, Measuring range 3-3680 W (max. 16 A)	CEMU-01/04	136477	1

Energy Meter Sensor with external sensor PHASE OUT

RF06510

- The „energy sensor with external sensor“ is used to record the solar energy converted in the PV inverter and to forward this information to the Room-Manager equipped with „Energy management function“. This type of device is used for larger capacities of 15W - 23kW. It is used to determine current (A), voltage (V), power (kW) and energy (kWh). The energy sensor's external sensor is connected through the supply line, preferably at the feeding point in the electrical system. The device is mounted in the switch box, the branch-off box, or the installation box.
- Attention: The device is not calibrated, it is therefore not suitable for invoicing purposes!

It is absolutely necessary to pay attention to protective circuit page xx for any application using inductive loads (e.g. fluorescent lamps)!

0.42 VA / 230 VAC, Measuring range externer Sensor 15 W - 23 kW (max. 100 A)	CEMU-01/03	136476	1

Version	Type Designation	Article No.	Pack (pcs.)

Binary Input Unit 2x 230 VAC

rf00515

- This generation Binary Input is characterized particularly by its small dimensions and reduced Power Consumption. The Binary Input transmits input signals e.g. from window contacts, motion detectors or other signal contacts (relays, switches, Push Switches, pushbutton, etc.) to the convenient electrical installation system. Power supply is from the mains.

2x 230 VAC	CBEU-02/03	182450	1

Binary Input Unit 2x Signal contact

RF06410

- The binary input unit transmits input signals e.g. from window contacts, glass breakage sensors or other signal contacts (relays, switches, pushbutton units, etc) to the convenient electrical installation system. The device is powered by a coin cell (CR2477N). Therefore it can be conveniently attached (screw-mounted or glued) in any place. Placing it in installation boxes for switches, in branch-off boxes or standard installation boxes is also possible.
- Battery included.

2x Signal contact	CBEU-02/02	265627	1

Temperature Input Unit

wa_rf05813

- The temperature input unit registers temperatures by means of a temperature sensor (265643) and transmits this information to the convenient electrical installation system. It is also capable of simple control operations, such as controlling the shading of conservatories. The device can be mounted in installation boxes for switches, branch-off boxes or standard installation boxes. The device is powered by a coin cell (CR2477N). Therefore it can be conveniently attached (screw-mounted or glued) in any place.
- Attention: To precisely measure and display the values, please use the reference measuring device to determine the difference and then adjust the “offset” in the MRF.
- Battery included.
- Temperature sensor not included.

2x -50 to 180 °C	CTEU-02/01	265628	1

Version	Type Designation	Article No.	Pack (pcs.)

LeakageStop– Universal

wa_ren_rf_00321 + wa_ren_rf_00521

- The xComfort LeakageStop – Universal is a smart solution that detects water (leakages), emits an acoustic alarm and controls a wire-connected solenoid valve (NO or NC-type) to shut off the supply of water.
  The LeakageStop– Universal is 230 V AC 50 Hz mains-powered and can be mounted in an installation box. Its 55 x 55 mm design is compatible with leading WA brand frames. The device supports both on-wall and in-wall wiring.
  The LeakageStop – Universal detects water either via its onboard water sensor (single spot) or by means of an external water-sensor cable, adhesive flat-cable. The sensor unit can be mounted at some distance (max. 30m) from the main device by using a 2-wire cable.
  The device’s pushbuttons are used to operate the device, for example to acknowledge and switch off the acoustic alarm or to reopen a valve following no further water detection. The device also features a multicolor LED ring to indicate the different states. Furthermore, an instruction sticker is also part of the delivery.
  The LeakageStop can be wirelessly connected to wireless pushbuttons for easy operation. They can be mounted wherever required. The wirelessly connected pushbuttons feature the same range of functions provided by the on-device pushbuttons.
  Furthermore, the LeakageStop can be wirelessly connected to additional LeakageStop detector units to protect a large area or multiple rooms.
  The LeakageStop – Universal can also be exclusively used as an actuator or a detector. In actuator configuration the water detection is handled by one or multiple external wireless water detection devices – the main unit only serves to emit alerts and to control the solenoid valve. As detector, on the other hand, the unit emits alarms and provides wireless the current water detection status.
  Optional to configure via xComfort Bridge the device has an integrated lime blockage protection function and the possibility to power-off appliances via connected switching actuators.
  As part of the xComfort family, the LeakageStop can easily be wirelessly connected to the xComfort Bridge to offer additional connected home functions, e.g. closing a valve when leaving home or monitoring and control via smartphone.
- Attention! The solenoid valve is not included. The solution supports 230 V AC, 50 Hz max., 100 W solenoid valves.
- Note: The xComfort LeakageStop Universal is not supported by MRF and SHC
- The scope of delivery includes the instruction sticker, a sensor connection unit, the connecting cable (2 m) for the solenoid valve, one 2-wire cable (1.5 m), the flat sensor cable (3 m) and mounting material for the sensor unit: screws, dowels, and adhesive tape.

LeakageStop – Universal, 230 V AC, pure white, gloss	CWGE-0U/31	EP-500533
Cover for LeakageStop 230 V AC, alpine white, matt	CWGZ-CM/07	EP-502613
Cover for LeakageStop 230 V AC, silver, matt	CWGZ-CM/03	EP-500534
Cover for LeakageStop 230 V AC, jet black, matt	CWGZ-CM/09	EP-500535
Cover for LeakageStop – Sensor unit, silver, matt	CWGZ-CS/03	EP-500540
Cover for LeakageStop – Sensor unit, jet black, matt	CWGZ-CS/09	EP-500541
LeakageStop – Cable to connect 2nd solenoid valve, 2 m + 0.5 m	CMMZ-00/48	EP-500546
Water sensor cable. Adhesive flat-cable (3m) with 2-wire connection cable (1m)	CSEZ-01/37	306131
(spare) LeakageStop – Sensor connection unit, pure white, matt	CWGZ-0S/01	EP-500539
(spare) Water sensor cable. Adhesive flat-cable (3m) with connector	CSEZ-01/38	EP-500545

Version	Type Designation	Article No.	Pack (pcs.)

Push-button Unit universal 55x55 mm, without LED

RF10610

- When pressed, the push-button unit transmits a signal to the actuators of the convenient electrical installation system. No distinction is required between a dimmer switch or change-over switch, intermediate switch or blinds switch, etc. The device is powered by a coin cell (CR2450). Therefore it can be conveniently attached (screw-mounted or glued) wherever needed. Thanks to the flat design NO installation box or branch-off box is required. The push-button is compatible with several 55x55 mm wall switches. You find the compatibility list in chapter “Technical data” on page xx.
  Frames and rockers are available in white, cream, anthracite and black. See page xx.
- Battery included.

Single	CTAA-01/04	125969	1
Double	CTAA-02/04	126030	1
Quad	CTAA-04/04	126031	1

Version	Type Designation	Article No.	Pack (pcs.)

Multifunctional pushbutton unit, 55x55 mm

RF10610

- This multifunctional pushbutton unit has the same design and function as the standard wireless pushbutton, but in addition, it also comes with a temperature and a humidity sensor to measure the climate conditions inside the room.
- The functionality is the same as that of the standard pushbutton; when pressed, it transmits wireless control signals to a connected actuator or controller, for example an xComfort device. The pushbutton can be used as a dimmer or change-over switch, additional switch, blinds switch, etc.
- Moreover, temperature and humidity readings are available for use with xComfort Bridge, for example in heating mode to control the room temperature.
- The device is powered by a coin cell (CR2450) and can therefore be conveniently attached (screw-mounted or glued) wherever needed. Thanks to the flat design, no installation box or branch-off box is required. The pushbutton is compatible with various 55x55 mm wiring accessories. For the compatibility list, see the “Technical data” chapter on page xx. Frames and rockers are available in different colors, finishes and with imprints. See page xx.
- Battery included.

Single	CTSA-01/04	EP-500380	1
Double	CTSA-02/04	EP-500381	1
Quad	CTSA-04/04	EP-500382	1

Version	Type Designation	Article No.	Pack (pcs.)

Room Controller Touch

wa_rf00217

rf00117

- The Room Controller Touch with temperature and humidity sensor is an excellent choice to monitor and control the climate in a room either stand-alone or together with an intelligent device (e.g. xComfort Smart Home Controller (SHC) and xComfort Bridge). Its touch display with backlight function offers an intuitive interface for the daily use.
  The user (re-)programmable Week Program Timer and the 4 Operation Modes temperatures, also user (re-)programmable, offer maximum flexibility to meet the specific room climate needs.
  The Room Controller Touch supports floor temperature control (min and max level) by connecting an external wired floor temperature sensor (PT1000).
  Its two optional touch-buttons on the display can be used to control other xComfort functions, for example a Switching or Dimming actuator for the lights, a Shutters/Blinds actuator or Scenes in the xComfort SHC and xComfort Bridge.
  Thanks to the universal 55x55mm design of the Room Controller Touch it can be combined with frames from the switch industry (observe the compatibility list).
  The device is battery powered and through its flat design NO switch, branch or installation box is required, therefore it can be easily mounted anywhere (screwed and/or stick on) and on each surface.
  Power is supplied via two AAA batteries, but it is also possible to use, as alternative, the optional external mains power adapter.
  Adding comfort both for the user (daily operation and monitoring) and professional (full wireless) makes this device a perfect choice.
- Attention: The Room Controller Touch must not be used for safety installation and safety relevant functions like safety (floor) temperature switches.
- Attention: To precisely measure and display the values, please use the reference measuring device to determine the difference and then adjust the “offset” in the MRF.
- Batteries are included in the scope of delivery.

Universal: For use with xComfort Bridge

Pure white, gloss	CRCA-00/08	187708	1
Anthracite	CRCA-00/09	187709	1
Traffic white, gloss	CRCA-00/10	187710	1
Alpine white, gloss	CRCA-00/11	187711	1
Signal white, gloss	CRCA-00/12	193911	1
Jet black, matt	CRCA-00/13	195246	1
Silver, matt	CRCA-00/14	304416	1
Alpine white, matt	CRCA-00/15	EP-502110	1

Legacy: For use with xComfort Smart Home Controller and Switching actuator

Pure white, gloss	CRCA-01/08	EP-500832	1
Anthracite	CRCA-01/09	EP-500833	1
Traffic white, gloss	CRCA-01/10	EP-500834	1
Alpine white, gloss	CRCA-01/11	EP-500835	1
Signal white, gloss	CRCA-01/12	EP-500836	1
Jet black, matt	CRCA-01/13	EP-500837	1
Silver, matt	CRCA-01/14	EP-500838	1

Version	Type Designation	Article No.	Pack (pcs.)

xComfort Bridge

rf00219_r

wa_rf00119

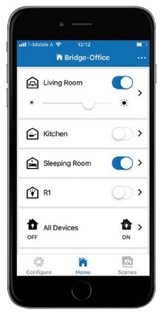

With the xComfort Bridge, the Smart Home becomes simple and user-friendly in all respects, starting with installation, doing configuration and daily operation. No additional configuration software or programming knowledge is required. After the installation of the actuators and sensors by the electrician, all further steps can also be completed easily and intuitively by the end user with the smartphone app.
Via xComfort Bridge App, the following Bridge functions are available (as of July 2022):
- Wirelessly configure and control devices such as switching, dimming and shutter actuators, push-buttons and other sensors at device level, zone level, via scenes You can simply scan them or have the app search for new devices in a few simple steps.
- Lighting control incl. time control and astronomical function
- Heating control
- Cooling control (from Q4/2022)
- Shading control
- Users with different rights
- Secure remote access via internet
- Cloud backup & restore function
- Amazon Alexa & Google home connectivity
The xComfort Bridge is connected to the local network via an Ethernet LAN cable to the local WiFi router. It can then be controlled remotely using the xComfort Bridge app on iOS (iPhone, iPad, iPod) or Android devices (smartphone, tablet).
Built-in LEDs inform about the status and function of the controller. The xComfort Bridge can be mounted on any wall, on a junction box or on an flush box. A set of rubber feet (included) also allows the control to be placed on any horizontal surface without slipping.

- Included in the package: Mounting brackets, rubber feet, USB adapter, micro USB cable, UTP LAN cable, screws, dowels and adhesive tape.

xComfort Bridge, 5 VDC, <0,5 W	CBCA-00/01	196811	1

Version	Type Designation	Article No.	Pack (pcs.)

Smart Home Controller PHASE OUT

RF00113

wa_rf00113

Example: Operation and display via iPhone APP

- The „Smart Home Controller“ is the most innovative product within the xComfort series and enables all functions of a modern electrical installation, e.g. central display and operation, lighting, shading, energy monitoring, temperature regulation, scenarios, IP cameras, macros etc. You will need a LAN cable to connect the Smart Home Controller to a (WLAN) router. Depending on the network in place, you can access the Smart Home Controller and the xComfort system via Smart Phone, Smart TV (complete browser), PC, laptop, tablets etc. either „locally“ via WLAN, or „remote“ via the Internet. For intuitive controlling, operating and displaying the system, an iOS APP (iPhone, iPad, iPod), an Android APP (Smartphone, tablets) as well as a Web browser (mobile devices, Desktop, PC, laptop, ...) is available. Various status LEDs on the device provide information on the functioning and status of the device, of the system or of the connection for communication (see Technical Section). For configuration purposes you will need the Eaton RF Software 2.19 or a more recent version, and a Web browser for the configuration Web interface incorporated in the Smart Home Controller. After a basic configuration through that interface, the display and the user interface for the APPs and the Web browser will automatically be generated. The device can be surface-mounted on the wall or in a 55 mm or 68 mm switch-, branch-off or installation box. But it can also be used as a stationary device if the supporting feet included in the scope of delivery are used. A setting for remote notification to be sent as an e-mail or via a “Clickatell-SMS-Service“ subject to a fee is possible in case of certain incidents. Power supply is based on a plug-in power supply unit included in the scope of delivery. A LAN network cable is also included in the scope of delivery.
- **General information:**
  - Zones for individual definition by the user (functional areas)
  - Max. 99 data points (via an internal RF interface)
  - For convenience and memory capacity reasons of mobile devices, the total number of data points and zones is limited to the typical needs in private homes (or buildings of similar size).
  - IP address can be read using the Eaton RF configuration software
- **Functions:**
  - **Room climate:** 1-step heating/cooling, time/temperature programme can be set, display of set / real temperature, selection of operating modes, integration of window contacts
  - **Status & operation:** Display of statuses (binary values, temperatures, humidity, brightness, ...) or operation of electrical consumers (lighting, shading …), overview of the number of active lights and open doors and windows
  - **Shading:** Manual and automatic control, time programme for individual setting, astronomical clock, reacting to light or room-temperature sensors
  - **Energie Sensor Monitoring:** Easy graphic display in diagrams, real-time and historic values, time range to be selected, display of the 5 major consumers
  - **Time:** Change to and from daylight-saving time automatically; time synchronization by internet
  - **Scenarios:** Individual user-definition in the APP/Web browser
  - **Display of cameras:** Pictures of IP camera brands such as Axis, Panasonic, Mobotix, Sercomm are displayed in intervals of 5 secs
  - **Macros (Logics):** Individual configuration of processes is possible, but there is no application support available from Eaton due to the complexity this might imply
  - **E-mail notification function:** Individually defined text messages can be sent to any e-mail addresses
  - **SMS notification:** Via “Clickatell-SMS-Service“ subject to a fee (www.clickatell.com)
- **Remote Access Free of charge:**
  - Free Software Updates
  - Free secured Remote Access for remote control
  - Remote Camera access (based on fair use policy)
  - Remote configuration and diagnosis for specialist staff
- **User interfaces:**
  - Mobile APPs for iOS and Android devices (Smartphones, Tablets)
  - Web browser (Smartphones, Tablets, PC, Laptops)
- **User administration:**
  - Individuals enjoying administrator rights have access to a configuration Web interface (necessary for defining macros)
  - Individuals enjoying extended user rights can change values (set-values, times) and define scenarios
  - Basic users can see sensor values; they can influence lights, blinds and the heating; and they can call up scenarios and macros.

For SHC projects with ECI’s please read FAQ on eaton.eu/xcomfort before ordering!

5 VDC, 2 W	CHCA-00/01	171230	1

Version	Type Designation	Article No.	Pack (pcs.)

Ethernet Communication Interface ECI

RF08611

- The ECI Ethernet Communication Interface has been designed for interconnection purposes in large xComfort systems, with the ECIs being interconnected via a LAN network (either an existing or an additional LAN network). The ECIs also communicate with the xComfort RF system. Depending on the application, the ECIs can be configured as a LAN router or as an area node. Where xComfort routing is not possible, LAN routing can be used. If individual floor levels using xComfort should be interconnected via LAN, the ECIs can also be used as area nodes. To start up the system you will need the MRF 2.0 or a later version. A system integration for 3rd party applications is also possible, e.g. a central hotel software. The interface can be wall-mounted using a mounting base plate. General settings and a software update for the ECIs can be done using a web server. Depending on the type of ECI, there are different options for power supply.
- ECI LAN: can be supplied through an external 5-24VDC mains adapter with a TRS connector (118809) or a mini USB (155449). There is a switch on the device allowing to choose the supply via a TRS (tip, ring, sleeve) connector or a mini USB. Alternatively, in case of system integrations, both types of ECI can be directly supplied through a mini USB. ATTENTION: A mini USB can be used for power supply ONLY, NOT for data transmission! Any mains adapters or mini USB cables you may need are NOT included in the scope of delivery!
  A 0.5 m LAN cable is included in the scope of delivery.
- For an ECI PoE, power supply is provided through the LAN network ONLY.
  There is NO other supply option possible or necessary.

2.5 W, 5-24 VDC, LAN	CCIA-02/01	155447	1
2.5 W, 36-57 VDC PoE, LAN	CCIA-03/01	155448	1

Plug-type Mains Adapter with Mini USB Connector

RF01512, RF01812

- USB cable is included in scope of delivery

100-240 VAC, 50-60 Hz / 5 VDC / 1 A, EU	CMMZ-00/32	155449	1

Version	Type Designation	Article No.	Pack (pcs.)

Cable: USB A / Mini USB

RF01812

1 m	CMMZ-00/34	155451	1

RF Radiator Thermostat

rf02018_r

- Battery powered xComfort RF compatible Radiator Thermostat suitable to control water based radiators automatically. Can be used stand-alone or in combination with the SHC Climate Function for zone based climate control. Ideal for energy saving and increasing comfort. Large illuminated display and buttons for easy control. Child lock. Easy mounting. Batteries 2x 1.5 V (LR6/Mignon/AA) included..
- **Supported valve types: M30 x 1.5 mm**
  Heimeier, Junkers Landy + Gyr, MNG, Honeywell-Braukmann, Oventrop, Schlösser, Sipmolex, Valf Sanayii, Metrik Maxitrol, Watts, Wingenroth (Wiroflex), R.B.M., Jaga, Siemens, Idmar)
- **Included Adapters**
  Danfossl RAV 34 mm + pin, Danfoss RA 20 mm or 23 mm, Danfoss RAVL 26 mm
- **Available Adapters**
  Herz, Comap, Markaryds, RA (Tour & Andersson)

RF Radiator Thermostat	CHVZ-01/05	195213	1
Adapter Herz	CMMZ-00/41	195214	1
Adapter TA	CMMZ-00/42	195215	1
Adapter Comap	CMMZ-00/43	195216	1
Adapter Markaryds	CMMZ-00/44	195217	1

Version	Type Designation	Article No.	Pack (pcs.)

Switching Plug

rf01718_r, rf01818_r, rf01618_r, rf01918_r, rf02718_r

- Switching Plug with Multi-functional Button and EMS Multi-color status LED. Can be plugged directly into an existing wall outlet without any wiring work. Eaton Patented Hybrid switching technology (Long Life) for high switching performance. Easy to combine with wireless switches to switch a variety of loads such as floor-standing lamps, fans, audio and video appliances, living room fountains, aquaria, etc. Integrated Energy Measurement.
- **Multi-functional Button with EMS Multi-color status LED**
  Control the load directly with the local button. Based on the settings the button color indicates the real time power usage, the output status or just off for dark rooms. The status LED indicates Overload and Load error conditions also.
- **Integrated Energy Measurement**
  The internal „Energy Sensor“ is used to measure and record the energy consumption of the connected load. Like a standard Energy Measurement Sensor it can be assigned directly to a Smart Device like the Smart Home Controller to monitor and manage the power (W) and energy (kWh) consumption. The additional Load Error Detection status can be used to signal a failure of the switched load based on a load beneath the definable minimum consuming power.
  Attention: The device is not calibrated, it is therefore not suitable for invoicing purposes!
- **Extended Status Messaging (routable)**
  This device supports the Extended Status Messaging format for high status reliability and additional status information in combination with Smart Devices like the Smart Home Controller.

F-Type, side earthing	CSAP-01/F5-12E	195168	1
E-Type, earthing pin	CSAP-01/E5-12E	195169	1
J-Type, S13	CSAP-01/J5-12E	195171	1
F-Type, side earthing, grey	CSAP-01/Fa-12E	195826	1

Dimming Plug

rf01718_r, rf01818_r, rf01618_r, rf01918_r, rf02718_r

- Smart Dimming Plug with Multi-functional Button and EMS Multi-color status LED. Can be plugged directly into an existing wall outlet without any wiring work. Eaton Smart Dimming technology with overload protection and Auto trailing / leading edge mode. Able to dim a large variety of loads without flickering, flashing, LED glow or audible noise. Dims even the smallest LED load, starting from 0 W. Easy to select a DIM profile for the best dimming performance. Also capable to switch non-dimmable loads (On/Off). Easy to combine with wireless switches. Integrated Energy Measurement.
- **Multi-functional Button with EMS Multi-color status LED**
  Control the load directly with the local button. Based on the settings the button color indicates the real time power usage, the output status or just off for dark rooms. The status LED indicates Overload and Load error conditions also.
- **Integrated Energy Measurement**
  The internal „Energy Sensor“ is used to measure and record the energy consumption of the connected load. Like a standard Energy Measurement Sensor it can be assigned directly to a Smart Device like the Smart Home Controller to monitor and manage the power (W) and energy (kWh) consumption. The additional Load Error Detection status can be used to signal a failure of the switched load based on a load beneath the definable minimum consuming power.
  Attention: The device is not calibrated, it is therefore not suitable for invoicing purposes!
- **Extended Status Messaging (routable)**
  This device supports the Extended Status Messaging format for high status reliability and additional status information in combination with Smart Devices like the Smart Home Controller.

F-Type, side earthing	CDAP-01/F5-1E	195172	1
E-Type, earthing pin	CDAP-01/E5-1E	195173	1
J-Type, S13	CDAP-01/J5-1E	195175	1
F-Type, side earthing, grey	CDAP-01/Fa-1E	195827	1

Version	Type Designation	Article No.	Pack (pcs.)

Heating Plug

rf01718_r, rf01818_r, rf01618_r, rf01918_r, rf02718_r

- Heating Plug with Multi-functional Button and EMS Multi-color status LED, suitable for all electric heaters and panels. Can be plugged directly into an existing wall outlet without any wiring work. Works in combination with wireless temperature sensors or a smart device (Smart Home Controller). Easy to select the type of heating with predefined Heating profiles. Hybrid switching technology (Long Life) for high switching performance. Efficient and smooth temperature control based on Pulse Width Modulation (PWM). Integrated Energy Measurement. Supports wireless floor temperature sensor for overheat protection. Emergency operation mode in case of temperature sensor failure. Energy efficient. Integrated Energy Measurement.
- **Multi-functional Button with EMS Multi-color status LED**
  Local button for boost function. Based on the settings the button color indicates the real time average power usage, the output status or just off for dark rooms. The status LED indicates Overload, Load error and Emergency mode (sensor failure) conditions also.
- **Integrated Energy Measurement**
  The internal „Energy Sensor“ is used to measure and record the energy consumption of the connected load. Like a standard Energy Measurement Sensor it can be assigned directly to a Smart Device like the Smart Home Controller to monitor and manage the power (W) and energy (kWh) consumption. See real time the average power used to heat the room. The additional Load Error Detection status can be used to signal a failure of the switched load based on a load beneath the definable minimum consuming power.
  Attention: The device is not calibrated, it is therefore not suitable for invoicing purposes!
- **Integrated Protection**
  Integrated floor under- and overheating protection in case a wireless floor temperature sensor is connected (Only via MRF). Emergency mode in case of sensor or communication failure (20 %).
- **Extended Status Messaging (routable)**
  This device supports the Extended Status Messaging format for high status reliability and additional status information in combination with Smart Devices like the Smart Home Controller.

F-Type, side earthing	CHAP-01/F5-12E	195176	1
E-Type, earthing pin	CHAP-01/E5-12E	195177	1
J-Type, S13	CHAP-01/J5-12E	195179	1
F-Type, side earthing, grey	CHAP-01/Fa-12E	195828	1

Version	Type Designation	Article No.	Pack (pcs.)

2 Channel Analogue Input PHASE OUT

RF03810

- Thanks to universal sensors (0-10 VDC, 0-20 mA, 4-20 mA) the 2-channel analogue input can receive different measuring values (e.g. air quality, humidity, direction of the wind etc.) or the temperature (PT1000 sensor, 265643) and transmit them to the convenient electrical installation system. Power is supplied by a separate 24 VDC power supply unit (110772 or 110773, not included in the scope of delivery!). The 24 VDC supply is looped through the analogue input twice and is therefore also available for the supply of the active sensors. The correct setting for each channel has to be carried out depending on the connected sensor. Attention: Carefully check max. load and correct power supply! The device can be mounted in a branch-off or installation box.
- Attention: To precisely measure and display the values, please use the reference measuring device to determine the difference and then adjust the "offset" in the MRF.

0-10 VDC, 0-20 mA, 4-20 mA, PT1000	CAEE-02/01	112240	1

Plug-Type Power Supply Unit for 2 Channel Analogue Input and Impulse Counting Input 2-way S0

wa_rf08213

IN: 90-264 VAC, OUT: 24 W / 24 VDC, 47-63 Hz	CMMZ-00/12	110772	1

Flush-mounted Power Supply Unit for 2 Channel Analogue Input and Impulse Counting Input 2-way S0

RF06210

IN: 90-264 VAC, OUT: 18 W / 24 VDC, 47-63 Hz	CMMZ-00/13	110773	1

Version	Type Designation	Article No.	Pack (pcs.)

Analogue Actuator 0-10 VDC

RF03710

- The analogue actuator receives signals, switches a relay and provides an output voltage of 0-10 VDC for terminals such as mixers, heating, ventilation, dimmers, etc. The device is mains-supplied and can be incorporated into installation boxes, intermediate ceilings or directly into the devices to be controlled.

8 A / 230 VAC, 20 mA / 0-10 VDC	CAAE-01/01	240697	1

Analogue Actuator 1-10 VDC

RF03610

- The analogue actuator receives signals, switches a relay and actuates a control voltage of 1-10 VDC for dimmers and electronic ballasts of fluorescent lamps. It is mains-supplied and can be incorporated into an installation box, an intermediate ceiling or directly into fluorescent lamps.
- CAAE-01/02: Dim level 0-100 %

8 A / 230 VAC, 20 mA / 1-10 VDC	CAAE-01/02	240698	1

Shutter Actuator – Plug-Type

wa_ren_rf_01021

- The plug-type shutter actuator is equipped with commonly used Hirschmann STAS-3 and STAK-3 connectors. Featuring IP44 protection and a broad operating temperature range, they allow for individual placement and easy installation. The actuator control drives of shutters, blinds, shades etc. which are equipped with a 230 V AC motor (up to 3 A) and an integrated end-position switch. The device tracks the actual position of the shades and has predefined, selectable profiles to optimize the operation of the to be controlled application, e.g. shutters, slatted blinds, awnings etc. Furthermore, the actuator also provides numerous safety functions such as a safety position in case of wind and / or rain as well as a lock-out protection to ensure shutters or blinds will not close if the terrace door is open. Power is supplied from the mains.

Never connect multiple shading motors in parallel to a single shutter actuator without integrating a cut-off relay.

Shutter actuator, plug-type, 3 A / 230 V AC	CJAE-01/01	EP-500364
STAS-3 connector (load) for shutter actuator	CMMZ-00/51	EP-500365
STAK-3 connector (mains) for shutter actuator	CMMZ-00/52	EP-500366

Version	Type Designation	Article No.	Pack (pcs.)

Smart Dimming Actuator

rf00915

- This generation Dimming Actuators is characterized particularly by its small dimensions, robustness, reduced Power Consumption and extended functionality. Due to the smart dimming technology this Dimming Actuator can dim a large variety of loads without flickering, flashing, LED glow or audible noise. Dims even the smallest LED load, starting from 0 W. Easy to select or define a DIM profile for the best dim performance. Also capable to switch non-dimmable loads (On/Off). It can be directly controlled by switches, sensors and Smart Devices. Short circuit, Overload and over temperature protected.
  The device can be installed in a branch-off or installation box, or directly in the intermediate ceiling.
- **Local Input Sensor 230 VAC**
  The two extra local Input Sensors gives the opportunity to use any market available push switch directly in combination with the Actuator. Can be used in single or two push switch mode. In single push switch mode the second input can be used to control a second actuator. Can perfectly used with existing Motion Sensors. Like a standard Binary Input Device the inputs can also be assigned to other devices to send switching signals.
- **Integrated Energy Measurement with Load Fault Indication**
  The internal „Energy Sensor" is used to measure and record the energy consumption of the connected load. Like a standard Energy Measurement Sensor it can be assigned directly to a Smart Device like the Smart Home Controller to monitor and manage the power (W) and energy (kWh) consumption. The additional Load Error Detection status can be used to signal a failure of the switched load based on a load beneath the definable minimum consuming power.
  Attention: The device is not calibrated, it is therefore not suitable for invoicing purposes!
- **Extended Status Messaging (routable)**
  This Device supports the Extended Status Messaging format for high status reliability and additional status information in combination with Smart Devices like the Smart Home Controller.

0-250 W / 230 VAC, Basic	CDAE-01/04	182446	1
0-500 W / 230 VAC, Binary Input	CDAE-01/05-I	182448	1
0-500 W / 230 VAC, Energy Measuring Sensor	CDAE-01/05-E	182449	1

Impulse Counting Input 2-way S0 PHASE OUT

RF03310

- The impulse counting input 2-way is used to register the consumption values of current, gas, water etc. via a "counting input with standardised S0 interface" and to then send these values to the Room Manager equipped with the energy management function for analysis and display purposes. Power is supplied via a separate 24 VDC power supply unit (110772 or 110773, not included in the scope of delivery!). The 24 VDC power supply needs to be looped through the impulse counting input 2-way and can therefore (if required) supply power for the counting input. Attention: Use S0 sensors only and make sure the wiring is correct! The device can be installed in the branch-off or installation box.

315 mA / 24V DC	CIZE-02/01	118799	1

Version	Type Designation	Article No.	Pack (pcs.)

Remote Control Alarm

RF08111

- The remote control equipped with a 1-channel alarm transmits a signal to the actuators of the xComfort electrical installation as soon as the alarm button is pressed. The mobile device is power-supplied by a coin cell battery (CR2430). It can be assigned to the safety function of the Room Manager in order to set off an alarm, for example. If the remote control equipped with a 1-channel alarm is assigned to an actuator, it works in the "current-pulse mode". A LED will tell the user whether the signal has been sent, and also whether it has been correctly understood and reconfirmed. The remote control is easy to fix at the key ring, key ribbon or at a hanger clip (not included in the scope of delivery). But it is also possible to use an optional magnet-type wall-fixing (110771 - to be ordered separately).
- Battery included.

1 channel (mini)	CHSZ-01/05	143807	1

2 Channel Remote Control

RF06710

- The 2 channel remote control sends signals to the convenient electrical installation system when it is operated. This mobile device is powered by a coin cell battery (CR2430). The functions can be individually assigned, with no distinction to be made between blinds control, dimming, switching etc. A LED indicates whether the signal has actually been sent, correctly interpreted and re-confirmed. The remote control can simply be fixed at the key ring (included in the scope of delivery). Optionally, wall-mounting via a magnet is possible too (110771 - to be ordered separately).
- Battery included.

2 channels (mini)	CHSZ-02/02	109383	1

12 Channel Remote Control

RF10210

- The 12 channel remote control sends signals to the convenient electrical installation system when it is operated. This mobile device is powered by two AAA batteries. The functions can be individually assigned, with no distinction to be made between blinds control, dimming, switching etc. Pushing the pre-selection key (1-6) once will take you to level 1 (channels 1 to 6), (short) pushing the pre-selection key (1-6) twice will take you to level 2 (channel 7-12). The two LEDs indicate the level and whether the signal has actually be sent, correctly interpreted and re-confirmed. Optionally, wall-mounting via a magnet is possible too (110771 - to be ordered separately).
- Battery included.

12 channels	CHSZ-12/03	109384	1

Version	Type Designation	Article No.	Pack (pcs.)

12 Channel Remote Control with Display

RF10310

- The 12 channel remote control with display enables the user to conveniently operate and control different functions such as lighting, shading etc. A total of 12 functions can be selected and operated on the display with blue background lighting. The names of the functions can either be freely defined or selected from among around 20 pre-defined names. An integrated clock shows the date and time, 3 timers can be individually set and assigned to one of the 12 functions. A password protection prevents unauthorized access to the setting possibilities. For a system update or for adding more functions use the IR interface integrated in the battery storage compartment. The yellow LED shows whether or not the signal has been sent, correctly understood and confirmed. The battery display will tell the user when it is time to change the batteries. Power for the mobile device is supplied via two AAA batteries. An optional wall-fixture via a magnet is available (110771 - needs to be ordered separately).
- Battery included.

12 channels with display	CHSZ-12/04	118803	1

Wall-Fixture for 1, 2 and 12 Channel Remote Control

RF06810

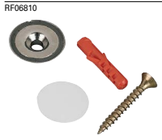

	CMMZ-00/11	110771	1

Version	Type Designation	Article No.	Pack (pcs.)

Universal Motion sensor

wa_ren_09919_I, wa_ren_10219_I,
wa_ren_10319_I, wa_ren_10119_I

- This true universal PIR based Motion sensor is designed to sense movement inside a building.

The Universal Motion sensor support up to 4 different mounting methods in one device.

- Ceiling recessed in a flush-box. Using the round front cover plate
- Surface mounted screwed. Using the round cover plate + the surface mount adapter
- Surface mounted glued with adhesive tape. Using the round cover plate + the surface mount adapter
- Recessed in a flush-box in combination with a universal 55x55 mm WA frame. Using the 55x55mm cover plate.

Power supply is provided either through a CR2450 battery or through mains power when battery-less installation is preferred.
The multicolor LED indicates during daily operation when the battery is low and should be replaced or when any other corrective action might be necessary.
The battery can be easily replaced without special tools (only a screw-driver is needed).
The universal mounting methods and its power supply options makes it possible to fix (screw or glue) the Motion sensor on any location
wherever you need it.
Through the on-device programing buttons and the multi-color LED the detection settings; Light conditions, Turn-off delay and Sensitivity can be simple adjust to match the specific application requirements. All the settings can be carried out directly on the device, by removing the front cover which is fixed by magnets to the base module.

- Battery, adhesive tapes, screws, dowels, 1.5mm² wires, both front cover plates and the surface mount adapter are included in the scope of delivery.

CBMD-02/01	Pure white	300918
CBMD-02/02	Jet Black	300919

55 X 55 mm front cover plate

CBMZ-02/31	Pure white, gloss	302351
CBMZ-02/35	Traffic white, gloss	302352
CBMZ-02/37	Alpine white, gloss	302354
CBMZ-02/38	Signal white, gloss	302355
CBMZ-02/03	Silver, matt	304418
CBMZ-02/04	Anthracite, matt	302356
CBMZ-02/07	Alpine white, matt	EP-502614
CBMZ-02/09	Jet black, matt	302357

Version	Type Designation	Article No.	Pack (pcs.)

PIR Motion Sensor PHASE OUT

RF04010

- This PIR motion sensor is designed to sense movement inside a building. Power supply is provided either through two AAA-batteries (included in the scope of delivery) or through a power supply unit (106291, not included in the scope of delivery), therefore it is easy to fix (screw or glue) it wherever you need it. To make it easy for you to do setting, we provide an adjustable "mounting support" (106292). Channel A (for lighting) transmits a switching command depending on the movement that has been detected, on the brightness and on the time-setting for the light to shut off again. Channel B (for alarm functions) transmits a switching command when movement is detected, irrespective of brightness and time-setting for switch-off (channel B is activated for approx. 145 seconds). The setting for the number of impulses to be analysed before triggering an alarm or transmitting a switching command can be done for both channels at the same time. All the settings can be carried out directly on the device, with the front cover removed. A light emitting diode (LED) makes the job of setting the sensor easier.

110°, 12 m with mounting height = 2.2 m	CBMA-02/01	104921	1

Power Supply Unit for the Motion Sensor PHASE OUT

RF06110

- The power supply unit is offered as an alternative for supplying the motion sensor (104921) with power. The batteries supplied with the motion sensor will not be necessary in that case. The "jumper" on the motion sensor needs to be set to external supply. The power supply unit is to be placed in the installation box.
- Attention: To be used for the CBMA-02/01 (104921) only!

230 VAC, 0.25 VA	CMMZ-00/08	106291	1

Mounting Set for the Motion Sensor PHASE OUT

RF01906

- The mounting set for the motion sensor is used where the sensor needs to be adjusted to different directions in order to guarantee an optimal area covered by the motion sensor (104921). (Two fixing screws are included).

white	CMMZ-00/09	106292	1

Door/Window Sensor

wa_rf05019_r, wa_rf04919_r
wa_rf05119_r, wa_rf05219_r

- The surface-mounted door/window sensor is used to monitor doors and windows. It is available in different colors to match any interior.
  The sensor is mounted on the window or door frame, while the magnet is attached to the movable part of the window or door. The sensor and the magnet can be secured with screws and/or adhesive tape. Spacers in the same color are also included to ensure flush mounting.
  The door/window sensor is battery-powered and uses a standard CR2 battery. The battery is easy to replace without any special tools (only a screwdriver is needed). The multi-color LED indicates when the battery is low and should be replaced, or if any other corrective action is necessary.
  Via a button on the device, users can select whether the ON command will be sent when the door/window is closed or open.
  The battery, adhesive tape, spacers and screws are included.

Warm white	CDWA-01/3a	300294	1
Bright white	CDWA-01/3b	300295	1
Grey	CDWA-01/3c	300296	1
Brown	CDWA-01/3d	300297	1

Version	Type Designation	Article No.	Pack (pcs.)

LeakageStop – Detector, battery

wa_ren_rf_00621

- The xComfort LeakageStop – Detector is a smart solution that detects water (leakages), emits an acoustic alarm and sends the information to a wirelessly connected controller.
  The LeakageStop – Detector is battery-powered (CR2477N) and can be mounted at any desired location or surface.
  The device supports water detection through the on-board water sensor (single spot) or an external water-sensor cable, adhesive flat-cable.
  Operation is carried out via the on-device pushbutton, e.g. to acknowledge an alarm and mute the acoustic alarm. The device is also equipped with a multicolor LED ring to indicate the different states. Furthermore, an instruction sticker is also part of the package.
  As part of the xComfort family, the Detector can easily be wirelessly connected to the xComfort LeakageStop – Universal or the xComfort Bridge to offer additional connected home functions such as monitoring and notification via smartphone.
  Note: The xComfort LeakageStop Detector is not supported by MRF and SHC
- The scope of delivery includes a flat water-sensor cable (3 m), a CR2477N battery, an instruction sticker and mounting material: screws, dowels, adhesive tape.

LeakageStop – Detector, battery, pure white, matt	CWGA-0D/01	EP-500536
Cover for LeakageStop – Detector, battery, silver, matt	CWGZ-CB/03	EP-500537
Cover for LeakageStop – Detector, battery, jet black, matt	CWGZ-CB/09	EP-500538
(spare) Water sensor cable. Adhesive flat-cable (3m) with connector	CSEZ-01/38	EP-500545

xComfort Weather Station

wa_rf01221_c

- The weather station with integrated xComfort RF provides data for shading control and comfort functions based on precise meteorological date like sunlight strength, rain, temperature and wind speed. For this the device is equipped with multiple sensors:
  - Wind speed sensor
  - Brightness (lux) in 3 directions
  - Rain sensor with integrated heating
  - Temperature
- The xComfort Weather Station provides the information which, for example but not limited to, are needed to protect, and control the shadings and blinds in combination with the xComfort Shutter actuators series and xComfort Bridge.
- Furthermore, with its wireless communication and brightness detection in 3 direction allows an easy installation on the best applicable location. The weather station is mains powered and with its transparent and UV-resistant housing design it is a fit for all façade types.

Weather station, 230 VAC	CWSA-04/01	EP-500527	1

Temperature Sensor

wa_rf03613

- The temperature sensor detects the temperature for the temperature input unit (265628). Depending on the application, the temperature sensor can be installed directly in immersion sleeves or combined with the living room enclosure (118802), outdoor enclosure (232284) and pipe-mounting unit (232283).

-50 to 180 °C	CSEZ-01/01	265643	1

Temperature Sensor

RF00114

- The temperature sensor of the sensing element has a special round design and less flexible cable, so it can be inserted into the tubes at any later date.

-50 to 200 °C	CSEZ-01/36	177263	1

Version	Type Designation	Article No.	Pack (pcs.)

Living Room Enclosure

RF02810

- The living room enclosure has been designed for using the temperature sensor (265643) for room temperature measurement.
- Temperature sensor not included.

84.5 x 84.5 x 25 mm	CSEZ-01/24	118802	1

Outdoor Enclosure

wa_rf03513

- The outdoor enclosure has been designed for using the temperature sensor (265643) for outdoor temperature measurement.
- Temperature sensor not included.

50 x 65 x 37.5 mm	EB-Z/SE/01/03	232284	1

Fix-to-Pipe Unit

wa_rf03313

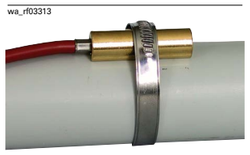

- The fix-to-pipe unit has been designed for using the temperature sensor (265643) for intake and return temperature measurement.
- Temperature sensor not included.

12 x 39 x 10.6 mm	EB-Z/SE/01/04	232283	1

Surface-mounted Window Contact

wa_rf06913

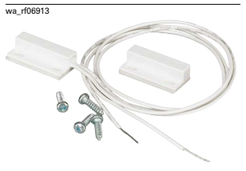

- The surface-mounted window contact is used for monitoring doors and windows. It is fixed on the window or door frame, while the magnet is fixed on the movable part of the window or door (wing of the window or door). The signal will be analysed through a 2x Signal contact binary input (265627) in mode 2. Using it with the 2x 230 VAC Binary input is NOT allowed! It can be fixed with adhesive tapes and/or screws (both included in the scope of delivery).

100 VDC, 0.5 A, normally open contact	CSEZ-01/06	104922	1
30 VDC, 0.2 A, normally closed contact	CSEZ-01/25	121790	1

Built-in Window Contact

wa_rf06813

- The built-in window contact is used for monitoring windows and doors. It is fixed on the window or door frame, while the magnet is fixed on the movable part of the window or door (wing of the window or door). The signal will be analysed through the 2x Signal contact binary input (265627) in mode 2. Using it with the 2x 230 VAC Binary input is NOT allowed! It has to be fixed in holes to be prepared for this purpose.

100 VDC, 0.5 A, normally open contact	CSEZ-01/07	104923	1

Version	Type Designation	Article No.	Pack (pcs.)

Valve Drive NC

RF00215

- The thermoelectric valve drive is used for controlling radiators, under-floor heating etc. For this purpose the device can be controlled via the Heating actuator 164333, the Switching actuator 265623, 172937 or the 125 W Dimming actuator 107778 (Attention: the 40-250 W Dimming actuator 109363 is not authorized for this purpose). The valve drive can simply be fitted on the 118866, 118887 and 182452 Adapter rings. ATTENTION: Adapters need to be ordered separately depending on the fixtures you use, so they are not part of the scope of delivery! The switching status, i.e. whether the valve is open or closed, and the adjustment check while bringing the device into service are visually displayed. If the valve drive is not energized, the valve is closed (except in the delivery status of the device - First Open Function).
  Information: The valve will only be switched, but there is no permanent control provided!

1 W, 230 VAC, normally closed contact	CHVZ-01/04	179678	1

Adapter 1 for Radiator Valve

wa_rf09313

wa_rf09213

rf00415

- Danfoss RA

• Danfoss RA	CMMZ-00/17	118866	1
• Beulco (as of 2006), SBK (as of 1998), Cazzaniga, Dumser, Heimeier, Honeywell, IVAR, MNG (as of 1998), ONDA, Ovendrop, Reich (distribution), Schlösser, Siemens, Taco	CMMZ-00/18	118867	1
• Tour & Andersson, Nereus Type 9440 (angle valve) • Thead: M28 x 1.5	CMMZ-00/38	182452	1

Heating Actuator Connection Unit

EP-501982_L

- The Connection Unit offers an assembly solution for floor heating application where multiple (up to 6) actuators are used to control radiator drives (CHVZ-01/04). The unit can be either DIN-rail or wall mounted. For each zone a LED indicates the activity of an actuator for that zone.
- In configurations with the Bridge (CBCA-00/01) it is recommended to use the Heating actuator (CHAU-01/01-10E). For configurations that contains the SHC either the Switching (CSAU-01/01-10(E))) or Dimming (CDAU-01/04(-E)) actuators should be used with the Connection Unit.
- Attention, the Connection Unit must only be used to control radiator drives (CHVZ-01/04), e.g. 230 VAC loads <2 W.

1-6 zones, 230 VAC	CMMZ-00/54	EP-501982	1

USB Configuration Stick

RF01012

- Electrical installation specialists will need the USB Configuration Stick in combination with a notebook/laptop for final adjustment of devices via the MRF software.

	CKOZ-00/13	168548	1

Version	Type Designation	Article No.	Pack (pcs.)

USB Communication Stick

RF01012

- The USB Communication-Stick is used for connecting other systems, e.g. audio or video systems and 3rd party applications (visualization) with the Eaton RF system. A detailed documentation will inform the expert on how the commands get interpreted to create a connection between the systems.
- Attention: The device is not designed for the configuration of xComfort devices!

	CKOZ-00/14	168549	1

Battery TYPE 1, 3 V, CR2430

RF01504

- This battery can be used as a replacement battery for the 290271 Single push-button C100, the 290272 Double push-button C100 and the 2 Channel Remote-control (109383).

TYPE 1, 3 V, CR2430	CBTZ-00/01	265646	1

Battery TYPE 2, 3 V, CR2477N

RF01604

- This battery can be used as replacement battery for:
  Binary input unit CBEU-02/02
  Temperature input unit CTEU-02/01
  xComfort LeakageStop Detector CWGA-0D/01

TYPE 2, 3 V, CR2477N	CBTZ-00/02	265647	1

Battery TYPE 4, 3 V, CR2450

RF01604

- This battery can be used as replacement battery for:
  Standard 55x55mm push-button CTAA-0x/04, CPAD-00/193-195
  Multifunctional 55x55mm push-button CTSA-0x/04, CPAD-00/233-2335
  Universal Motion sensor CBMD-02/0x

TYPE 4, 3 V, CR2450	CBTZ-00/04	126037	1

Version	Type Designation	Article No.	Pack (pcs.)

Adhesive Strips

RF00804

- CMMZ-00/24: intended as replacement for the adhesive strips included in the scope of delivery of the single, double and quad Push-button, battery powered Binary input unit, Temperature input unit or Room controller, in case they get damaged when removing the device.
- CMMZ-00/46: intended as replacement for the adhesive strips included in the scope of delivery of the Door/Window sensor. A set consist of the adhesive strips for the Sensor, which can also be used for the mounting of the spacers, and the adhesive strip for the Magnet.

Information: **The ordering number refers to 1 adhesive strip or set.** Delivery of single pieces is not possible! Please order the packing unit at least (20 or 10 pcs.) or a multiple of the packing unit!

45 x 7 x approx. 1 mm	CMMZ-00/24	137290	20
30 x 8 x 1.5 + 50 x 9 x 0.45 mm	CMMZ-00/46	300719	10

55 mm Push-button Base plate screws

sg06017

- Spare screws to fixate the 55 mm Push-buttons (125969 and 126030-126034) on the Push-button Base plate. The standard type is 2.2x5 mm. Use the longer 2.2x8 mm screws in case of difficulties reaching the base plate.
  Warning: Be aware that with tightening the longer screws could damage the surface behind the base plate! Set for 10 Push-buttons.

Information: **The ordering number refers to 1 screw.** Delivery of single pieces is not possible! Please order the packing unit at least (20 pcs.) or a multiple of the packing unit!

Push-button Base plate screws 2.2 x 5 mm	CMMZ-00/39	193436	20
Push-button Base plate screws 2.2 x 8 mm	CMMZ-00/40	193437	20

Screws and Dowels

RF00904

- They allow to screw-fix the single, double and quad Push-button, Battery powered Binary input unit, Temperature input unit or Room controller instead of fixing them with the adhesive strips include in the scope of delivery – or they can be used in addition to the adhesive strips..

Information: **The ordering number refers to 1 screw + dowel.** Delivery of single pieces is not possible! Please order the pakking unit at least (20 pcs.) or a multiple of the packing unit!

Srews d = 3 x 25 mm, Dowels d = 4 x 20 mm	CMMZ-00/25	137291	20

Version	Type Designation	Article No.	Pack (pcs.)

Push-button Base Plate for "Push-button universal, 55 x 55 mm" and Room Controller Touch

RF10410

- Base plates for the "Push-button universal, 55X55 mm", single, double, 4-fold (e.g. 125969) and Room Controller Touch (e.g. 187708). The CMMZ-00/22 is the universal base plate for mount on any flat surface. The CMMZ-00/45 base plate is designed for mounting on an installation box where bending of the universal base plate may occur.

Information: **The ordering number refers to 1 base plate.** Delivery of single pieces is not possible! Please order the packing unit at least (e.g. 10 or 6 pcs) or a multiple of the packing unit!

55 x 55 mm, universal mount	CMMZ-00/22	126039	10
55 x 55 mm, installation box mount	CMMZ-00/45	300332	6

Frame 55 x 55 mm

RF01014

Single frame, white, gloss	CRAZ-01/01	126066	5
Single frame, jet black, matt	CRAZ-01/09	195245	5

Cover Foil, white

wa_rf06613

- The cover foil is use where the single, double and quad Push-button, or Room Controller Touch is mounted onto glass walls and need to be covered at the rear. The Cover foil is self-adhesive.

Information: **The ordering number refers to 1 Cover foil.** Delivery of single pieces is not possible! Please order the packing unit at least (10 pcs.) or a multiple of the packing unit!

80 x 80 x 0.5 mm, white	CMMZ-00/27	137293	10

Version	Type Designation	Article No.	Pack (pcs.)

Cover Foil, grey

wa_rf06513

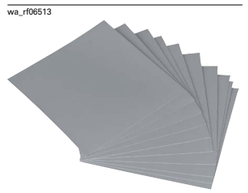

- The cover foil is use where the single, double and quad Push-button, or Room Controller Touch is mounted onto glass walls and need to be covered at the rear. The Cover foil is self-adhesive.

Information: **The ordering number refers to 1 Cover foil.** Delivery of single pieces is not possible! Please order the packing unit at least (10 pcs.) or a multiple of the packing unit!

80 x 80 x 0.5 mm, grey	CMMZ-00/28	137294	10

RC Unit

rf00315

- The RC Unit is used for
  - Fluorescent lamps: To limit voltage peaks occurring when switching off by inductances integrated in fluorescent lamps. It is recommended to attach an RC Unit between L and N to each fluorescent lamp.
  - LED lamps: To avoid flickering or glowing of low power LED lamps (non-dimmable only switching function) in OFF state with the xComfort Dimming actuators (CDAU-01/02, CDAU-01/03, CDAE-01/02, CDAE-01/03) it is recommended to add, parallel to the lamp, an RC Unit. For more information visit www.eaton.eu/xcomfort.
- The RC Unit does not replace the conventional overvoltage protection!

250 VAC	CMMZ-00/07	292260	1

DIN Rail Clip

RF01910

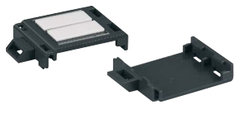

- You can fix an actuator on the DIN rail clip and then clip both together onto the DIN rail.
  Attention: Never place all actuators in the distribution board, this would disable the routing function in Comfort Mode.
  Attention: Never use metal distribution boards because metal may shield the RF signal off!!

Information: **The ordering number refers to 1 DIN rail clip.** Delivery of single pieces is not possible! Please order the packing unit at least (10 pcs.) or a multiple of the packing unit!

	CMMZ-00/30	135529	10

Version	Type Designation	Article No.	Pack (pcs.)

Rockers without LED, neutral, gloss finish

Single			
Creme	CWIZ-01/32	172988	10
Pure white	CWIZ-01/31	172985	10
Traffic white	CWIZ-01/35	179598	10
Alpine white	CWIZ-01/37	184589	10
Signal white	CWIZ-01/38	193987	10
Silver	CWIZ-01/33	172991	10
Signal red	CWIZ-01/36	184467	10

Double			
Creme	CWIZ-02/32	172989	10
Pure white	CWIZ-02/31	172986	10
Traffic white	CWIZ-02/35	179599	10
Alpine white	CWIZ-02/37	184590	10
Signal white	CWIZ-02/38	193988	10
Silver	CWIZ-02/33	172992	10

Quad			
Creme	CWIZ-04/32	172990	10
Pure white	CWIZ-04/31	172987	10
Traffic white	CWIZ-04/35	179600	10
Alpine white	CWIZ-04/37	184591	10
Signal white	CWIZ-04/38	193989	10
Silver	CWIZ-04/33	172993	10

Rockers without LED, with marking I/0, gloss finish

Single			
Creme	CWIZ-01/42	172997	10
Pure white	CWIZ-01/41	172994	10
Traffic white	CWIZ-01/45	179601	10
Alpine white	CWIZ-01/47	184592	10
Signal white	CWIZ-01/48	193990	10
Silver	CWIZ-01/43	173000	10

Double			
Creme	CWIZ-02/42	172998	10
Pure white	CWIZ-02/41	172995	10
Traffic white	CWIZ-02/45	179602	10
Alpine white	CWIZ-02/47	184593	10
Signal white	CWIZ-02/48	193991	10
Silver	CWIZ-02/43	173001	10

Quad			
Creme	CWIZ-04/42	172999	10
Pure white	CWIZ-04/41	172996	10
Traffic white	CWIZ-04/45	179603	10
Alpine white	CWIZ-04/47	184594	10
Signal white	CWIZ-04/48	193992	10
Silver	CWIZ-04/43	173002	10

Version	Type Designation	Article No.	Pack (pcs.)

Rockers without LED, with marking ▲ and ▼, gloss finish

Single			
Creme	CWIZ-01/52	173006	10
Pure white	CWIZ-01/51	173003	10
Traffic white	CWIZ-01/55	179604	10
Alpine white	CWIZ-01/57	184595	10
Signal white	CWIZ-01/58	193993	10
Silver	CWIZ-01/53	173009	10

Double			
Creme	CWIZ-02/52	173007	10
Pure white	CWIZ-02/51	173004	10
Traffic white	CWIZ-02/55	179605	10
Alpine white	CWIZ-02/57	184596	10
Signal white	CWIZ-02/58	193994	10
Silver	CWIZ-02/53	173010	10

Quad			
Creme	CWIZ-04/52	173008	10
Pure white	CWIZ-04/51	173005	10
Traffic white	CWIZ-04/55	179606	10
Alpine white	CWIZ-04/57	184597	10
Signal white	CWIZ-04/58	193995	10
Silver	CWIZ-04/53	173011	10

Version	Type Designation	Article No.	Pack (pcs.)

Rockers without LED, with special marking

Single

2-Scenes A			
Pure white, gloss	CWIZ-01/71	196842	1
Alpine white, matt	CWIZ-01/b7	EP-502607	1
Signal white, gloss	CWIZ-01/78	EP-502095	1
Silver, matt	CWIZ-01/b3	304443	1
Jet black, matt	CWIZ-01/b9	301904	1
2-Scenes B			
Pure white, gloss	CWIZ-01/e1	304447	1
Alpine white, matt	CWIZ-01/f7	EP-502608	1
Signal white, gloss	CWIZ-01/e8	EP-502097	1
Silver, matt	CWIZ-01/f3	304449	1
Jet black, matt	CWIZ-01/f9	304452	1
LeakageStop			
Pure white, gloss	CWIZ-01/g1	EP-500542	1
Alpine white, matt	CWIZ-01/h7	EP-502609	1
Signal white, gloss	CWIZ-01/g8	EP-502099	1
Silver, matt	CWIZ-01/h3	EP-500543	1
Jet black, matt	CWIZ-01/h9	EP-500544	1

Double

Ventilation			
Pure white, gloss	CWIZ-02/61	182884	1
Alpine white, gloss	CWIZ-02/67	EP-500015	1
Alpine white, matt	CWIZ-02/a7	EP-500853	1
Signal white, gloss	CWIZ-02/68	EP-502093	1
Silver, matt	CWIZ-02/a3	304433	1
Jet black, matt	CWIZ-02/a9	301906	1
4-Scenes A			
Pure white, gloss	CWIZ-02/81	196843	1
Alpine white, matt	CWIZ-01/h7	EP-502609	1
Signal white, gloss	CWIZ-02/88	EP-502089	1
Silver, matt	CWIZ-02/c3	304445	1
Jet black, matt	CWIZ-02/c9	301907	1
4-Scenes B			
Pure white, gloss	CWIZ-02/91	196844	1
Alpine white, matt	CWIZ-01/d7	EP-502611	1
Signal white, gloss	CWIZ-02/98	EP-502091	1
Silver, matt	CWIZ-02/d3	304446	1
Jet black, matt	CWIZ-02/d9	301908	1

4 fold

8-Scenes A			
Pure white, gloss	CWIZ-04/k1	EP-501488	1
Alpine white, matt	CWIZ-04/m7	EP-502614	1
Signal white, gloss	CWIZ-04/k8	EP-502087	1
Silver, matt	CWIZ-04/m3	EP-501489	1
Jet black, matt	CWIZ-04/m9	EP-501490	1

Version	Type Designation	Article No.	Pack (pcs.)

Rockers without LED, neutral, matt finish

Single

Creme	CWIZ-01/02	126043	10
Pure white	CWIZ-01/01	126042	10
Alpine white	CWIZ-01/07	EP-500844	10
Silver	CWIZ-01/03	126044	10
Anthracite	CWIZ-01/04	126045	10
Jet black	CWIZ-01/09	195242	10

Double

Creme	CWIZ-02/02	126047	10
Pure white	CWIZ-02/01	126046	10
Alpine white	CWIZ-02/07	EP-500845	10
Silver	CWIZ-02/03	126048	10
Anthracite	CWIZ-02/04	126049	10
Jet black	CWIZ-02/09	195243	10

Quad

Creme	CWIZ-04/02	126051	10
Pure white	CWIZ-04/01	126050	10
Alpine white	CWIZ-04/07	EP-500846	10
Silver	CWIZ-04/03	126052	10
Anthracite	CWIZ-04/04	126053	10
Jet black	CWIZ-04/09	195244	10

Rockers without LED, with marking I/0, matt finish

Single

Creme	CWIZ-01/12	147590	10
Pure white	CWIZ-01/11	147589	10
Alpine white	CWIZ-01/17	EP-500847	10
Silver	CWIZ-01/13	147591	10
Anthracite	CWIZ-01/14	147592	10

Double

Creme	CWIZ-02/12	147594	10
Pure white	CWIZ-02/11	147593	10
Alpine white	CWIZ-02/17	EP-500848	10
Silver	CWIZ-02/13	147595	10
Anthracite	CWIZ-02/14	147596	10

Quad

Creme	CWIZ-04/12	147598	10
Pure white	CWIZ-04/11	147597	10
Alpine white	CWIZ-04/17	EP-500849	10
Silver	CWIZ-04/13	147599	10
Anthracite	CWIZ-04/14	147600	10

Attention! Frames must be ordered separately.

Technical Specifications

Version	Type Designation	Article No.	Pack (pcs.)
Rockers without LED, with marking ▲ and ▼, matt finish			
Single			
Creme	CWIZ-01/22	147614	10
Pure white	CWIZ-01/21	147613	10
Alpine white	CWIZ-01/27	EP-500850	10
Silver	CWIZ-01/23	147615	10
Anthracite	CWIZ-01/24	147616	10
Jet Black	CWIZ-01/29	304425	10
Double			
Creme	CWIZ-02/22	147618	10
Pure white	CWIZ-02/21	147617	10
Alpine white	CWIZ-02/27	EP-500851	10
Silver	CWIZ-02/23	147619	10
Anthracite	CWIZ-02/24	147620	10
Jet Black	CWIZ-02/29	304426	10
Quad			
Creme	CWIZ-04/22	147622	10
Pure white	CWIZ-04/21	147621	10
Alpine white	CWIZ-04/27	EP-500852	10
Silver	CWIZ-04/23	147623	10
Anthracite	CWIZ-04/24	147624	10
Jet Black	CWIZ-04/29	304427	10

Attention! Frames must be ordered separately.

Wiring Examples for Switching Actuator CSAU-01/01-1.IE

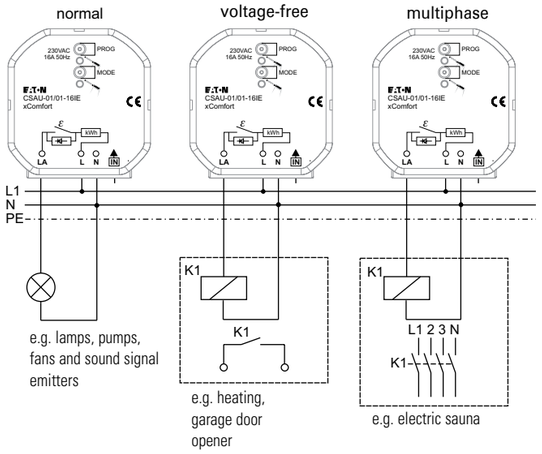

Wiring Examples for Switching Actuator CSAU-01/01-1.IE

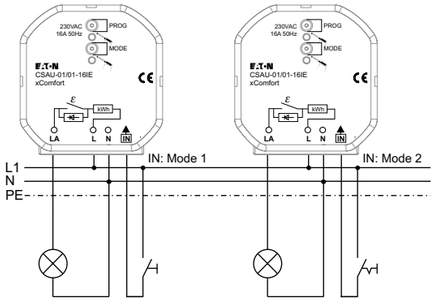

Wiring Example for Switching Actuator CSAU-01/01-1.IE

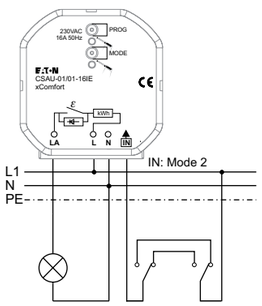

Wiring Examples for Switching Actuator CSAU-01/02, CSAU-01/04

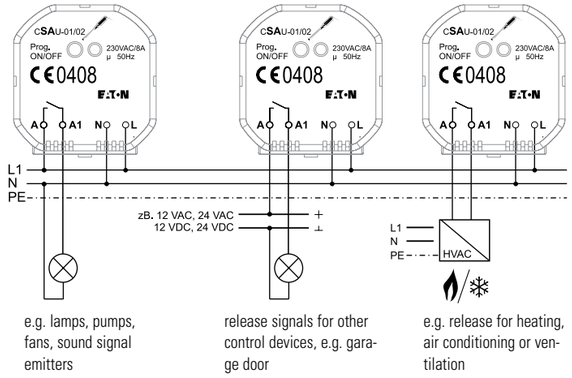

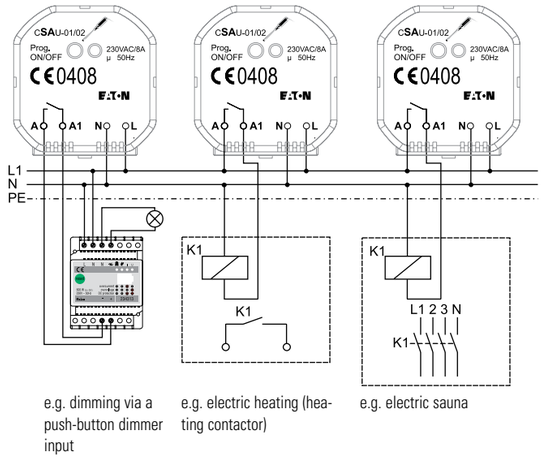

Schalten von Leuchtstoffröhren mit dem Switching Actuator CSAU-01/02

SA cycles	Total capacitor value
55000	25 µF
26000	55 µF
14000	90 µF
8000	100 µF
7000	130 µF

The numbers of SA cycles specified are approximate values and may vary depending on the local conditions prevailing in each case. The total capacitor value is the sum of the individual capacitor values according to the type and number of fluorescent lamps compensated in parallel (see table below). The max. load current of the actuator must not be exceeded. The max. number of cycles selected depends on the type of application and hence determines the number of fluorescent lamps to be switched via an actuator.

Lamp capacity	Capacitor / Compensation in parallel
4-13 W	2 µF
15-40 W	4.5 µF
58 W	7 µF

The above mentioned values are given by the manufacturers of fluorescent lamps and ballasts. Subject to changes without guarantee.

Wiring Examples for Switching Actuator CSAU-01/03

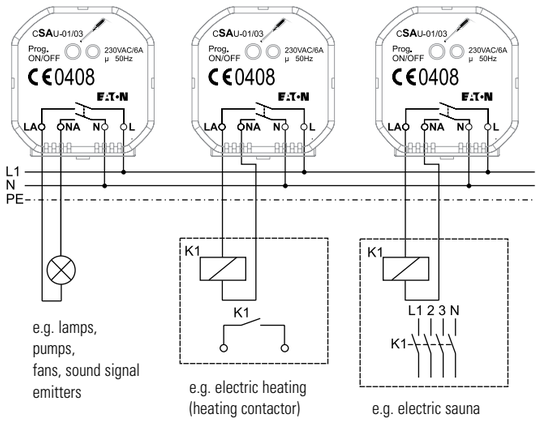

Switching fluorescent lamps with a CSAU-01/03 actuator

SA cycles	Total capacitor value
55000	25 µF
26000	55 µF
14000	90 µF
8000	100 µF
7000	130 µF

The numbers of SA cycles specified are approximate values and may vary depending on the local conditions prevailing in each case. The total capacitor value is the sum of the individual capacitor values according to the type and number of fluorescent lamps compensated in parallel (see table below). The max. load current of the actuator must not be exceeded. The max. number of cycles selected depends on the type of application and hence determines the number of fluorescent lamps to be switched via an actuator.

Lamp capacity	Capacitor / Compensation in parallel
4-13 W	2 µF
15-40 W	4.5 µF
58 W	7 µF

The above mentioned values are given by the manufacturers of fluorescent lamps and ballasts. Subject to changes without guarantee.

Wiring Examples for Shutter Actuator CJAU-01/02

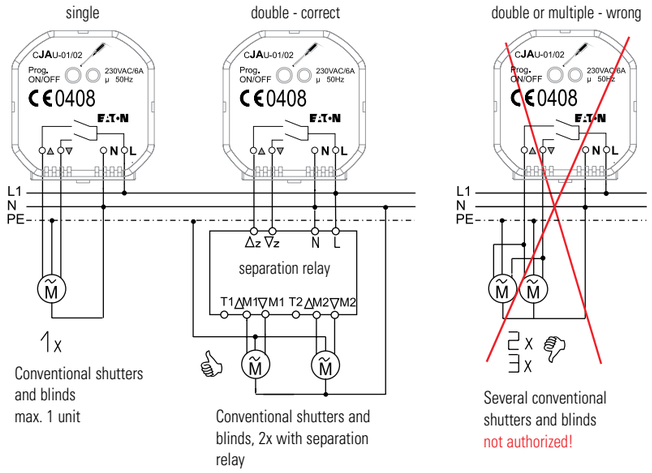

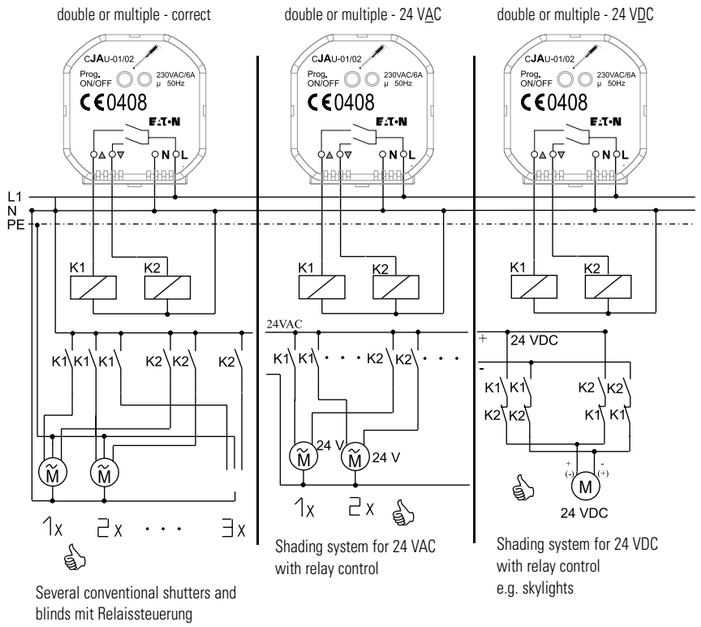

Wiring Examples for Shutter Actuator CJAU-01/04, CJAU-01/04-I

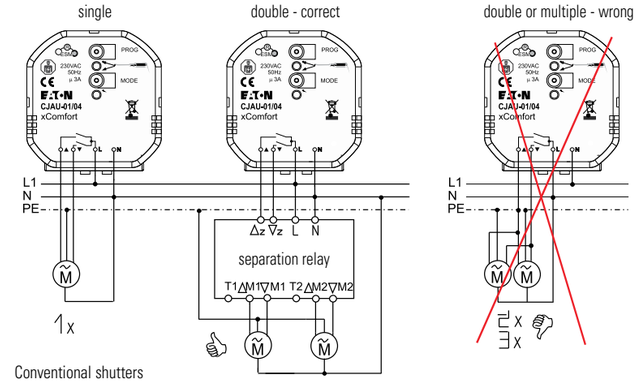

Conventional shutters and blinds max. 1 unit

Conventional shutters and blinds, 2x with separation relay

Several conventional shutters and blinds not authorized!

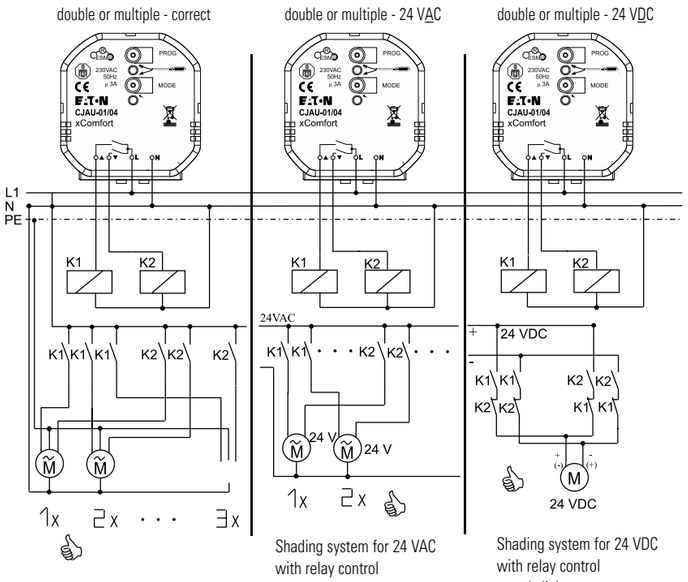

Several conventional shutters and blinds mit Relaissteuerung

Shading system for 24 VAC with relay control

Shading system for 24 VDC with relay control e.g. skylights

Wiring Example Shutter Actuator CJAU-01/04-I

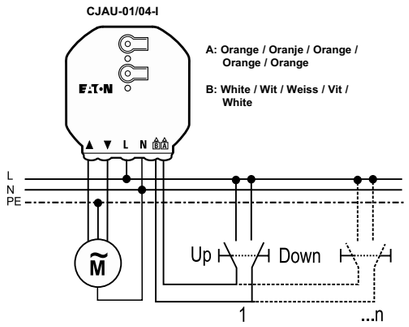

Wiring Examples for Smart Dimming Actuator CDAU-01/04..

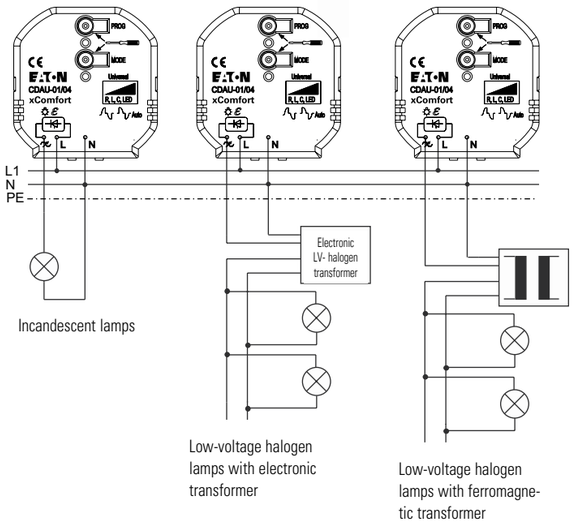

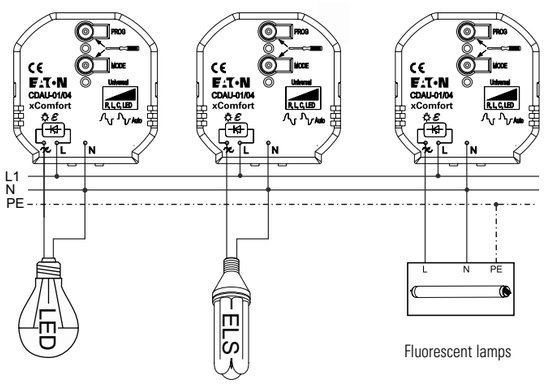

Typical 100 W *

Dimmable with phase section LED-lamps

Typical 100 W *

Dimmable with phase section energy saving lamps

* Depending on the LED- or ELS-lamp type.

Wiring Examples for Heating Actuator CHAU-01/01

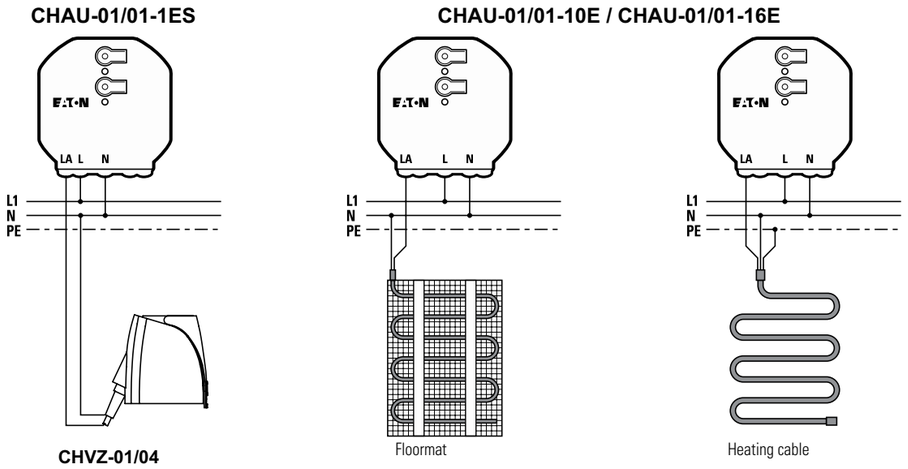

Wiring Example for CMMZ-00/54

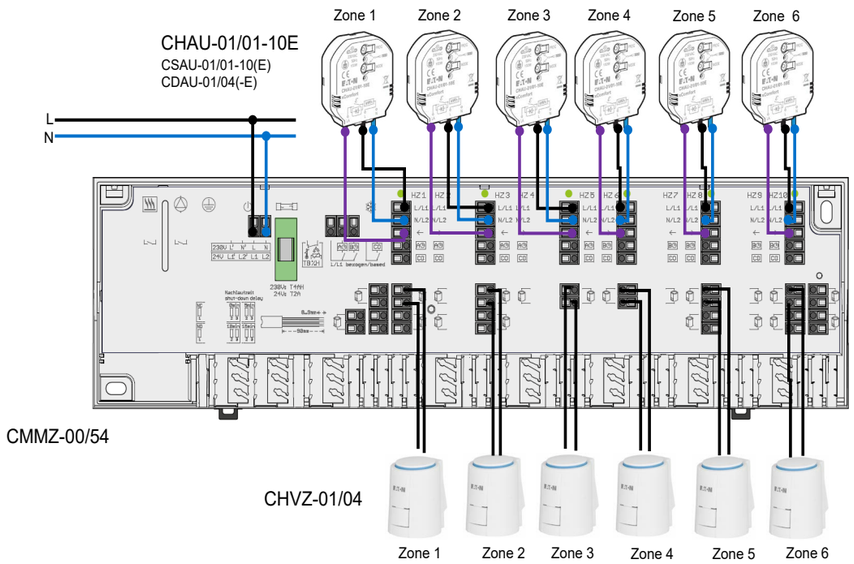

Wiring Examples for Energy Meter Sensor CEMU-01/02

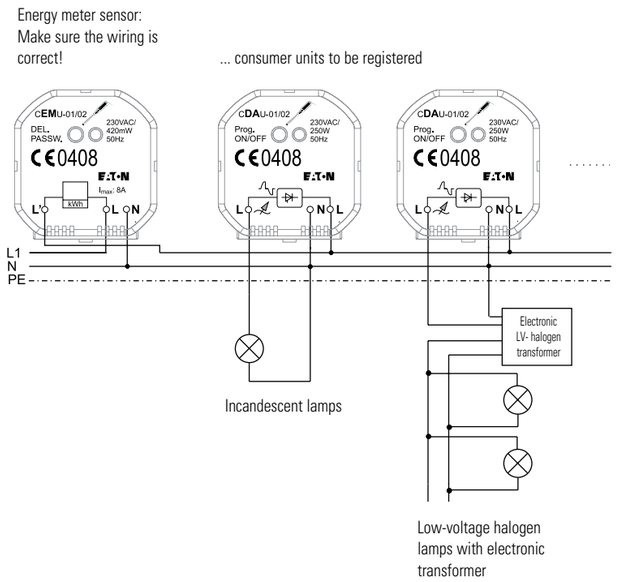

Wiring Examples for xComfort Weather Station CWS-04/01

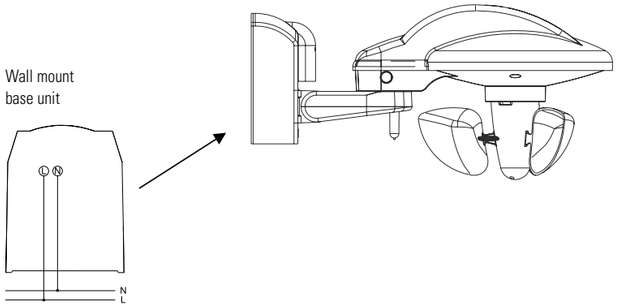

Wiring Examples for Binary Input CBEU-02/03

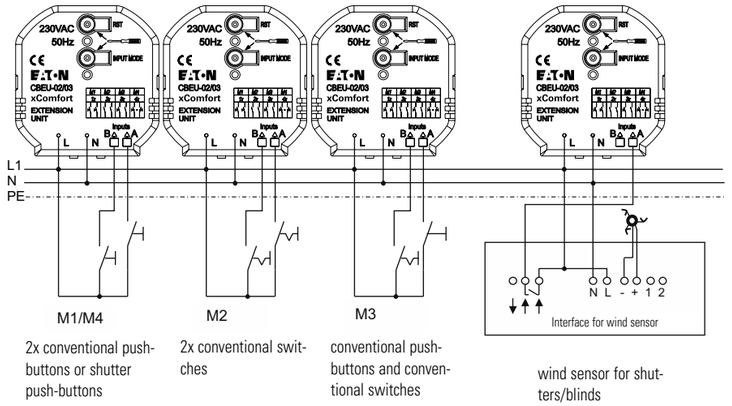

2x conventional push-buttons or shutter push-buttons

2x conventional switches

conventional push-buttons and conventional switches

wind sensor for shutters/blinds

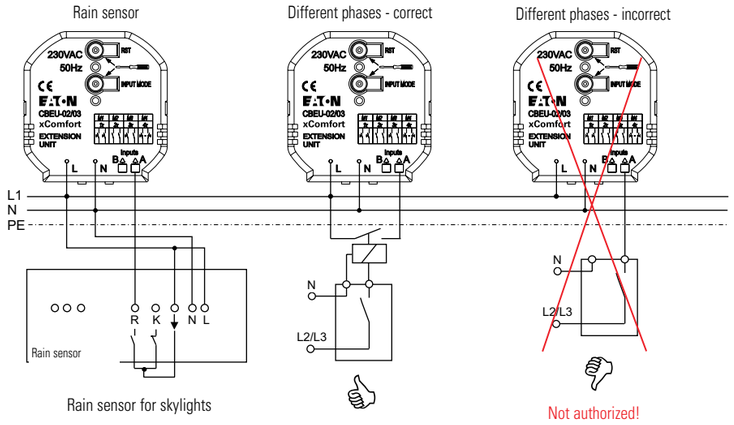

Rain sensor for skylights

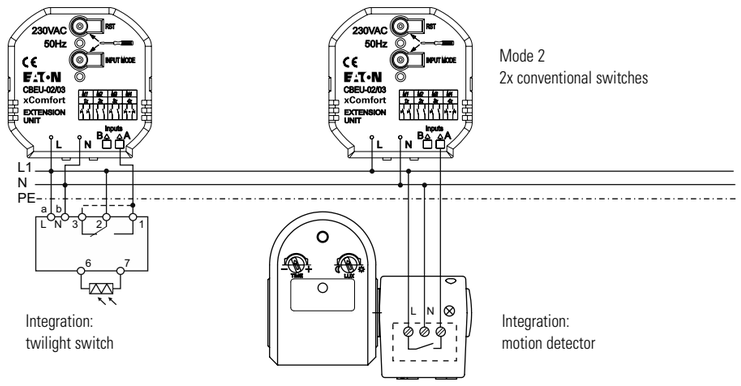

Integration: twilight switch

Integration: motion detector

Wiring Examples for Binary Input CBEU-02/03 (continued)

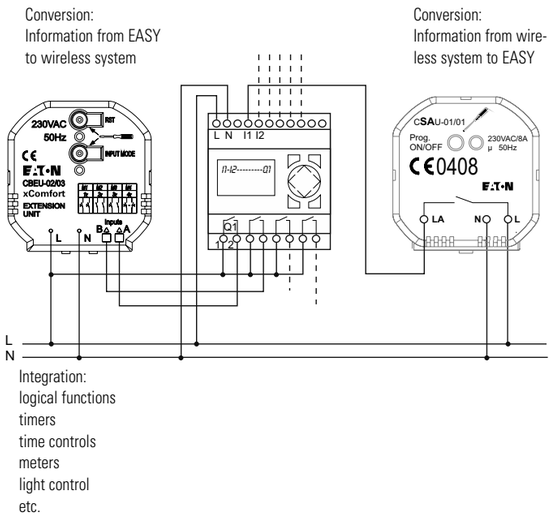

Wiring Examples for Binary Input CBEU-02/02

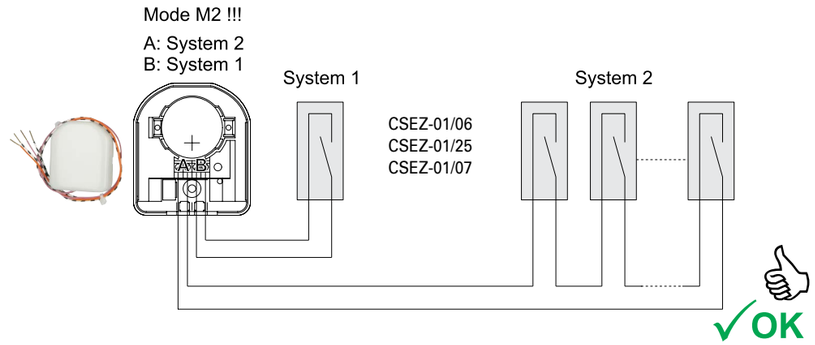

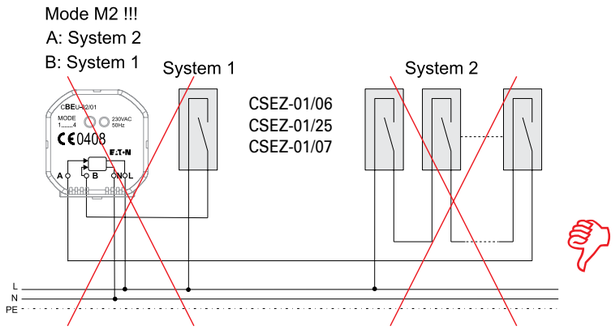

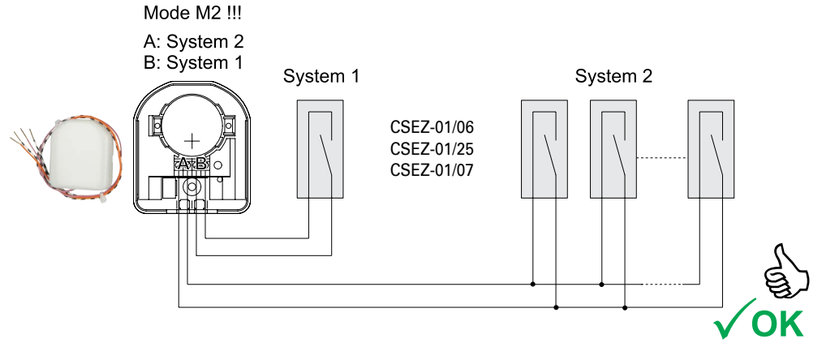

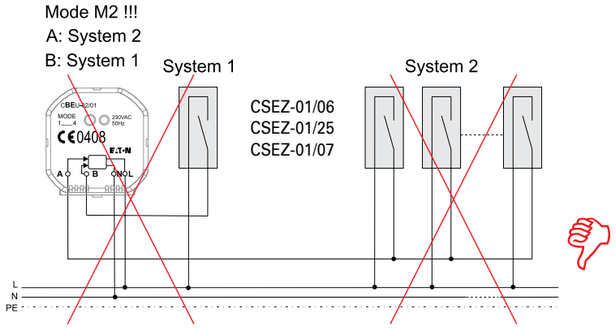

Wiring Examples for Analogue Input CAEE-02/01

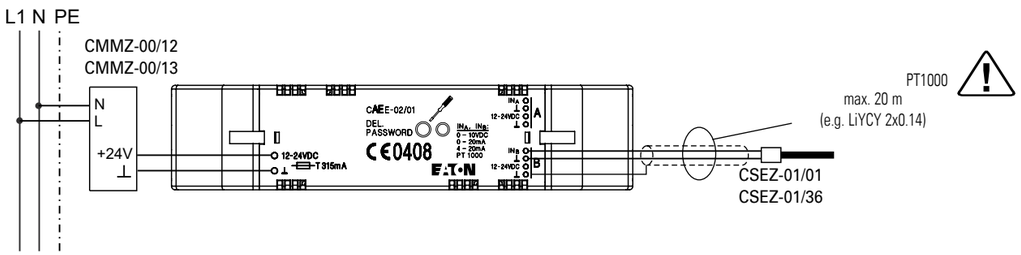

Wiring Examples for Analogue Actuator CAAE-01/01

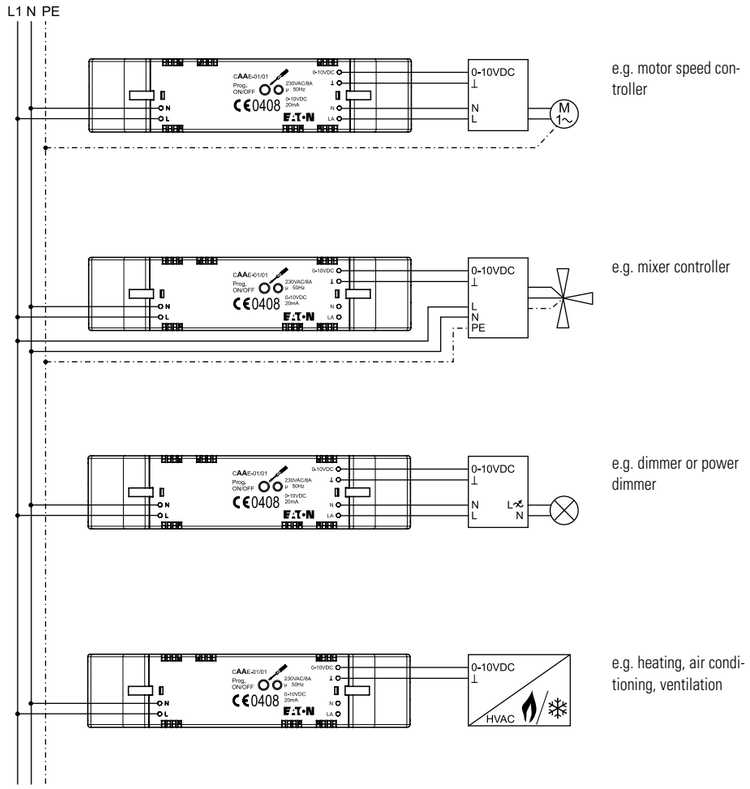

Wiring Examples for Analogue Actuator CAAE-01/02

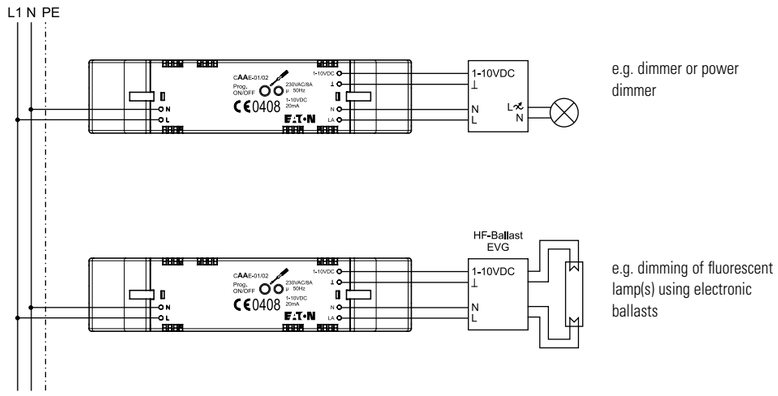

Wiring Examples for Shutter Actuator CJAE-01/01

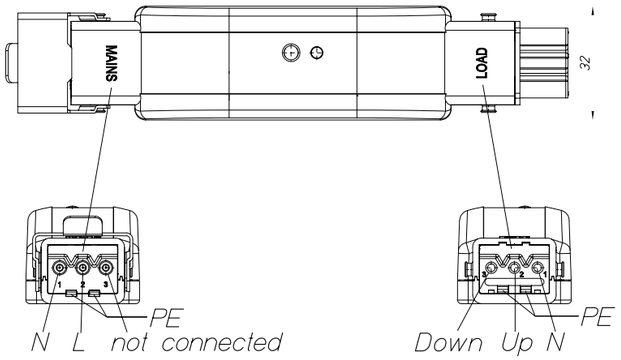

Wiring Examples for Smart Dimming Actuator CDAE-01/04, CDAE-01/05-I, CDAE-01/05-E

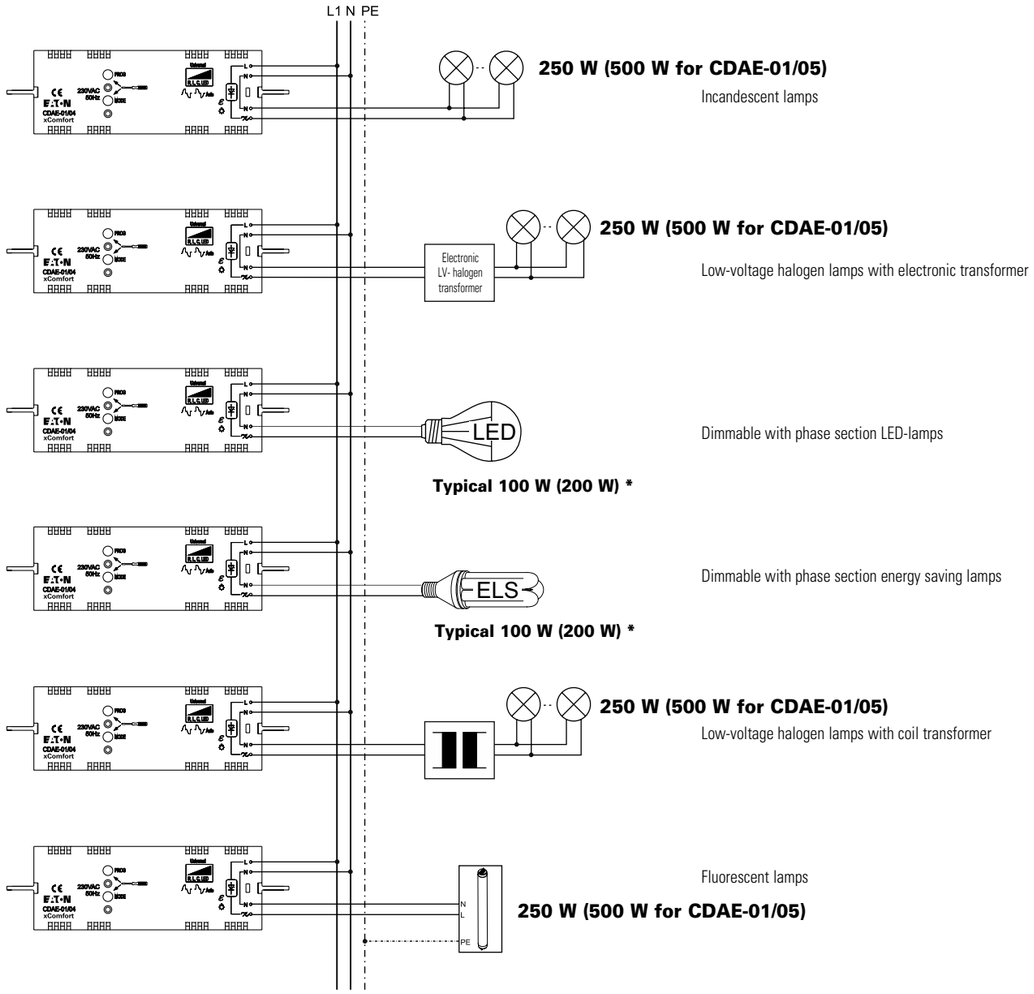

* Depending on the LED- or ELS-lamp type.

Wiring Examples for Impulse Counting Input 2-way CIZE-02/01

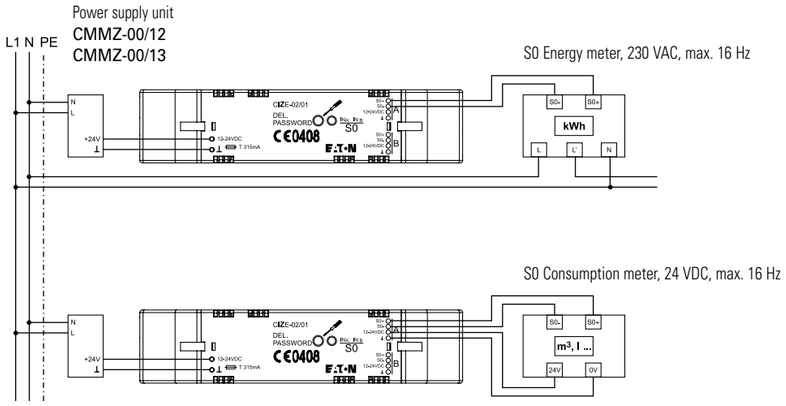

Wiring Examples for Radiator Valve CHVZ-01/04

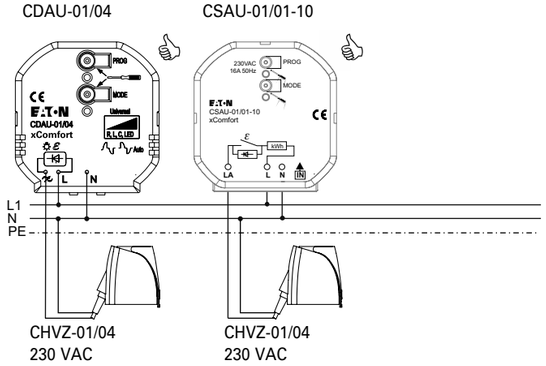

Overvoltage protection with inductive loads - fluorescent lamps

Is on the same phase, on which e.g. also CSAU-01/0x, CJAU-01/0x, CDAU-01/0x, CSAP-01/0x, CDAP-01/0x, and/or CBEU-02/03 are connected, an inductance (e.g. fluorescent lamp), an overvoltage protection is as in following examples to use.

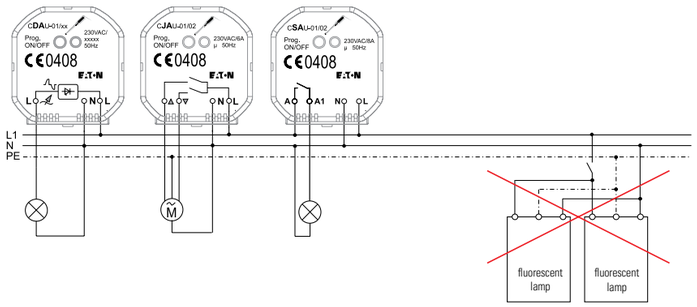

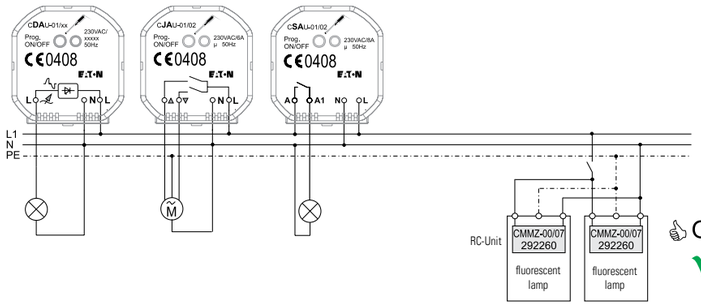

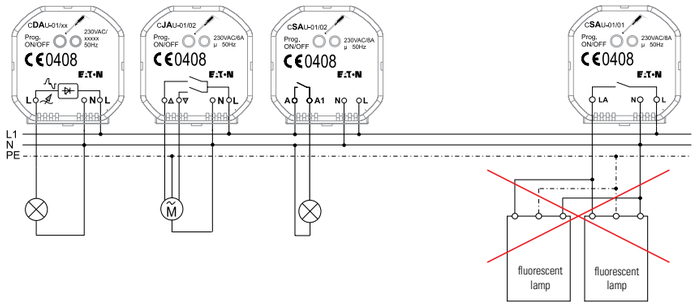

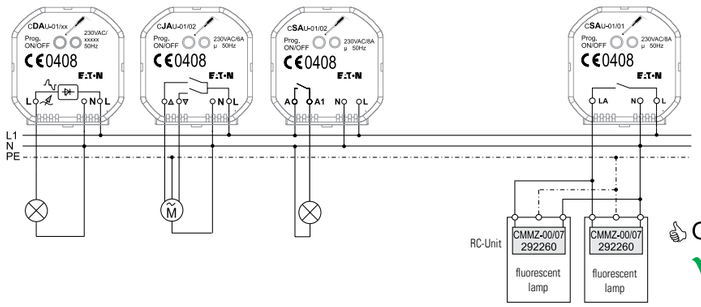

Overvoltage protection with inductive loads - fluorescent lamps (continued)

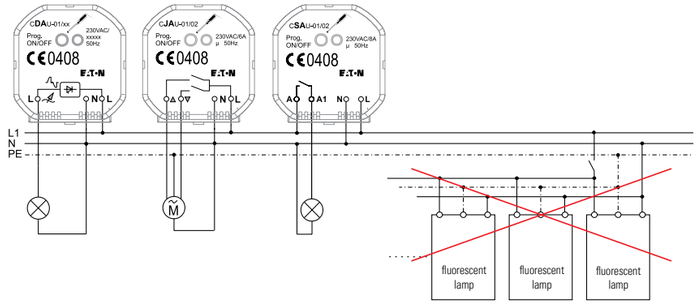

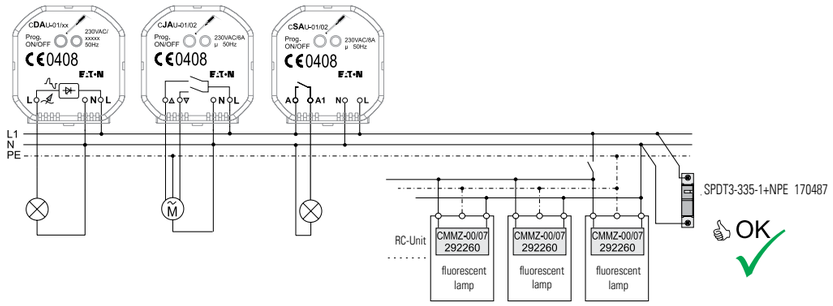

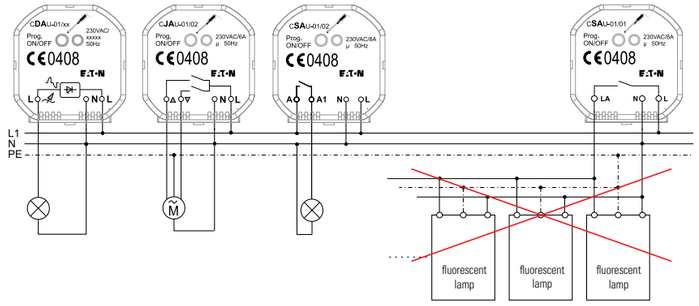

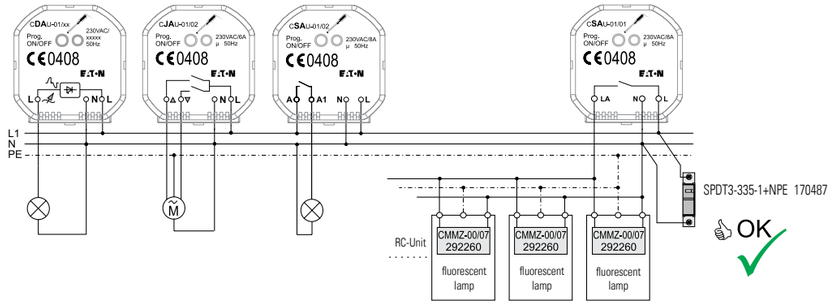

Connection example for Energy Sensor CEMU-01/04

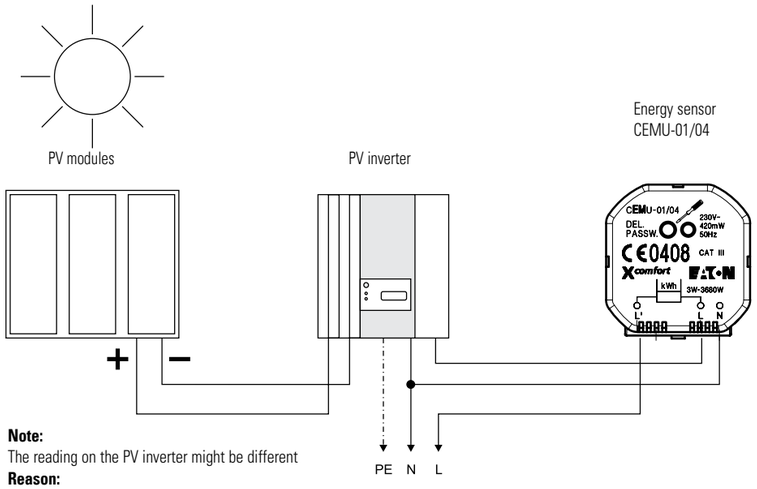

Note:
The reading on the PV inverter might be different
Reason:
Leakage and drop of voltage at the wiring and/or the transmitting intervals from the energy sensor and the update intervals at the PV inverter display.

Connection example for Energy Sensor CEMU-01/03

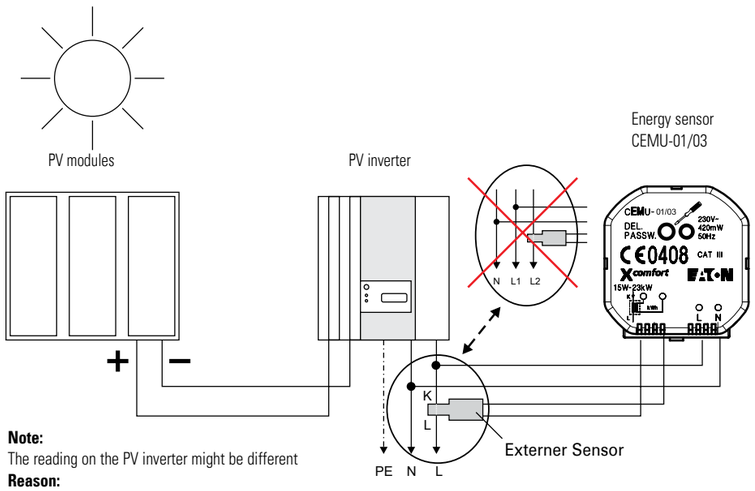

Note:
The reading on the PV inverter might be different
Reason:
Leakage and drop of voltage at the wiring and/or the transmitting intervals from the energy sensor and the update intervals at the PV inverter display.

Connection example for xComfort Bridge CBCA-00/01

DIY applications

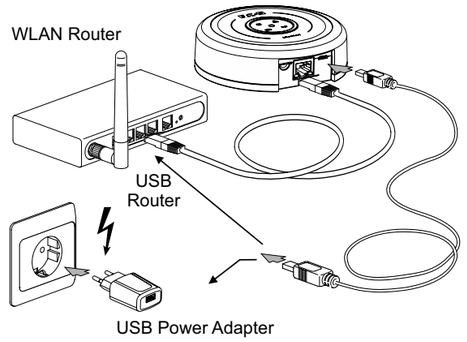

Connection example for Smart Home Controller CHCA-00/01

Home applications

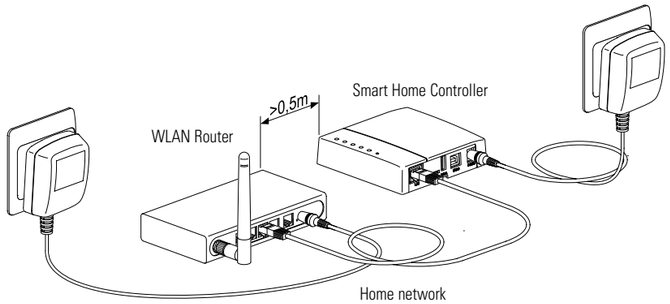

Automatic assignment of the IP address via DHCP

Small functional buildings, offices, …

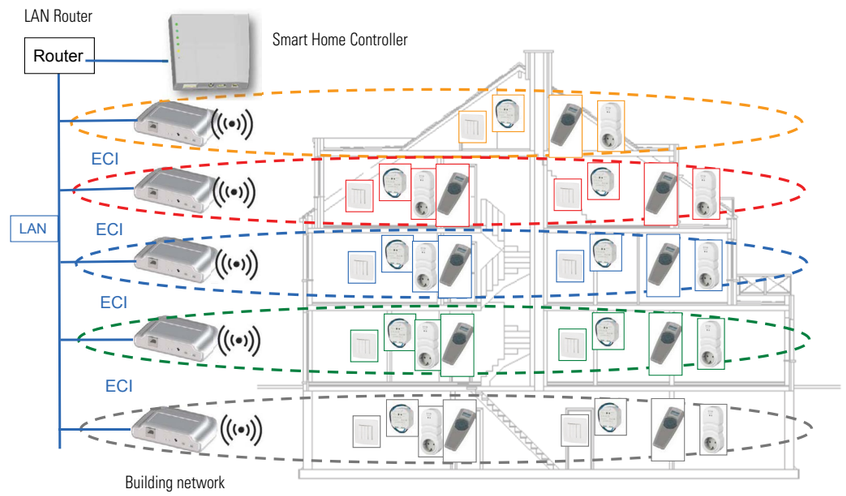

Switching Actuator CSAU-01/01-1.IE

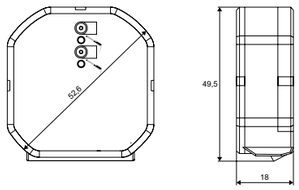

Technical Specifications	
Power supply	230 VAC, 50 Hz
Connections	
CSAU-01/01-10(IE)	Single-wired 1.5 mm² all connections
CSAU-01/01-16(IE)	Single-wired 2.5 mm² L+LA connections, single-wired 1.5 mm² N+IN connections
Power consumption	
CSAU-01/01-1.(I)	0.23 W
CSAU-01/01-1.IE	0.25 W
Switching technology	Eaton Patented Hybrid switching technology
Load	The device switches L via L_A
CSAU-01/01-10(IE)	230 VAC, 50 Hz, 10 A RLC Load
CSAU-01/01-16(IE)	230 VAC, 50 Hz, 16 A RLC Load
Energy measurement sensor	
CSAU-01/01-10(IE)	3 W to 2300 W, 5 % accuracy >3 W
CSAU-01/01-16(IE)	3 W to 3680 W, 5 % accuracy >3 W
Measurement units	Energy in kWh, active power in W
Binary input voltage	Maximum 265 V
Input contact resistance IN to L	<10 kΩ reliably ON, >50 kΩ reliably OFF
Voltage difference IN to L	<1 V reliably ON, >3 V reliably OFF
Internal protection	Overvoltage, temperature (load will be disconnected)
Pre-protection	Miniature circuit breaker 16 A, characteristic C
Frequency	868.300 MHz
Type of transmission	Bi-directional, via coded telegrams
Indoor range	Typically 30 - 50 m, 2 walls + 1 ceiling (depending on wall thickness and material !!)
Function assignments	32
Routing paths	32
Degree of protection	IP20
Degree of soiling	2
Operating temperature	-5 to +55 °C

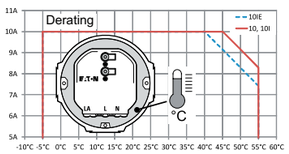

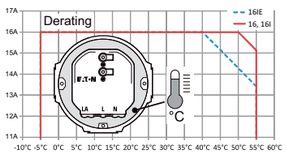

Storage/transportation temperature	-25 to +70 °C
Housing colour	Grey, RAL7035
Dimensions housing	H x W x D - 49.5 x 45.5 x 18 mm
Length of connection wires	150 mm
Approval	Printed onto the device

Basic Mode support:

Local input mode	Push-button (Mode 1), switch (Mode 2)
Function mode	On/Off, Surge, Push-button, Staircase, Staircase with pre-warning

Extended Status Messaging support:

Output status	OFF, ON, OFF Locked, ON Locked, Blinking, OFF over temperature
Binary input	ON, OFF pressed, not pressed
Internal device temperature	0-125 °C
Current power load	0.0-3700.0 W
Load error detection status	OK, Not OK

ATTENTION! Extended Status Messaging is supported by the following Smart Devices:

Room Manager	V41a (for output 1-10) or higher
Smart Home Controller	V2.0 or higher
USB RF Communication stick	V2.0 or higher
Ethernet CI	V2.0 or higher

If one of the connected devices does not support the Extended Status Messaging format the actuator will switch back to the Standard Status Messaging format.

CSAU-01/01-16
CSAU-01/01-16I
CSAU-01/01-16IE

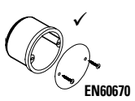

ATTENTION!
CSAU-01/01-16, CSAU-01/01-16I, CSAU-01/01-16IE:
This device must be installed inside a mounting box (complying to EN60670) and behind an accessory or blank plate that uses at least 2 screw fixing points to secure it to the mounting box. Failure to do so could result in a fire hazard or electric shock under extreme external fault conditions.

Protect with MCB 16 A Type B/C according to EN60898.

Switching Actuator potential-free CSAU-01/02, CSAU-01/04

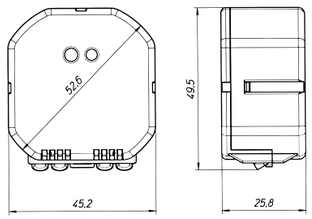

Technical Specifications	
Power supply	230 VAC, 50 Hz
Connections	Single-wired 1.5 mm² connections
Load	230 VAC, 50 Hz, 8 A resistive load; 24 VDC, 8 A The device switches A via A1
Pre-protection	Miniature circuit breaker 16 A, characteristic C Internal protection through thermal protection
Frequency	868.300 MHz
Type of transmission	Bi-directional, via coded telegrams
Indoor range	Typically 30 - 50 m, 2 walls + 1 ceiling (depending on wall thickness and material !!)
Degree of protection	IP20
Degree of soiling	2
Operating temperature	-5 to +45 °C
Storage/transportation temperature	-25 to +70 °C
Housing colour	Grey, RAL7035
Dimensions housing	H x W x D - 48.6 x 45.3 x 26.2 mm
Length of connection wires	150 mm
Approval	Printed onto the device

Switching Actuator all-poles CSAU-01/03

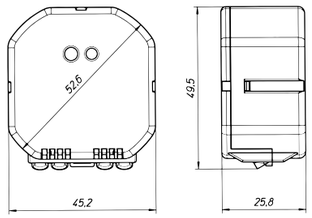

Technical Specifications	
Power supply	230 VAC, 50 Hz
Connections	Single-wired 1.5 mm² connections
Load	230 VAC, 50 Hz, 6 A resistive load The device switches L via LA and N via NA
Pre-protection	Miniature circuit breaker 16 A, characteristic C Internal protection through thermal protection
Frequency	868.300 MHz
Type of transmission	Bi-directional, via coded telegrams
Indoor range	Typically 30 - 50 m, 2 walls + 1 ceiling (depending on wall thickness and material !!)
Degree of protection	IP20
Degree of soiling	2
Operating temperature	-5 to +45 °C
Storage/transportation temperature	-25 to +70 °C
Housing colour	Grey, RAL7035
Dimensions housing	H x W x D - 48.6 x 45.3 x 26.2 mm
Length of connection wires	150 mm
Approval	Printed onto the device

Shutter Actuator CJAU-01/02

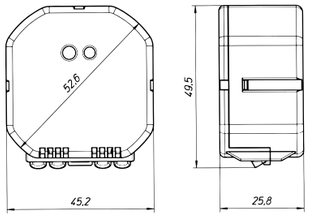

Technical Specifications	
Power supply	230 VAC, 50 Hz
Connections	Single-wired 1.5 mm² connections
Load	230 VAC, 50 Hz, 6 A resistive load Device switches L via change-over contact
Pre-protection	Miniature circuit breaker 16 A, characteristic C Internal protection through thermal protection
Direction changeover time	Typical 700-800 ms
Frequency	868.300 MHz
Type of transmission	Bi-directional, via coded telegrams
Indoor range	Typically 30 - 50 m, 2 walls + 1 ceiling (depending on wall thickness and material !!)
Degree of protection	IP20
Degree of soiling	2
Operating temperature	-5 to +45 °C
Storage/transportation temperature	-25 to +70 °C
Housing colour	Grey, RAL7035
Dimensions housing	H x W x D - 48.6 x 45.3 x 26.2 mm
Length of connection wires	150 mm
Approval	Printed onto the device

Shutter Actuator CJAU-01/04

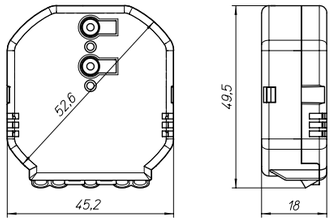

Technical Specifications	
Power supply	230 V AC, 50 Hz
Power standby	(typically) 190 mW
Connections, L, N, Outputs	Solid wire, 1.5 mm², pigtail connection
Length of connection wires	approx. 150 mm
Load	230 V AC, 50 Hz, 3 A R/L load Device switches L via change-over contact
Pre-protection	Miniature circuit breaker 16 A, characteristic C
Internal protection	Overvoltage, temperature (load will be disconnected)
Direction changeover time	Configurable. Factory default 800 ms
Frequency	868.300 MHz
Type of transmission	Bi-directional, via coded telegrams
Indoor range	Typically 30 - 50 m, 2 walls + 1 ceiling (depending on wall thickness and material)
Degree of protection	IP20
Degree of soiling	2
Operating temperature	-5 to +55 °C
Storage/transportation temperature	-25 to +70 °C
Housing color	Grey, similar to RAL7035
Housing dimensions	H x W x D - 48.5 x 45.5 x 18 mm
Approval	Printed onto the device

Shutter Actuator CJAU-01/04-I

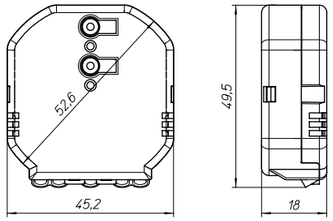

Technical Specifications	
Power supply	230 V AC, 50 Hz
Power standby	(typically) 190 mW
Connections	
L, N, Outputs	Solid wire, 1.5 mm², pigtail connection
Binary Inputs	Flexible wire, 0.75 mm², pigtail connection
Length of connection wires	approx. 150 mm
Load	230 V AC, 50 Hz, 3 A R/L load Device switches L via change-over contact
Binary input voltage	Maximum 265 V
Input contact resistance IN to L	< 10 kW reliably ON, > 50 kW reliably OFF
Voltage difference IN to L	< 1 V reliably ON, > 3 V reliably OFF
Pre-protection	Miniature circuit breaker 16 A, characteristic C
Internal protection	Overvoltage, temperature (load will be disconnected)
Direction changeover time	Configurable. Factory default 800 ms
Frequency	868.300 MHz
Type of transmission	Bi-directional, via coded telegrams
Indoor range	Typically 30 - 50 m, 2 walls + 1 ceiling (depending on wall thickness and material)
Degree of protection	IP20
Degree of soiling	2
Operating temperature	-5 to +55 °C
Storage/transportation temperature	-25 to +70 °C
Housing color	Grey, similar to RAL7035
Housing dimensions	H x W x D - 48.5 x 45.5 x 18 mm
Approval	Printed onto the device

Shutter Actuator CJAE-01/01

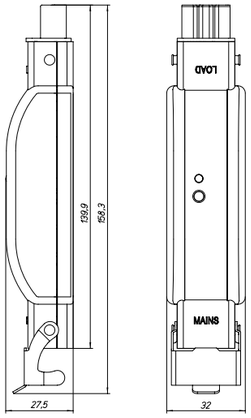

Technical Specifications	
Power supply	230 V AC, 50 Hz
Power standby	(typically) 220 mW
Connections	
Mains	STAS-3 connector with safety bracket
Load	STAK-3 connector
Load	230 V AC, 50 Hz, 3 A R/L load Device switches L via change-over contact
Pre-protection	Miniature circuit breaker 16 A, characteristic C
Internal protection	Overvoltage, temperature (load will be disconnected)
Direction changeover time	Configurable. Factory default 800 ms
Frequency	868.300 MHz
Type of transmission	Bi-directional, via coded telegrams
Indoor range	Typically 30 - 50 m, 2 walls + 1 ceiling (depending on wall thickness and material)
Degree of protection	IP44
Degree of soiling	2
Operating temperature	-30 to +55 °C
Storage/transportation temperature	-30 to +70 °C
Housing color	Black, similar to RAL9005
Housing dimensions	H x W x D – 27.5 x 138.3 x 32 mm
Approval	Printed onto the device

Smart Dimming Actuator CDAU-01/04, CDAU-01/04-I, CDAU-01/04-E

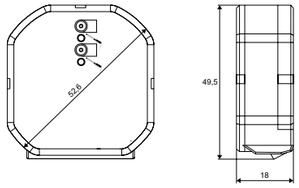

Technical Specifications	
Power supply	230 VAC +10% -15%, 50 Hz
Connections	Single-wired 1.5 mm² all connections
Load	0-250 W (0-250 VA) LED, ESL: 0-100 W (depending on the lamp type)

Note: Please note the dimmer use trailing edge mode for incandescent lamps automatically. In case the dimmer is forced to control incandescent lamps in leading edge mode the output reduction factor is about 50 %.

Power standby (typically)	
CDAU-01/04(-I)	325 mW
CDAU-01/04-E	425 mW
Energy measurement sensor (-E)	0.5 W to 250 W, 5,% ±0.5 W (>0.5 W)
Measurement units	Energy in kWh, active power in W
Binary input voltage	Maximum 265 V
Input contact resistance IN to L	<10 kΩ reliably ON, >50 kΩ reliably OFF
Voltage difference IN to L	<1 V reliably ON, >3 V reliably OFF
Internal protection	Overload, overvoltage, temperature, auto recovery (load will be disconnected)
Pre-protection	Miniature circuit breaker 16 A, characteristic C
Frequency	868.300 MHz
Type of transmission	Bi-directional, via coded telegrams
Indoor range	Typically 30 - 50 m, 2 walls + 1 ceiling (depending on wall thickness and material !!)
Function assignments	32
Routing paths	32
Degree of protection	IP20
Degree of soiling	2
Operating temperature	-5 to +55 °C

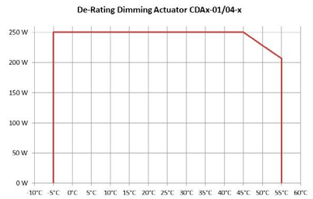

Note: Keep at least 35 mm distance in case several devices are used. Do not place the device near heat sources (transformers, halogen lamps etc.), keep a distance of approx. 200 mm. Do not place dimming actuators on top of each other. Allow for sufficient heat draw-off. Check max. operating temperature, reduce power where necessary.

Storage/transportation temperature	-25 to +70 °C
Housing colour	Grey, RAL7035
Dimensions housing	H x W x D - 49.5 x 45.5 x 18 mm
Length of connection wires	150 mm
Approval	Printed onto the device

Basic Mode support:	
Local input mode	Push-button (Mode 1), Switch (Mode 2), Mixed (Mode 3), Rocker (Mode 4), Sensor (Mode 5)
DIM profiles	R/L/C Standard, LED 1, LED 2, LED 3, CFL/ESL, ON/OFF (switching)

Extended Status Messaging support:

ATTENTION! Extended Status Messaging is supported by the following Smart Devices:

Room Manager	V41c or higher
Smart Home Controller	V2.1 or higher
USB RF Communication stick	V2.10 or higher
Ethernet CI	V2.01 or higher

If one of the connected devices does not support the Extended Status Messaging format the actuator will switch back to the Standard Status Messaging format.

Heating Actuator CHAU-01/01-1ES, CHAU-01/01-10E, CHAU-01/01-16E

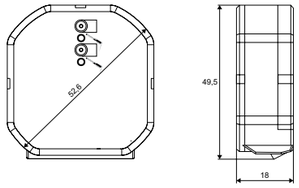

Technical Specifications	
Power supply	230 VAC +10% -15%, 50 Hz
Connections	Single-wired 1.5 mm² all connections
Load	
CHAU-01/01-1ES	230 VAC, 50 Hz, 1 A, RLC
CHAU-01/01-10E	230 VAC, 50 Hz, 10 A, RLC, Eaton patented Hybrid switching technology
CHAU-01/01-16E	230 VAC, 50 Hz, 16 A, RLC, Eaton patented Hybrid switching technology
Power standby (typically)	
CHAU-01/01-1ES	250 mW
CHAU-01/01-1xE	190 mW
Energy measurement sensor	
CHAU-01/01-1ES	0.5 W to 250 W, 5% ±0.5 W (>0.5 W)
CHAU-01/01-1xE	3 W to 2300 W, 5% ±0.5 W (>3 W)
Measurement units	Energy in kWh, active power in W
Internal protection	Overload, temperature (load will be disconnected)
Pre-protection	Miniature circuit breaker 16 A, characteristic C
Frequency	868.300 MHz
Type of transmission	Bi-directional, via coded telegrams
Indoor range	Typically 30 - 50 m, 2 walls + 1 ceiling (depending on wall thickness and material !!)
Function assignments	32
Routing paths	32
Degree of protection	IP20
Degree of soiling	2
Operating temperature	-5 to +55 °C

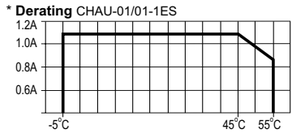

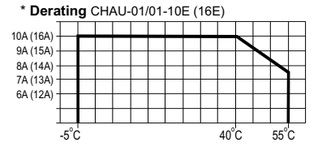

Storage/transportation temperature	-25 to +70 °C
Housing colour	Grey, RAL7035
Dimensions housing	H x W x D - 49.5 x 45.5 x 18 mm
Length of connection wires	150 mm
Approval	Printed onto the device

Basic Mode support:	
Heating profiles	Profile 1: Floor Heating Foil Profile 2: Floor Heating Cable Profile 3: Electrical Radiator Profile 4: IR Panel Profile 5: Water based Radiator

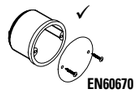

ATTENTION!
CHAU-01/01-16E:
This device must be installed inside a mounting box (complying to EN60670) and behind an accessory or blank plate that uses at least 2 screw fixing points to secure it to the mounting box. Failure to do so could result in a fire hazard or electric shock under extreme external fault conditions.

Protect with MCB 16 A Type B/C according to EN60898.

Extended Status Messaging support:

ATTENTION! Extended Status Messaging is supported by the following Smart Devices:

MRF	V2.60 or higher
Room Manager	V41c or higher
Smart Home Controller	V2.21 or higher
USB RF Communication stick	V2.10 or higher
Ethernet CI	V2.01 or higher

If one of the connected devices does not support the Extended Status Messaging format the actuator will switch back to the Standard Status Messaging format.

Router CROU-00/01-S, CROU-00/01-SL

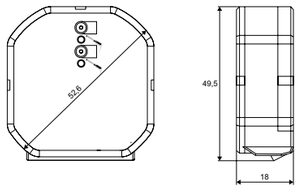

Technical Specifications	
Power supply	230 VAC, 50 Hz
Connections	Single-wired 1.5 mm² connections
Power consumption	0.23 W
Frequency	868.300 MHz
Type of transmission	Bi-directional, via coded telegrams
Indoor range	Typically 30 - 50 m, 2 walls + 1 ceiling (depending on wall thickness and material !!)
Function assignments	32
Routing paths	32
Degree of protection	IP20
Degree of soiling	2
Operating temperature	-5 to +55 °C
Storage/transportation temperature	-25 to +70 °C
Housing colour	Grey, RAL7035
Dimensions housing	H x W x D - 49.5 x 45.5 x 18 mm
Length of connection wires	150 mm
Approval	Printed onto the device
CROU-00/01-SL Logic Functions	
Logic functions	5
Inputs per Logic Function	2
Logic operations	OR, AND, GREATER THAN, LESS THAN, EQUAL

Energy Measurement Sensor CEMU-01/04

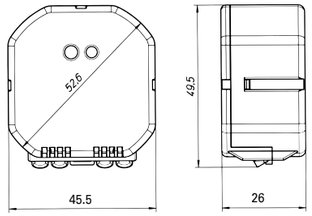

Technical Specifications	
Power supply	230 VAC, 50 Hz
Connections	Single-wired 1.5 mm² connections
Power consumption	0.42 VA
Pre-protection	Miniature circuit breaker 16 A, characteristic C
Max. current	16 A
Min. output	>3 W
Max. output	≤3680 W
Accuracy	5 % for 230-3680 W (-5 to 45 °C)
Measurement units	Energy in Wh, current in A, voltage in V, active power in W
Frequency	868.300 MHz
Type of transmission	Bi-directional, via coded telegrams
Indoor range	Typically 15-25 m, 1 wall + 1 ceiling (depending on wall thickness and material !!)
Degree of protection	IP20
Degree of soiling	2
Operating temperature	-5 to +45 °C
Storage/transportation temperature	-25 to +70 °C
Housing colour	Grey, RAL7035
Dimensions housing	H x W x D - 48.6 x 45.3 x 26.2 mm
Length of connection wires	150 mm
Approval	Printed onto the device

* Information: For technical reasons, the CEMU-01/04 energy meter sensor features a shorter RF range than usual xComfort standard products. "Routing" the signal may therefore be necessary in cases where the direct RF range is not sufficient. However, this does not impair the functionality of the energy meter function and will not be accepted as a reason for complaint.

Energy Measurement Sensor with external sensor CEMU-01/03

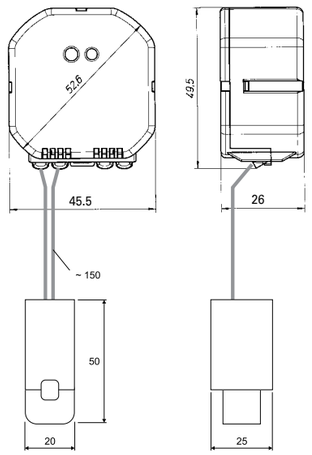

Technical Specifications	
Power supply	230 VAC, 50 Hz
Connections	Single-wired 1.5 mm² connections
Power consumption	0.42 VA
Pre-protection	Miniature circuit breaker 16 A, characteristic C
Max. current	16 A
Min. output	>15 W (over external sensor)
Max. output	≤23 kW (max. 100 A) (over external sensor)
Accuracy	10 %
Measurement units	Energy in Wh, current in A, voltage in V, active power in W
Frequency	868.300 MHz
Type of transmission	Bi-directional, via coded telegrams
Indoor range	Typically 15-25 m, 1 wall + 1 ceiling (depending on wall thickness and material !!)
Degree of protection	IP20
Degree of soiling	2
Operating temperature	-5 to +45 °C
Storage/transportation temperature	-25 to +70 °C
Housing colour	Grey, RAL7035
Dimensions housing	H x W x D - 48.6 x 45.3 x 26.2 mm
Length of connection wires	150 mm
Approval	Printed onto the device

* Information: For technical reasons, the CEMU-01/03 energy meter sensor features a shorter RF range than usual xComfort standard products. "Routing" the signal may therefore be necessary in cases where the direct RF range is not sufficient. However, this does not impair the functionality of the energy meter function and will not be accepted as a reason for complaint.

Binary Input 230VAC CBEU-02/03

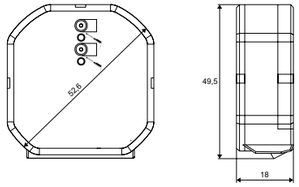

Technical Specifications	
Power supply	230 VAC +10% -15%, 50 Hz
Connections	Single-wired 1.5 mm² connections
Power standby	230 mW
Binary input voltage	Maximum 265 V
Input contact resistance IN to L	<10 kΩ reliably ON, >50 kΩ reliably OFF
Voltage difference IN to L	<1 V reliably ON, >3 V reliably OFF
Pre-protection	Miniature circuit breaker 16 A, characteristic C
Frequency	868.300 MHz
Type of transmission	Bi-directional, via coded telegrams
Indoor range	Typically 30 - 50 m, 2 walls + 1 ceiling (depending on wall thickness and material !!)
Degree of protection	IP20
Degree of soiling	2
Operating temperature	-5 to +45 °C
Storage/transportation temperature	-25 to +70 °C
Housing colour	Grey, RAL7035
Dimensions housing	H x W x D - 49.5 x 45.5 x 18 mm
Length of connection wires	150 mm
Approval	Printed onto the device

Binary Input CBEU-02/02

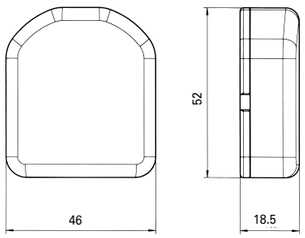

Technical Specifications	
Power supply	3 V via battery CR2477N
Connections	4-pole terminal strip or 4-pole terminal strip with set of cables; The binary input channel measures the contact resistance up to max. 220 Ω ON, and as of 10 kΩ min. OFF
Frequency	868.300 MHz
Type of transmission	Bi-directional, via coded telegrams
Indoor range	Typically 30 - 50 m, 2 walls + 1 ceiling (depending on wall thickness and material !!)
Degree of protection	IP20
Degree of soiling	2
Operating temperature	-5 to +40 °C
Storage/transportation temperature	-25 to +70 °C
Housing colour	White, similar to RAL9010
Dimensions housing	H x W x D - 51 x 46 x 18 mm
Approval	Printed onto the device

LeakageStop – Universal CWGE-00/01, CWGE-0U/31

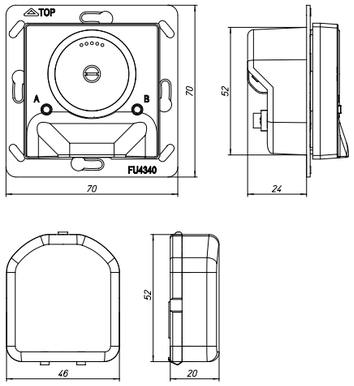

Technical Specifications	
Power supply	230 V AC, 50 Hz
Power consumption	Typical 230 mW (no alarm, output off)
Solenoid valve (load)	
Power supply	230 V AC, 50 Hz, max. 100 W
Type	NO and NC
Water sensor	
CWGE-00/01	2-wire sensor cable or sensor connection unit
CWGZ-00/01	On-board (single spot) or external sensor cable (with flat-cable connector)
Frequency	868.300 MHz
Max. RF-power	25 mW (ERP)
Type of transmission	Bi-directional, via coded telegrams
Indoor range	Typically 30 - 50 m, 2 walls + 1 ceiling depending on wall thickness and material)
Degree of protection	IP20
Degree of soling	2
Operating temperature	-5 to +55 °C
Storage/transportation temperature	-25 to +70 °C
Housing colors	
CWGE-00/01 (Main device)	
CWGE-0U/31	Pure white, gloss
CWGZ-CM/03	Cover for main device, silver, matt
CWGZ-CM/09	Cover for main device, jet black, matt
CWGZ-00/01 (Sensor connection unit)	
CWGZ-0S/01	Pure white, matt
CWGZ-CS/03	Cover for sensor connection unit, silver, matt
CWGZ-CM/08	Cover for main device, signal white, matt
CWGZ-CS/09	Cover for sensor connection unit, jet black, matt
All connections CWGE-00/01	
Method	Push-in with spring connection
Stripping length	8 mm
Cross section	
Solid core	0.2 – 1.5 mm²
Flexible core	0.2 - 1.5 mm²
AWG	28 – 14
Ferrule w. plastic slave	0.25 – 0.75 mm²
Ferrule w/o plastic slave	0.25 – 1.5 mm²
2-wire connections CWGZ-00/01	
Method	Screw connection with tension sleeve
Stripping length	5 mm
Cross section	
Solid core	0.14 – 1.5 mm²
Flexible	0.14 - 1.5 mm²
AWG	26 - 16
Ferrule w. plastic slave	0.25 – 0.5 mm²
Ferrule w/o plastic slave	0,25 – 0.5 mm²
Torque	0.22 Nm - 0.25 Nm
Dimensions	
CWGE-0U/31	H x W x D – 70 x 70 x 39 mm
CWGZ-0S/01	H x W x D – 52 x 46 x 20 mm

LeakageStop – Detector, battery CWGA-00/01, CWGA-0D/01

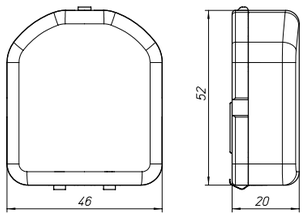

Technical Specifications	
Power supply	3 V via CR2477N battery
Service life of battery	Typically up to 5 years if no alarms occur. With alarm(s) it depends on the duration of the acoustic and LED alarms
Water sensor	On-board (single spot) or external sensor cable (with flat-cable connector or 2-wires)
Frequency	868.300 MHz
Max. RF-power	25 mW (ERP)
Type of transmission	Bi-directional, via coded telegrams
Indoor range	Typically 30 - 50 m, 2 walls + 1 ceiling depending on wall thickness and material)
Degree of protection	IP20
Degree of soling	2
Operating temperature	-5 to +45 °C
Storage/transportation temperature	-25 to +70 °C
Housing Colors	
CWGA-0D/01	Pure white, matt
CWGZ-CM/03	Cover, silver, matt
CWGZ-CM/09	Cover, jet black, matt
Connections (2-wire)	
Method	Screw connection with tension sleeve
Stripping length	5 mm
Cross section	
Solid core	0.14 – 1.5 mm^2
Flexible	0.14 - 1.5 mm^2
AWG	26 - 16
Ferrule w. plastic slave	0.25 – 0.5 mm^2
Ferrule w/o plastic slave	0.25 – 0.5 mm^2
Torque	0.22 Nm - 0.25 Nm
Dimensions	
CWGA-0D/01	H x W x D – 52 x 46 x 20 mm

Temperature Input CTEU-02/01

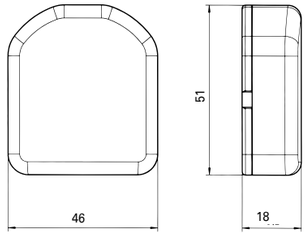

Technical Specifications	
Power supply	3 V via battery CR2477N
Connections	4-pole terminal strip 2 inputs for CSEZ-01/01 Suitable for Comfort Mode only
Frequency	868.300 MHz
Type of transmission	Bi-directional, via coded telegrams
Indoor range	Typically 30 - 50 m, 2 walls + 1 ceiling (depending on wall thickness and material !!)
Service life of the battery	Approx. 5-7 years, depending on application and type of battery
Degree of protection	IP20
Degree of soiling	2
Operating temperature	-5 to +40 °C
Storage/transportation temperature	-25 to +70 °C
Housing colour	White, similar to RAL9010
Dimensions housing	H x W x D - 51 x 46 x 18 mm
Approval	Printed onto the device

Multifunctional pushbutton, 55x55 mm, CTSA-01/04, CTSA-02/04, CTSA-04/04

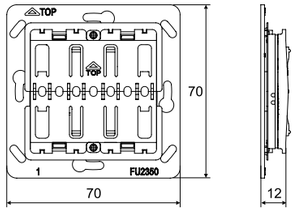

Technical Specifications	
Power supply	3 V via CR2450 battery
Number of rockers	Type-dependent
Frequency	868.300 MHz
Type of transmission	Bi-directional, via coded telegrams
Indoor range	Typically 30 - 50 m, 2 walls + 1 ceiling (depending on wall thickness, material, used rocker and frame !!)
Service life of the battery	Approx. 10 years (= battery life) Depending on the application, battery manufacturer, time of actuation: typically 120,000 switching operations at room temperature or 40,000 blinds operations at room temperature or 24,000 dimming cycles with a dimming time of 5 s at room temperature
Temperature sensor	
Temperature range	0 - 40 °C
Accuracy	± 0.5 °C, 15 to +40 °C
Humidity sensor	
Relative humidity range	5 - 95 %
Accuracy	± 5 % relative humidity
Degree of protection	IP20
Degree of soiling	2
Operating temperature	-5 to +45 °C
Storage/transportation temperature	-25 to +70 °C
Housing colour of the push-button base	Similar to RAL7035
Housing colour of the the mounting plate	Similar to RAL7035
Dimensions of the push-button base	H x W x D - 55 x 55 x 12.2 mm
Dimensions of the the mounting plate	H x W x D - 70 x 70 x 10 mm
Approval	Printed onto the device

Merten	Gira	Busch Jaeger	Jung	Berker	Siemens	Elko	Kopp
1-M	Standard 55	Carat*	AS	S.1	Delta line	RS16	ALASKA
Atelier M	E2	Pur Stainless steel*	A 500	B.1	Delta vita	Plus	
M-Smart	Event	Solo*	A plus	B.3	Delta miro		
M-Arc	Esprit	Future*	A creation	B.7 glass	Delta profil**		
M-Star	Profile 55	Future linear*	A plus				
M-Plan	E22	CZ Future*					
M-Plan II		Busch-balance® SI					
M-Plan metal							
M-Plan glass							

* only with Busch Jaeger intermediate frame
** only with Siemens intermediate frame

Note:
RECOMMENDATIONS for installation:
- fix the device approx. 1.5 m above floor level
- at a distance of 0.2 m min. from door frames (draft)
- install the device opposite the heat source, if possible
- keep ventilation slots of the device clear and clean

DO NOT install the device:
- at/next to a window, behind doors or behind curtains/coat racks
- on external walls or on condensing walls
- above/next to heaters, chimneys, air conditioning …
- above/next to electrical devices (TV, computer ...)
- exposed to direct sunlight or exposed to draft (ventilation)

Push-button universal 55x55 mm without LED CTAA-01/04, CTAA-02/04, CTAA-04/04

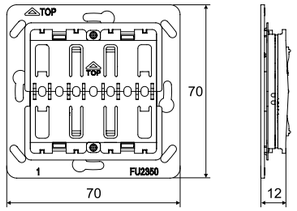

Technical Specifications	
Power supply	3 V via battery CR2450
Number of rockers depending on type	
Frequency	868.300 MHz
Type of transmission	Bi-directional, via coded telegrams
Indoor range	Typically 30 - 50 m, 2 walls + 1 ceiling (depending on wall thickness, material, used rocker and frame !!)
Service life of the battery	Approx. 10 years (= battery life) according to application, battery manufacturer, time of actuation: typically 120,000 switching operations at room temperature respectively 40,000 blind operations at room temperature respectively 24,000 dimming cycles at 5 s dimming time and room temperature
Degree of protection	IP20
Degree of soiling	2
Operating temperature	-5 to +45 °C
Storage/transportation temperature	-25 to +70 °C
Housing colour of the push-button base	Similar to RAL7035
Housing colour of the the mounting plate	Similar to RAL7035
Dimensions of the push-button base	H x W x D - 55 x 55 x 12.2 mm
Dimensions of the the mounting plate	H x W x D - 70 x 70 x 10 mm
Approval	Printed onto the device

Merten	Gira	Busch Jaeger	Jung	Berker	Siemens	Elko	Kopp
1-M	Standard 55	Carat*	AS	S.1	Delta line	RS16	ALASKA
Atelier M	E2	Pur Stainless steel*	A 500	B.1	Delta vita	Plus	
M-Smart	Event	Solo*	A plus	B.3	Delta miro		
M-Arc	Esprit	Future*	A creation	B.7 glass	Delta profil**		
M-Star	Profile 55	Future linear*	A plus				
M-Plan	E22	CZ Future*					
M-Plan II		Busch-balance® SI					
M-Plan metal							
M-Plan glass							

* only with intermediate frame Busch Jaeger
** only with intermediate frame Siemens

Room Controller Touch, CRCA-0x/xx

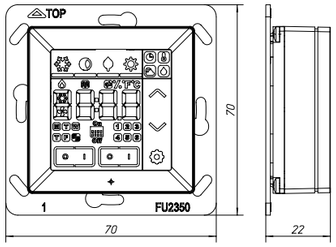

Technical Specifications	
Temperature sensor internal	
Temperature range	0-40 °C
Accuracy	± 0.5 °C, 15 to +40 °C
Factory default set-points setting	
Heating	Frost 10 °C, Night 18 °C, Economy 19 °C, Comfort 21 °C
Cooling	Overheat 32 °C, Night 28 °C, Economy 26 °C, Comfort 24 °C
Hysteresis	± 0.5 °C
Temperature sensor external	
Input	PT1000 (CSEZ-01/01, CSEZ-01/36)
Humidity sensor internal	
Relative humidity range	5-95 %
Accuracy within the measuring range	± 5 % relative humidity
Factory default set-points setting	Relative humidity 50 %
Hysteresis	± 5 %
General	
Power supply	
Batteries	3 V via 2x LR03 (AAA)
Power supply unit	12-24 V DC or AC, external power supply unit (CMMZ-00/12, CMMZ-00/13)
Service life of the battery	Typically 2 years, depending on application and type of battery
Frequency	868.300 MHz
Type of transmission	Bi-directional, via coded telegrams
Indoor range	Typically 30 - 50 m, 2 walls + 1 ceiling (depending on wall thickness and material !!)
Degree of protection	IP20
Degree of soiling	2
Operating temperature	0 to +40 °C
Storage/transportation temperature	-25 to +70 °C
Housing colour	
CRCA-0x/08	Pure white, gloss
CRCA-0x/09	Anthracite, matt
CRCA-0x/10	Traffic white, gloss
CRCA-0x/11	Alpine white, gloss
CRCA-0x/12	Signal white (similar to RAL9003), gloss
CRCA-0x/13	Jet black (similar to RAL9005), matt
CRCA-0x/14	Silver, matt
CRCA-00/15	Alpine white, matt
Dimensions	H x W x D - 55 x 55 x 21 mm
Approval	Printed onto the device
All connections	
Stripping length	6 mm
Cross section	
Solid core	0.14-0.5 mm^2
Stranded core	0.2-0.5 mm^2

Note:
RECOMMENDATIONS for installation:
- fix the device approx. 1.5 m above floor level
- at a distance of 0.2 m min. from door frames (draft)
- install the device opposite the heat source, if possible
- keep ventilation slots of the device clear and clean

DO NOT install the device:
- at/next to a window, behind doors or behind curtains/coat racks
- on external walls or on condensing walls
- above/next to heaters, chimneys, air conditioning …
- above/next to electrical devices (TV, computer ...)
- exposed to direct sunlight or exposed to draft (ventilation)

xComfort Bridge CBCA-00/01

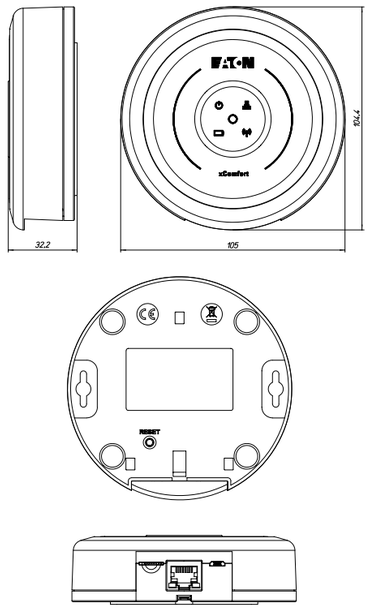

Technical Specifications		
Power supply	5 VDC, 0.2 A, power unit connector, separate power unit	
Power consumption	Typical <0.5 W	
Pre-protection	Miniature circuit breaker 16 A, characteristic C	
LED	**Color**	**Purpose**
Power LED	Green (blinks every 5 s)	Normal Operation
	Yellow	During startup
	Orange	During Software Update
Network LED	Green	Normal Operation
	Red	Network not connected
	Orange	Network connected but no IP address yet
Battery LED	Green	Normal Operation
	Orange	Battery supplied device empty
RF LED	Green	Normal Operation
	Yellow	Message sent
	Blue	Message received
	Red	RESET button: Back to factory sequence started
LED ring (all leds)	Green	Normal Operation
	Blue	Learning mode active
	Orange (blinking)	One device reaches 0 battery (empty)
RESET button	Back to factory:	Step 1: Press button >0.5 s (<1 s). RF-LED turns RED
		Step 2: Press button >5 s. RF-LED needs to blink 5x

Connections	
USB	Power connection
MICRO-SD	Future
LAN	Automatic assignment of the IP address via DHCP
Boot time	< 10 s
RF	868.300 MHz (xComfort compatible)
Max RF power	25 mW (ERP)
Type of transmission	Bi-directional, via coded telegrams
Indoor range	"Typically 30 - 50m, 2 walls + 1 ceiling (depending on wall thickness and material !!)"
Degree of protection	IP20
Degree of soiling	2
Operating temperature	+5 to +45 °C
Storage/transportation temperature	-25 to +70 °C
Housing colour	Similar to RAL9010
Dimensions housing	105 x 105 x 31 mm (H x W x D)
Approval	Printed onto the device

Smart Home Controller CHCA-00/01

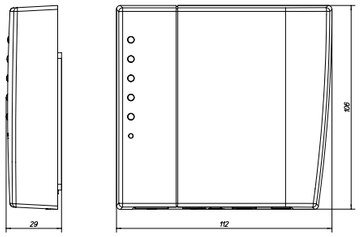

Technical Specifications		
Power supply	5 VDC, 1 A, power unit connector, separate power unit	
Power consumption	Typical <2 W (without any device on USB)	
Pre-protection	Miniature circuit breaker 16 A, characteristic C	
Display	(for more details please see mounting instructions)	
Symbol	LED	
	Power	
	Network connection	
	RF Traffic	
	System message	
	Battery status (assigned sensors)	
Symbol	Push-button	
	Recovery	
MRF	Icon	Function
>MRF2.19	Double click on icon in MRF	Identify Smart Home Controller 30 s green flashing: identify
Connections		
USB A	Not used	
USB B	Not used	
MICRO-SD	Used for reset-purposes only	
LAN	Automatic assignment of the IP address via DHCP username: admin password: admin	
Minimum distance to other devices (e.g.: WLAN router)	> 0.5 m	
Boot time	< 6 min.	
Frequency	868.300 MHz	
Type of transmission	Bi-directional, via coded telegrams	
Indoor range	Typically 30 - 50 m, 2 walls + 1 ceiling (depending on wall thickness and material !!)	
Degree of protection	IP20	
Degree of soiling	2	
Operating temperature	+5 to +45 °C	
Storage/transportation temperature	-25 to +70 °C	
Housing colour	Similar to RAL9010	
Dimensions housing	H x W x D - 112 x 106 x 29 mm	
Approval	Printed onto the device	
For SHC projects with ECI's please read FAQ on eaton.eu/xcomfort before ordering!		

Ethernet Communication Interface ECI LAN, CCIA-02/01, CCIA-03/01

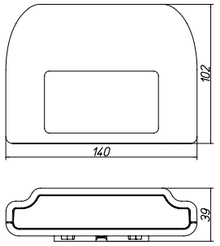

Technical Specifications	
Power supply	
CCIA-02/01	5-24 VDC - TRS connector, separate mains adapter 12 VDC (118809) - Mini USB connector, separate mains adapter (155449) or USB of PC - TRS connector/mini USB to be selected via a switch
CCIA-03/01	PoE, 36-57 VDC
Power consumption	2.5 W
Display	
LED orange, LAN PWR	ECI supply and LAN connection ok
LED green, LAN Data	ECI LAN data are being transmitted
LED red, Prog ON/OFF	- Ident 25x flashing, for ECI identification - Data transmission RF-ECI - Reset ECI
Operation	
Supply switch	ATo select supply via TRS connector or mini USB (CCIA-02/01)
Prog ON/OFF push-button	Reset
LAN	RJ45 connector
Network factory setting	IPv4: 192.168.42.30 IPv6: fd88:8d0d:632a:d855::30/64 username: admin password: admin
Frequency	868.300 MHz
Type of transmission	Bi-directional, via coded telegrams
Indoor range	Typically 30 - 50 m, 2 walls + 1 ceiling (depending on wall thickness and material !!)
Degree of protection	IP20
Degree of soiling	2
Operating temperature	+5 to +55 °C
Storage/transportation temperature	-25 to +70 °C
Housing colour	Similar to RAL9001
Dimensions housing	L x W x D - 140 x 102 x 39 mm
Approval	Printed onto the device

Universal Motion Sensor CBME-02/01, CBMD-02/xx

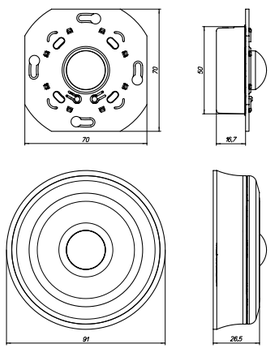

Technical Specifications	
Power supply	
Mains	230 VAC +10% -15%, 50 Hz
Battery Type	CR2450 3V
Battery service life time	Up to 5 years (TYP)
Detection	
Area (Ceiling mount)	Depending on movement max. Ø 5 m mounted at 2.5 m
Angle	90°
Range (Front view)	Depending on movement max. 8 m
On device settings	
Sensitivity	Low .. high (6 steps)
Light sensitivity	Night .. Day&Night (6 steps)
Switch off delay	10 s .. 120 min
Detection indication	ON/OFF
Degree of protection	IP20
Operating temperature	+5 to +45°C
Storage/transport temperature	-25 to +70°C
Housing colour	
CBMD-02/01	Pure white (similar to RAL9010)
CDMD-02/02	Jet black (similar to RAL9005)
CDME-02/01	No housing
Dimensions (D x H)	
Surface mount	Ø91 x 30 mm
Built-in depth (recessed mount)	Ø50 x 16.7 mm
Frequency	868.300 MHz (xComfort compatible)
Max RF power	25 mW (ERP)
Type of transmission	Bi-directional, via coded telegrams
Indoor range	Typically 30-50 m, 2 walls + 1 ceiling (depending on wall thickness and material !!)
Approval	Printed on the device

PIR Motion Sensor CBMA-02/01

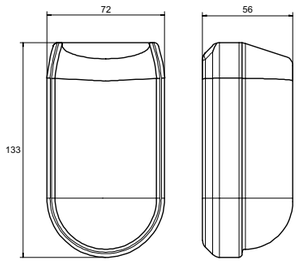

Technical Specifications	
Power supply	3 V via 2x LR03 (AAA)
Motion sensor	PIR sensor
Area covered	110°, max. 12 m at a mounting height of 2.2 m
Time-setting for channel A	30 s, 1 min, 2 min, 3 min, 5 min, 10 min, 20 min, 30 min
Setting for brightness channel A	Night, Twilight, Day
Setting for impulses	1, 3, 5, 7
Frequency	868.300 MHz
Type of transmission	Bi-directional, via coded telegrams
Indoor range	Typically 30 - 50 m, 2 walls + 1 ceiling (depending on wall thickness and material !!)
Service life of the battery	Approx. 2-3 years, depending on application and type of battery
Degree of protection	IP20
Degree of soiling	2
Operating temperature	+5 to +40 °C
Storage/transportation temperature	-25 to +70 °C
Housing colour	Similar to RAL9003
Dimensions housing	H x W x D - 133 x 72 x 56 mm
Approval	Printed onto the device

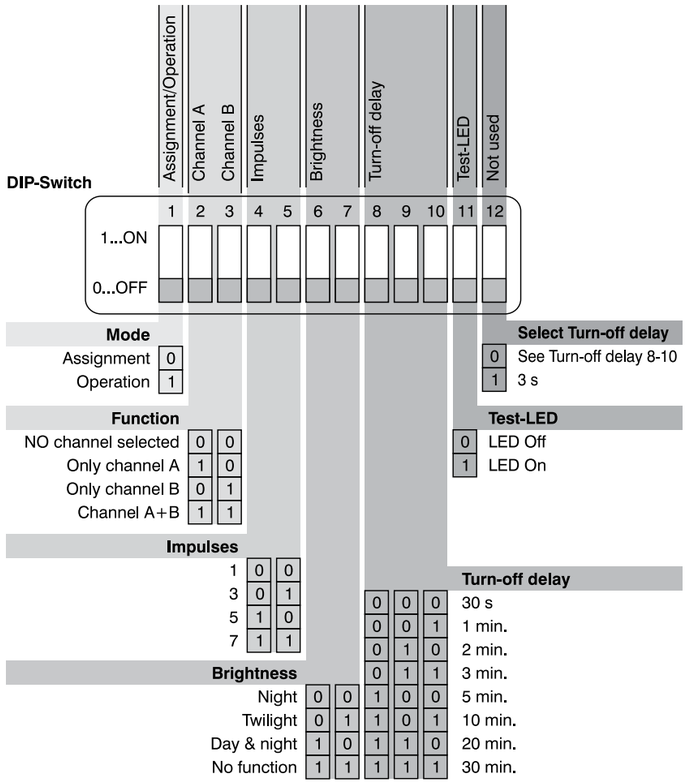

Power Supply Unit for Motion Sensor CMMZ-00/08

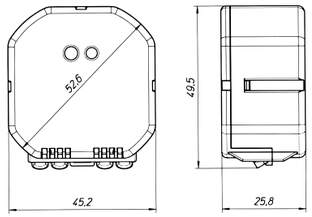

Technical Specifications	
Power supply	230 VAC, 50 Hz
Connections	Single-wired 1.5 mm² connections
Output voltage	max. 14.5 VAC (no-load operation)
Output power	max. 0.25 VA, short-circuit proof max. 1 PIR Motion sensor, CBMA-02/01
Pre-protection	Miniature circuit breaker 16 A, characteristic B
Degree of protection	IP20
Degree of soiling	2
Operating temperature	-5 to +45 °C
Storage/transportation temperature	-25 to +70 °C
Housing colour	Grey, RAL7035
Dimensions housing	H x W x D - 48.6 x 45.3 x 26.2 mm
Length of connection wires	150 mm
Approval	Printed onto the device

xComfort Window/Door Sensor

Sensor

Magnet

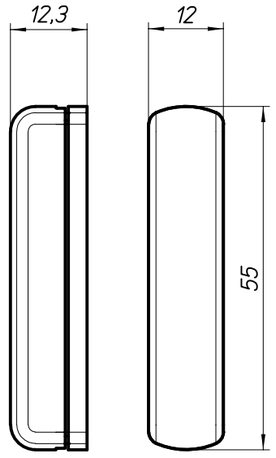

Technical specifications	
Sensor behavior	
ON if closed	Factory default
ON if opened	Selectable
Max. distance	
Fe	< 10mm (sensor/magnet)
None Fe	< 15mm (sensor/magnet)
Power supply	3V via 1x CR2
Service life of the battery	Typically up to 5 years, depending on the application
Degree of protection	IP20
Degree of soiling	2
Operating temperature	0 to +45 °C
Storage/transportation temperature	-25 to +70 °C
Housing colour	
CDWA-01/3a	Warm white, gloss (similar to RAL9003)
CDWA-01/3b	Bright white, gloss (similar to RAL2909205)
CDWA-01/3c	Grey, gloss (similar to RAL7011)
CDWA-01/3d	Brown, gloss
Dimensions	
Sensor	103 x 19 x 29 mm (H x W x D)
Magnet	55 x 12 x 12 mm (H x W x D)
Frequency	868.300 MHz
Type of transmission	Bi-directional, via coded telegrams
Indoor range	Typically 30 - 50 m, 2 walls + 1 ceiling (depending on wall thickness and material !!)
Approval	Printed onto the device

Switching Plug CSAP-01/xy-12E

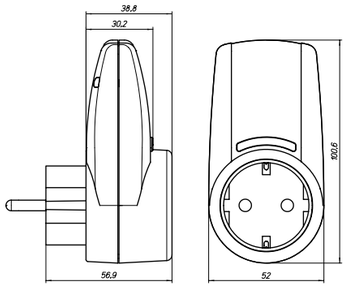

F-Type, Side earthings

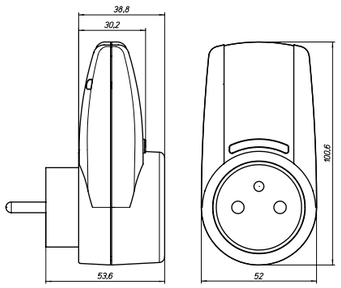

E-Type, Earthing pin

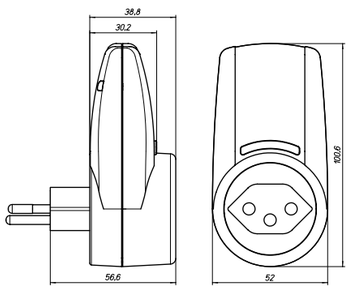

J-Type, S13

Technical Specifications	
Power supply	230 VAC +10% -15%, 50 Hz
Plug types	
CSAP-01/**x**y-12E	F-Type, Side earthings E-Type, Earthing pin J-Type, S13
Plug colours	
CSAP-01/x**y**-12E	5: Traffic white a: Grey
Load	R, L, C, LED, 12 A (at 40 °C, Derating*)
Switching technology	Eaton patented Hybrid switching technology
Inrush current (typically)	500 A @ 200 µs, 300 A @ 1 ms, 200 A @ 3 ms
Power standby (typically)	200 mW
Energy measurement sensor	3-2760 W, 5 % (>3 W)
Measurement units	Energy in kWh, active power in W
Internal protection	Overvoltage, temperature (load will be disconnected)
Pre-protection	Miniature circuit breaker 16 A, characteristic C
Frequency	868.300 MHz
Type of transmission	Bi-directional, via coded telegrams
Indoor range	Typically 30 - 50 m, 2 walls + 1 ceiling (depending on wall thickness and material !!)
Function assignments	32
Routing paths	32
Degree of protection	IP20
Degree of soiling	2
Operating temperature	-5 to +55 °C * Derating

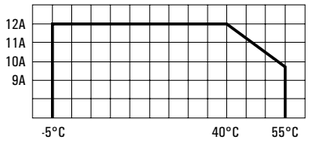

Storage/transportation temperature	-25 to +70 °C
Dimensions housing	H x W x D - 100.3 x 52 x 56.9 mm
Approval	Printed onto the device

Basic Mode support:	
Button behaviour	Mode 1: LED Off Mode 2: LED On (white color) Mode 3: LED On (blue color) Mode 4: LED EMS (power consumption)

Extended Status Messaging support:

ATTENTION! Extended Status Messaging is supported by the following Smart Devices:

MRF	V2.60 or higher
Room Manager	V41a or higher
Smart Home Controller	V2.00 or higher
USB RF Communication stick	V2.00 or higher
Ethernet CI	V2.00 or higher

If one of the connected devices does not support the Extended Status Messaging format the actuator will switch back to the Standard Status Messaging format.

Dimming Plug CDAP-01/xy-1E

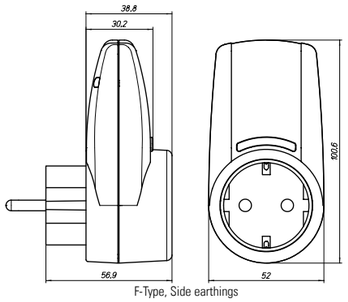

F-Type, Side earthings

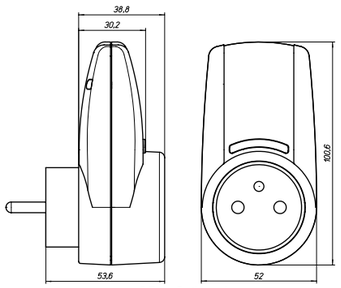

E-Type, Earthing pin

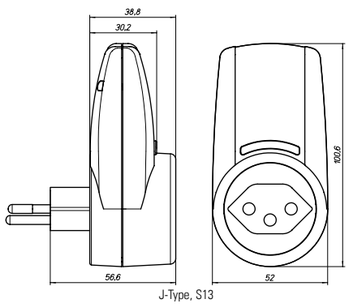

J-Type, S13

Technical Specifications	
Power supply	230 VAC +10% -15%, 50 Hz
Plug types	
CDAP-01/**x**y-1E	F-Type, Side earthings E-Type, Earthing pin J-Type, S13
Plug colours	
CDAP-01/x**y**-1E	5: Traffic white a: Grey
Load	R, L, C: 0-250 W (0-250 VA) (at 45 °C, Derating*) LED, ESL: 0-100 W (depending on the lamp type) **ATTENTION:** Please note the dimmer use trailing edge mode for incandescent lamps automatically. In case the dimmer is forced to control incandescent lamps in leading edge mode the output reduction factor is about 50 %.
Switching technology	Eaton Smart Dimming technology with overload protection. Auto trailing / leading edge mode.
Power standby (typically)	280 mW
Energy measurement sensor	0.5-250 W, 5 % ±0.5 W (>0.5 W)
Measurement units	Energy in kWh, active power in W
Internal protection	Overload, overvoltage, temperature (load will be disconnected)
Pre-protection	Miniature circuit breaker 16 A, characteristic C
Frequency	868.300 MHz
Type of transmission	Bi-directional, via coded telegrams
Indoor range	Typically 30 - 50 m, 2 walls + 1 ceiling (depending on wall thickness and material !!)
Function assignments	32
Routing paths	32
Degree of protection	IP20
Degree of soiling	2
Operating temperature	-5 to +55 °C * Derating

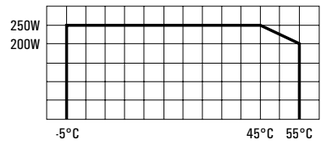

Storage/transportation temperature	-25 to +70 °C
Dimensions housing	H x W x D - 100.3 x 52 x 56.9 mm
Approval	Printed onto the device

Basic Mode support:	
Button behaviour	Mode 1: LED Off Mode 2: LED On (white color) Mode 3: LED On (blue color) Mode 4: LED EMS (power consumption)
Heating profiles	Profile 1: Standard Profile 2: LED 1 Profile 3: LED 2 Profile 4: LED 3 Profile 5: ESL Profile 6: On/Off

Extended Status Messaging support:

ATTENTION! Extended Status Messaging is supported by the following Smart Devices:

MRF	V2.60 or higher
Room Manager	V41c or higher
Smart Home Controller	V2.21 or higher
USB RF Communication stick	V2.10 or higher
Ethernet CI	V2.01 or higher

If one of the connected devices does not support the Extended Status Messaging format the actuator will switch back to the Standard Status Messaging format.

Heating Plug CHAP-01/xy-12E

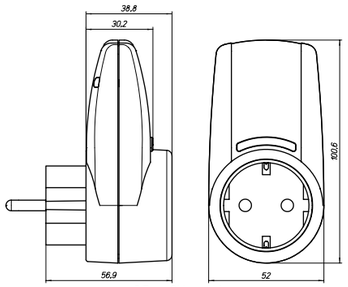

F-Type, Side earthings

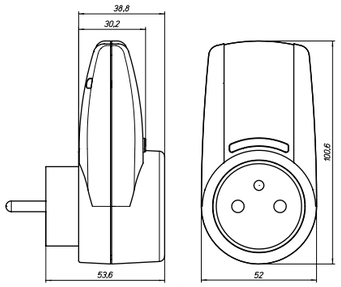

E-Type, Earthing pin

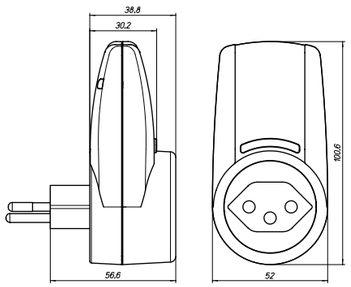

J-Type, S13

Technical Specifications	
Power supply	230 VAC +10% -15%, 50 Hz
Plug types	
CHAP-01/**x**y-12E	F-Type, Side earthings E-Type, Earthing pin J-Type, S13
Plug colours	
CHAP-01/x**y**-12E	5: Traffic white a: Grey
Load	R, L, C, 12 A (at 40 °C, Derating*)
Switching technology	Eaton patented Hybrid switching technology
Inrush current (typically)	500 A @ 200 µs, 300 A @ 1 ms, 200 A @ 3 ms
Power standby (typically)	190 mW
Energy measurement sensor	3-2760 W, 5 % (>3 W)
Measurement units	Energy in kWh, active power in W
Internal protection	Overvoltage, temperature (load will be disconnected)
Pre-protection	Miniature circuit breaker 16 A, characteristic C
Frequency	868.300 MHz
Type of transmission	Bi-directional, via coded telegrams
Indoor range	Typically 30 - 50 m, 2 walls + 1 ceiling (depending on wall thickness and material !!)
Function assignments	32
Routing paths	32
Degree of protection	IP20
Degree of soiling	2
Operating temperature	-5 to +55 °C * Derating

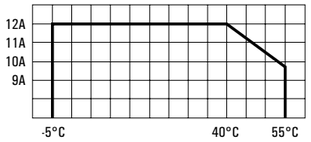

Storage/transportation temperature	-25 to +70 °C
Dimensions housing	H x W x D - 100.3 x 52 x 56.9 mm
Approval	Printed onto the device

Basic Mode support:	
Button behaviour	Mode 1: LED Off Mode 2: LED On (white color) Mode 3: LED On (blue color) Mode 4: LED EMS (power consumption)
Heating profiles	Profile 1: Floor Heating Foil Profile 2: Floor Heating Cable Profile 3: Electrical Radiator Profile 4: IR Panel Profile 5: Water based Radiator

Extended Status Messaging support:

ATTENTION! Extended Status Messaging is supported by the following Smart Devices:

MRF	V2.60 or higher
Room Manager	V41c or higher
Smart Home Controller	V2.21 or higher
USB RF Communication stick	V2.10 or higher
Ethernet CI	V2.01 or higher

If one of the connected devices does not support the Extended Status Messaging format the actuator will switch back to the Standard Status Messaging format.

Analogue Input 2-way CAEE-02/01

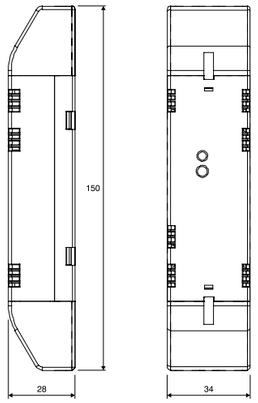

Technical Specifications	
Power supply	12-24 VDC, external power supply unit
Power consumption	0.25 VA (without sensors)
Power supply for sensors	External power supply unit looped through the device
Fine-wire fuse in the device	T 315 mA
Inputs: IN1, IN2	0-10 VDC, 0-20 mA, 4-20 mA, PT1000 in MRF configurable for each input
Frequency	868.300 MHz
Type of transmission	Bi-directional, via coded telegrams
Indoor range	Typically 30 - 50 m, 2 walls + 1 ceiling (depending on wall thickness and material !!)
Degree of protection	IP20
Degree of soiling	2
Operating temperature	-5 to +45 °C
Storage/transportation temperature	-25 to +70 °C
Housing colour	Grey, RAL7035
Dimensions housing	H x W x D - 150 x 34 x 28 mm
Approval	Printed onto the device

Analogue Actuator 0-10 VDC CAAE-01/01

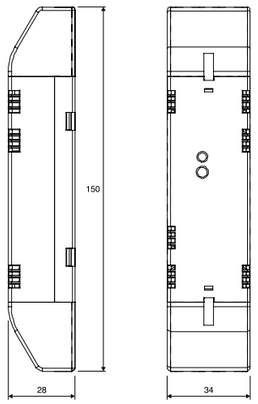

Technical Specifications	
Power supply	230 VAC, 50 Hz
All connections	Single-wired 1.5 mm² connections
Load	230 VAC, 50 Hz, 8 A resistive load The device switches L via LA Internal protection through thermal protection
Pre-protection	Miniature circuit breaker 16 A, characteristic C
Control output	0-10 VDC, max. 20 mA internal electronic overload protection
Frequency	868.300 MHz
Type of transmission	Bi-directional, via coded telegrams
Indoor range	Typically 30 - 50 m, 2 walls + 1 ceiling (depending on wall thickness and material !!)
Degree of protection	IP20
Degree of soiling	2
Operating temperature	-5 to +45 °C
Storage/transportation temperature	-25 to +70 °C
Housing colour	Grey, RAL7035
Dimensions housing	H x W x D - 150 x 34 x 28 mm
Approval	Printed onto the device

Analogue Actuator 1-10 VDC CAAE-01/02

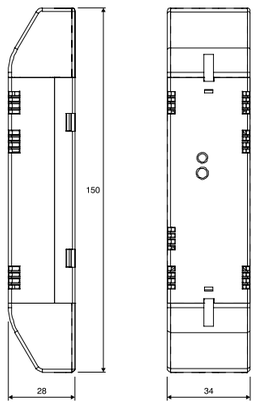

Technical Specifications	
Power supply	230 VAC, 50 Hz
All connections	Single-wired 1.5 mm² connections
Load	230 VAC, 50 Hz, 8 A resistive load The device switches L via LA Internal protection through thermal protection
Pre-protection	Miniature circuit breaker 16 A, characteristic C
Control output	1-10 VDC, max. 20 mA internal electronic overload protection
Frequency	868.300 MHz
Type of transmission	Bi-directional, via coded telegrams
Indoor range	Typically 30 - 50 m, 2 walls + 1 ceiling (depending on wall thickness and material !!)
Degree of protection	IP20
Degree of soiling	2
Operating temperature	-5 to +45 °C
Storage/transportation temperature	-25 to +70 °C
Housing colour	Grey, RAL7035
Dimensions housing	H x W x D - 150 x 34 x 28 mm
Approval	Printed onto the device

Smart Dimming Actuator CDAE-01/04, CDAE-01/05-I, CDAE-01/05-E

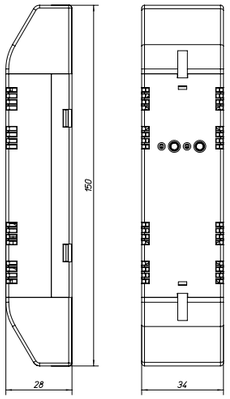

Technical Specifications	
Power supply	230 VAC +10% -15%, 50 Hz
Connections	Single-wired 1.5 mm² all connections
Load	
CDAE-01/04	0-250 W (0-250 VA) LED, ESL: 0-100 W (depending on the lamp type)
CDAE-01/05-.	0-500 W (0-500 VA) LED, ESL: 0-200 W (depending on the lamp type)

Note: Please note the dimmer use trailing edge mode for incandescent lamps automatically. In case the dimmer is forced to control incandescent lamps in leading edge mode the output reduction factor is about 50 %.

Power standby (typically)	
CDAE-01/0x(-I)	325 mW
CDAE-01/05-E	425 mW
Energy measurement sensor (-E)	0.5 W to 250 W / 500 W, 5 % ±,.5 W (>0.5 W)
Binary input voltage	Maximum 265 V
Input contact resistance IN to L	<10 kΩ reliably ON, >50 kΩ reliably OFF
Voltage difference IN to L	<1 V reliably ON, >3 V reliably OFF
Measurement units	Energy in kWh, active power in W
Energy measurement sensor	3-2760 W, 5 % (>3 W)
Internal protection	Overload, overvoltage, temperature, auto recovery (load will be disconnected)
Pre-protection	Miniature circuit breaker 16 A, characteristic C
Frequency	868.300 MHz
Type of transmission	Bi-directional, via coded telegrams
Indoor range	Typically 30 - 50 m, 2 walls + 1 ceiling (depending on wall thickness and material !!)
Function assignments	32
Routing paths	32
Degree of protection	IP20
Degree of soiling	2
Operating temperature	-5 to +55 °C

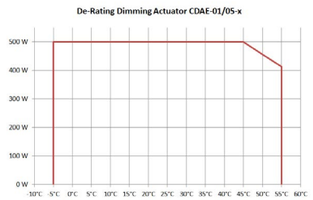

Note: Keep at least 35 mm distance in case several devices are used. Do not place the device near heat sources (transformers, halogen lamps etc.), keep a distance of approx. 200 mm. Do not place dimming actuators on top of each other. Allow for sufficient heat draw-off. Check max. operating temperature, reduce power where necessary.

Storage/transportation temperature	-25 to +70 °C
Housing colour	Grey, RAL7035
Dimensions housing	H x W x D - 150 x 34 x 28 mm
Approval	Printed onto the device

Basic Mode support:	
Local input mode	Push-button (Mode 1), Switch (Mode 2), Mixed (Mode 3), Rocker (Mode 4), Sensor (Mode 5)
DIM profiles	R/L/C Standard, LED 1, LED 2, LED 3, CFL/ESL, ON/OFF (Switching)

Extended Status Messaging support:

ATTENTION! Extended Status Messaging is supported by the following Smart Devices:

Room Manager	V41c or higher
Smart Home Controller	V2.1 or higher
USB RF Communication stick	V2.10 or higher
Ethernet CI	V2.01 or higher

If one of the connected devices does not support the Extended Status Messaging format the actuator will switch back to the Standard Status Messaging format.

Impulse Counting Input CIZE-02/01

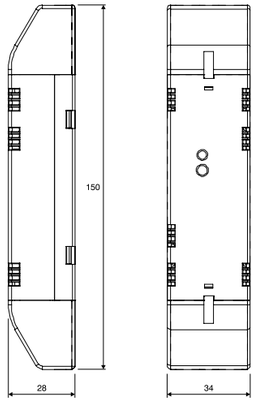

Technical Specifications	
Power supply	12-24 VDC, external power supply unit
Power consumption	0.25 VA
Fine-wire fuse in the device	T 315 mA
Inputs: IN1, IN2	S0 according to DIN43864
Max. frequency input	16 Hz
Kind of counter	Incremental
Frequency	868.300 MHz
Type of transmission	Bi-directional, via coded telegrams
Indoor range	Typically 30 - 50 m, 2 walls + 1 ceiling (depending on wall thickness and material !!)
Degree of protection	IP20
Degree of soiling	2
Operating temperature	-5 to +45 °C
Storage/transportation temperature	-25 to +70 °C
Housing colour	Grey, RAL7035
Dimensions housing	H x W x D - 150 x 34 x 28 mm
Approval	Printed onto the device

2-Channel Remote Control CHSZ-02/02

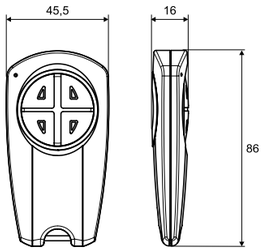

Technical Specifications	
Power supply	3 V via battery CR2430
Channels	2
Display: 1 yellow LED	Indication of function and reception
Operation	2 operating keys (with 2 functions each)
Frequency	868.300 MHz
Type of transmission	Bi-directional, via coded telegrams
Indoor range	Typically 30 - 50 m, 2 walls + 1 ceiling (depending on wall thickness and material !!)
Service life of the battery	Approx. 3-5 years, depending on application and type of battery
Degree of protection	IP20
Degree of soiling	2
Operating temperature	+5 to +40 °C
Storage/transportation temperature	-25 to +70 °C
Housing colour	Similar to RAL7037
Dimensions housing	H x W x D - 86 x 45.5 x 16 mm
Approval	Printed onto the device

1-Channel Alarm Remote Control CHSZ-01/05

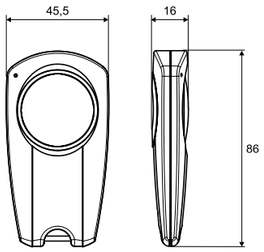

Technical Specifications	
Power supply	3 V via battery CR2430
Channels	1
Display: 1 yellow LED	Indication of function and reception
Operation	1 operating key
Frequency	868.300 MHz
Type of transmission	Bi-directional, via coded telegrams
Indoor range	Typically 30 - 50 m, 2 walls + 1 ceiling (depending on wall thickness and material !!)
Service life of the battery	Approx. 3-5 years, depending on application and type of battery
Degree of protection	IP20
Degree of soiling	2
Operating temperature	+5 to +40 °C
Storage/transportation temperature	-25 to +70 °C
Housing colour	Similar to RAL7037
Dimensions housing	H x W x D - 86 x 45.5 x 16 mm
Approval	Printed onto the device

12-Channel Remote Control CHSZ-12/03

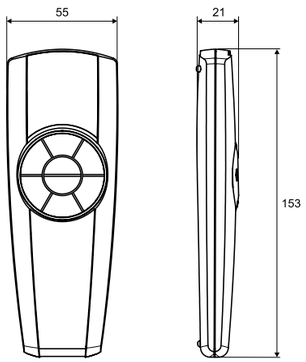

Technical Specifications	
Power supply	3 V via batteries LR03 (AAA)
Channels	6 x 2 = 12
Display	
1x LED yellow	Level 1: Display of function and reception
1x LED green	Level 2: Display of function and reception
Operation	2x6 pre-selection keys, 1 operating key (2 functions)
Frequency	868.300 MHz
Type of transmission	Bi-directional, via coded telegrams
Indoor range	Typically 30 - 50 m, 2 walls + 1 ceiling (depending on wall thickness and material !!)
Service life of the battery	Approx. 3-5 years, depending on application and type of battery
Degree of protection	IP20
Degree of soiling	2
Operating temperature	+5 to +40 °C
Storage/transportation temperature	-25 to +70 °C
Housing colour	Similar to RAL7037
Dimensions housing	H x W x D - 153 x 55 x 21 mm
Approval	Printed onto the device

12-Channel Remote Control with Display CHSZ-12/04

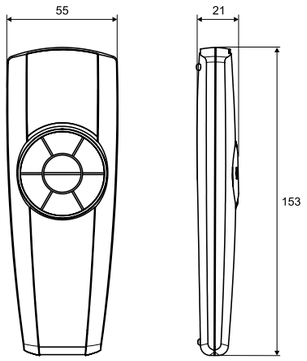

Technical Specifications	
Power supply	3 V via batteries LR03 (AAA)
Channels	12
Display	
LCD Display	Background lighting blue
1x LED yellow	Display of function and reception
Operation	12 functions, in menu selectablly
Power reserve time	2 minutes for the battery change
Frequency	868.300 MHz
Type of transmission	Bi-directional, via coded telegrams
Indoor range	Typically 30 - 50 m, 2 walls + 1 ceiling (depending on wall thickness and material !!)
Service life of the battery	Approx. 1-2 years depending on application, setting of display and type of battery
Interfaces	IR Interface for system-update EATON RF for configuration/operation
Degree of protection	IP20
Degree of soiling	2
Operating temperature	+5 to +45 °C
Storage/transportation temperature	-25 to +70 °C
Housing colour	Similar to RAL7037
Dimensions housing	H x W x D - 153 x 55 x 21 mm
Approval	Printed onto the device

xComfort Weather Station CWSA-04/01

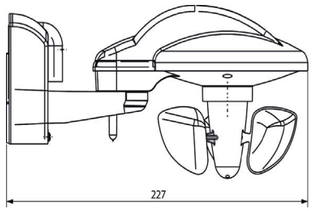

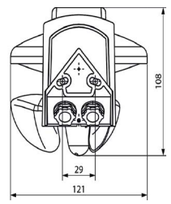

Technical Specifications	
Power supply	110 - 230 VAC, 50 -60 Hz
Stand-by power consumption	< 5.6 W
Measuring range brightness	1 - 100000 lux (3 directions)
Measuring range wind speed	2 - 30 m/s
Measuring rain	yes/no
Frequency	868.300 MHz
Type of transmission	Bi-directional, via coded telegrams
Indoor range	Typically 30 - 50 m, 2 walls + 1 ceiling (depending on wall thickness and material!)
Degree of protection	IP44
Degree of soiling	2
Operating temperature	-20 to +55 °C
Storage/transportation temperature	-30 to +70 °C
Housing color	Transparent
Dimensions housing	H x W x D - 108 x 227 x 121 mm
Approval	Printed onto the device

USB RF Configuration stick CKOZ-00/13

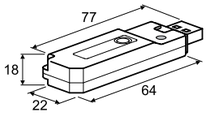

Technical Specifications	
Power supply	via PC/Laptop
Connection	USB
Display	2 Status LEDs
Frequency	868.300 MHz
Type of transmission	Bi-directional, via coded telegrams
Indoor range	Typically 30 - 50 m, 2 walls + 1 ceiling (depending on wall thickness and material !!)
Service life of the battery	Approx. 3-5 years, depending on application and type of battery
Degree of protection	IP20
Operating temperature	+5 to +40 °C
Storage/transportation temperature	-25 to +70 °C
Dimensions	H x W x D - 77 x 22 x 18 mm
Approval	Printed onto the device

USB RF Communication stick CKOZ-00/14

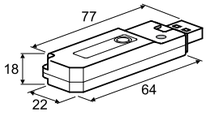

Technical Specifications	
Power supply	via PC/Laptop
Connection	USB
Display	3 Status LEDs
Frequency	868.300 MHz
Type of transmission	Bi-directional, via coded telegrams
Indoor range	Typically 30 - 50 m, 2 walls + 1 ceiling (depending on wall thickness and material !!)
Service life of the battery	Approx. 3-5 years, depending on application and type of battery
Degree of protection	IP20
Operating temperature	+5 to +40 °C
Storage/transportation temperature	-25 to +70 °C
Dimensions	H x W x D - 77 x 22 x 18 mm
Approval	Printed onto the device

Temperature Sensor CSEZ-01/01

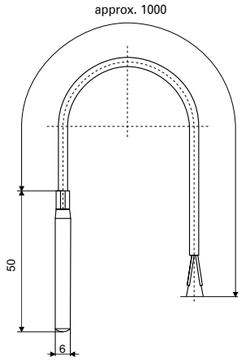

Technical Specifications	
Power supply	Via Temperature Input channel CTEU-02/01
Cable	Silicone, black, 2x 0.22 mm², 1 m
Measuring sleeve	Stainless steel, diameter = 6 mm, l = 50 mm
Measuring range	-50 to +200 °C
Sensor element	PT1000
Approval	Printed onto the device

Temperature Sensor CSEZ-01/36

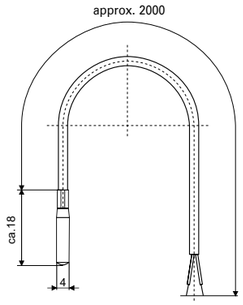

Technical Specifications	
Power supply	Via Temperature Input channel CTEU-02/01
Cable	Teflon, white, 2x 0.14 mm², 2 m
Measuring sleeve	Stainless steel, diameter = 4 mm, l = approx. 18 mm
Measuring range	-50 to +200 °C
Sensor element	PT1000
Approval	Printed onto the device

Surface-mounted Window Contact CSEZ-01/06, CSEZ-01/25

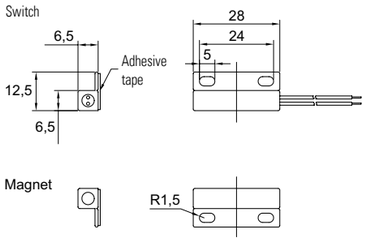

Technical Specifications	
Power supply	Via Binary Input CBEU-02/02
Contact connections	2-wire cable, white
Max. distance	15 mm (contact/magnet)
Type of contact	
CSEZ-01/06	Normally open contact
CSEZ-01/25	Normally closed contact
Max. contact load	
CSEZ-01/06	100 VDC, 0.5 A
CSEZ-01/25	30 VDC, 0.2 A
Degree of protection	IP20
Operating temperature	-5 to +45 °C
Storage/transportation temperature	-25 to +70 °C
Housing colour	Similar to RAL9003
Dimensions of the contact	H x W x D - 28 x 12.5 x 6.5 mm
Length of connection wires	2x 0.32 mm², approx. 0.45 m
Dimensions of the magnet	H x W x D - 28 x 12.5 x 6.5 mm
Approval	Printed onto the device

Fensterkontakt Einbau CSEZ-01/07

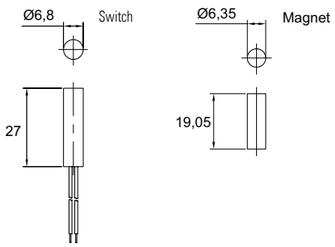

Technical Specifications	
Power supply	Via Binary Input CBEU-02/02
Contact connections	2-wire cable, white
Max. distance	20 mm (contact/magnet)
Type of contact	Normally open contact
Max. contact load	100 VDC/VAC, 0.5 A
Degree of protection	IP20
Operating temperature	-5 to +45 °C
Storage/transportation temperature	-25 to +70 °C
Housing colour	Similar to RAL9003
Dimensions of the contact	d = 6.8 mm, l = 27 mm
Length of connection wires	2x 0.32 mm², approx. 0.45 m
Dimensions of the magnet	d = 6.35 mm, l = 19 mm
Approval	Printed onto the device

RF Radiator Thermostat CHVZ-01/05

Technical Specifications	
Power supply	3 V battery (2x 1.5 V LR6/Mignon/AA)
Connection	M30 x 1.5 mm
Battery lifetime	Approx. 2 years (typically)
Display	LC display with backlight
Supported valve types	Heimeier, Junkers Landy + Gyr, MNG, Honeywell-Braukmann, Oventrop, Schlösser, Sipmolex, Valf Sanayii, Metrik Maxitrol, Watts, Wingenroth Wiroflex), R.B.M., Jaga, Siemens, Idmar)
Included adapters	Danfossl RAV 34 mm + pin, Danfoss RA 20 mm or 23 mm, Danfoss RAVL 26 mm
Available adapters	Herz, Comap, markaryds, RA (Tour & Andersson)
Frequency	868.300 MHz (xComfort compatible)
Degree of protection	IP20
Degree of soiling	2
Output power	+4 dBm
Operating temperature	+5 to +55 °C
Storage/transportation temperature	-25 to +70 °C
Housing colour	Traffic white
Dimensions	H x W x D - 56 x 68 x 89 mm
Approval	Printed onto the device

Radiator Valve NC CHVZ-01/04

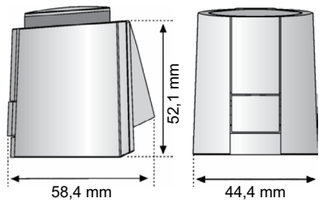

Technical Specifications	
Power supply	230 VAC ±10 %, 50/60 Hz
Connection plug-in	2x 0.75 mm², 1 m
Power consumption	1 W
Pre-protection	Miniature circuit breaker 16 A, characteristic C
Adjustment travel	4/5 mm
Adjustment force	100 N ±5 %
Contact	NC (closed when not energized)
Miscellaneous	First Open Function Plug-type fitting Function display Adjustment check
Types of fittings	Depending on the valve adapter
Degree of protection	IP54
Degree of soiling	2
Medium temperature	0 to +100 °C
Storage/transportation temperature	-25 to +60 °C
Permitted relative air humidity	Max. 80 % relative humidity
Housing colour	Similar to RAL9003 (traffic white)
Dimensions	H x W x D - 58,4 x 44,4 x 52,1+7 mm
Approval	Printed onto the device

Valve Adapter CMMZ-00/17, CMMZ-00/18, CMMZ-00/38

Technical Specifications	
Valve Adapter 1 CMMZ-00/17	
Adapter for	Danfoss RA
Type	Flange
Thread	Flange
Housing colour	Similar to RAL9016, clean-white
Dimensions housing	H x W x D - 40 x 40 x 30 mm
Valve Adapter 2 CMMZ-00/18	
Adapter for	Beulco (from 2006) SBK (from 1998) Cazzaniga Dumser Heimeier Honeywell IVAR MNG (from 1998) ONDA Ovendrop Reich (Verteiler) Schlösser Siemens Taco
Thread	M30 x 1.5 mm
Housing colour	Similar to RAL7035
Dimensions housing	H x W x D - 40 x 40 x 15mm
Valve Adapter 6 CMMZ-00/38	
Adapter for	Tour & Andersson Nereus Type 9440 (angle valve)
Thread	M28 x 1.5 mm
Housing colour	Similar to RAL6026, light green
Dimensions housing	H x W x D - 40 x 40 x 16 mm

Technical Specifications	
Operating voltage	230 V ±10% / 50 Hz
Power consumption in idle operation without connected components	<1 W
Fuse	T4AH
Max. numbers of actuators	6
Max. numbers of radiator drives	15 (max. inrush current 500 mA per drive)
Control direction radiator drives	Normal Close (NC)
Operating temperature	0 to +50 °C
Storage temperature	-20 to +70 °C
Protection type	IP20
Protection class	II
Connection terminals	screw-less terminals for 0.2 to 1.5 mm², vertical cable entry
Connection line	
massive	NYM-J/NYM-O (max. 5 x 1.5 mm²)
flexible	H03V2V2H2-F / H05V2V2H2-F
Strain relief	Integrated
Dimensions housing	H x L x D - 90 x 326.5 x 52 mm
Color	
Cover	Transparent, polished in the area of the LEDs
Casing	light grey (RAL7035)
Type of installation	Wall installation/DIN rail (TS35/35 x 7.5 mm)
Indicators (LED)	
Heating zone active	green (one LED per HZ)

Battery Type 1 CBTZ-00/01, Battery Type 2 CBTZ-00/02, Battery Type 4 CBTZ-00/04

Technical Specifications	
Type 1 CBTZ-00/01	
Type	Coin cell, 3 V, CR2430
Dimensions	Diameter = 24 mm, h = 3 mm
Type 2 CBTZ-00/02	
Type	Coin cell, 3 V, CR2477N
Dimensions	Diameter = 24 mm, h = 7,7 mm
Type 4 CBTZ-00/04	
Type	Coin cell, 3 V, CR2450
Dimensions	Diameter = 24 mm, h = 5 mm

Adhesive Strips CMMZ-00/01, CMMZ-00/24

Technical Specifications	
Material	Double-coated adhesive strips, Duolomont
Colour	Graphite black, similar to RAL 9011
Content of the set	For 10 push-buttons (20 pcs. adhesive strips)
Dimensions	L x W x H - 45 x 7 x approx. 1 mm

Screws and Dowels CMMZ-00/25

Technical Specifications	
Screws	Flat head screws, cross-recess screws
Dowels	Plastic wall dowels
Content of the set	For 10 push-buttons (20 screws and 20 dowels)
Dimensions	
Screws	d = 3 x 25 mm
Dowels	d = 4 x 20 mm

Push-Button Base Plate 55x55 mm CMMZ-00/22, Flat for universal mount

Technical Specifications	
Material	Polyamide PA66
Colour	Similar to RAL7035
Content of the set	For 10 push-buttons (10 pcs. push-button base plates)
Dimensions	H x W x D - 70 x 70 x 10 mm

Push-Button Base Plate 55x55 mm CMMZ-00/45, Installation box mount

Technical Specifications	
Material	Polyamide PA66
Colour	Similar to RAL7035
Content of the set	For 6 push-buttons (6 pcs. push-button base plates)
Dimensions	H x W x D - 70 x 70 x 20 mm

Cover Foil white CMMZ-00/27

Technical Specifications	
Material	Synthetic foil
Colour	White, similar to RAL9003
Content of the set	For 10 push-buttons (10 pcs. of foil)
Cleaning	Damp cloth
Dimensions	H x W x D - 80 x 80 x 0.5 mm

Cover Foil grey CMMZ-00/28

Technical Specifications	
Material	Synthetic foil
Colour	Grey, similar to RAL7001
Content of the set	For 10 push-buttons (10 pcs. of foil)
Cleaning	Damp cloth
Dimensions	H x W x D - 80 x 80 x 0.5 mm

RC Unit CMMZ-00/07

Technical Specifications	
Resistance / capacity	22 Ω / 0.22 µF
Rated Voltage	250 VAC
Dimensions	H x W x D - 24 x 12 x 17 mm
Approval	Printed onto the device

Setting in "Basic Mode"

In "Basic Mode" the functions of the devices can be assigned through activating the programming button and the respective push-button. Easy, without any complicated tools, PC or setting of DIP-switches etc.

Increasing the range through „Routing" (see Comfort Mode) is not possible in Basic Mode.

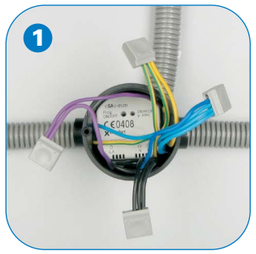

Install the actuator in the flush box and connect it

Activate the programming button (the red LED and the connected lamp are switched ON)

Push the corresponding push-button (the red LED and the connected lamps flash twice for confirmation)

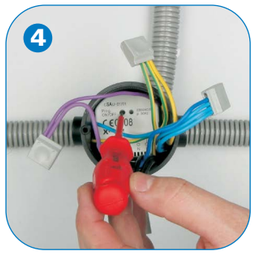

Activate the programming button a second time to finish the process (the LED and the connected lamp are switched OFF)

Setting in "COMFORT MODE"

Comfort Mode offers the opportunity for detailed and comfortable settings (e.g. operating time of shutters, time functions, flash functions, functions with command time, dimmer settings, settings for temperature sensors and much more).

All you need is a notebook/laptop. The free setting-software is easy to understand and clearly structured, so all the user has to do is to deal with the setting jobs as such.

If the system was first programmed in „Basic Mode" and the push-buttons were assigned to certain actuators, the functional connections are depicted as a single "line" when the system is read in. Detailed settings and adjustments can be made at any time ...

If no functions have been assigned yet, "Comfort Mode" enables you to assign a function by simply "drawing" a line between the actuator(s) and the sensor(s) on the screen.

The devices can also be given names which are (and stay) memorized in the devices.

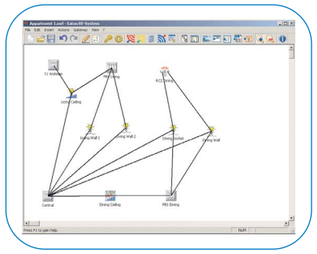

MRF 2.0 for Residential Buildings

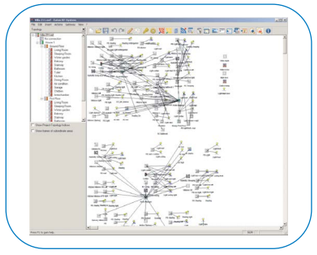

MRF 2.0 for Light Commercial Buildings

If one day the range should not be sufficient while taking the system into operation, the notebook/laptop will automatically and in the background calculate the routing (forwarding of data via actuators, for example).

Enhancements in the MRF2.0 version

- Modern and revised layout and design
- Code for professionals is generally unlocked
- Cancel and reset function
- Improved and faster reading of system pass words
- Improved reading and loading, shorter response times, re-naming while reading
- Reading of project parts, succession of reading/loading/quality of reception can be selected
- Adding of a background picture (bmp, jpg, gif, ...)
- Adding of project notes
- Adding of notes on each individual device
- Adding of grouping frames
- Enhanced documentation options
- Zoom function for large projects (50%, 100%)
- Enhanced selection mode for Copy/Delete/Shift
- Adding and configuration of virtual devices from a data base
- Easy connection assistant with an additional option for configuration
- Copying of projects and parts of projects
- „Manual" selection of routing
- Project topology for large projects - unambiguous project structure

Installation

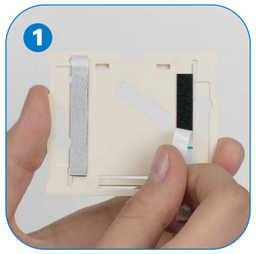
Simply stick the switch, temperature control etc. onto the wall

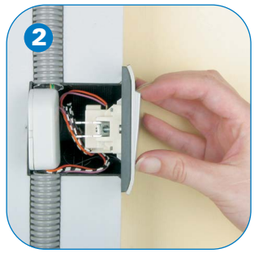
Integration of conventional switches with binary input into the wireless system

Both screw and plug-in terminals can be used

Incorporation of the actuator in the switch or installation box with cover

Installation of an actuator in the switch box with wireless push-button as a combined solution

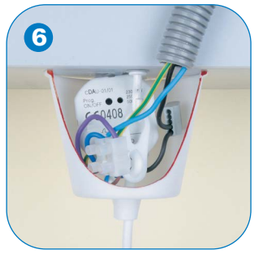
Installation of the actuator in the light fixture

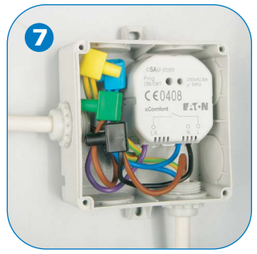
Installation of the actuator in a splash-proof box

Installation of the actuator in a cable channel box

Battery easy to replace, Service life of battery for push-button approx. 10 years

Battery easy to replace - Service life of battery for room temperature control approx. 7 years

CSAU-01/01-16
CSAU-01/01-16I
CSAU-01/01-16IE

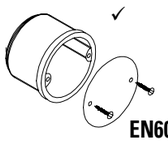

EN60670

ATTENTION!
CSAU-01/01-16, CSAU-01/01-16I, CSAU-01/01-16IE:
This device must be installed inside a mounting box (complying to EN60670) and behind an accessory or blank plate that uses at least 2 screw fixing points to secure it to the mounting box. Failure to do so could result in a fire hazard or electric shock under extreme external fault conditions.

Protective Device

Protection of actuators through 16 A Miniature Circuit Breakers, characteristic C, e.g. PLSM-C16/1N

Instructions for Installation in "Basic Mode"

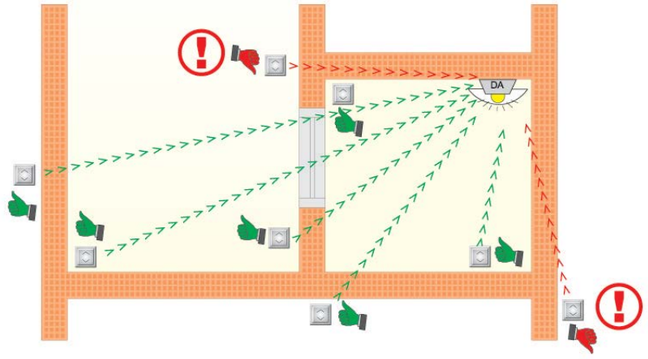

Transmitting range: Approx. 30-50 m indoors, typically 2 walls + 1 ceiling (depending on wall thickness and material, see page after the next "RF - Building Penetration Capacity"). Comfort Mode increases the range by "Routing".

Instructions for Installation in "COMFORT MODE"

Optimal indoor-placement of actuators

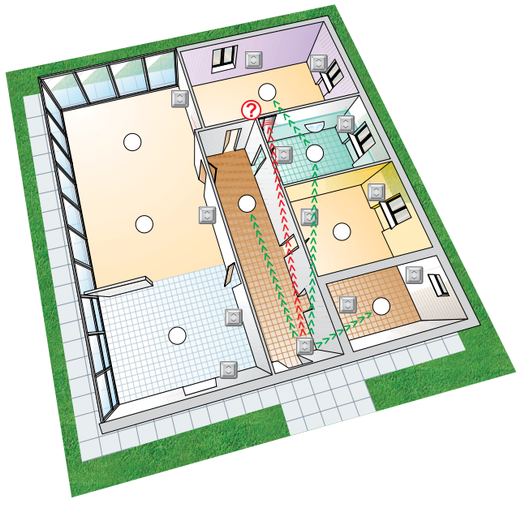
"Routing" allows for "alternative" transmission routes ...

Unfavorable indoor-placement of actuators

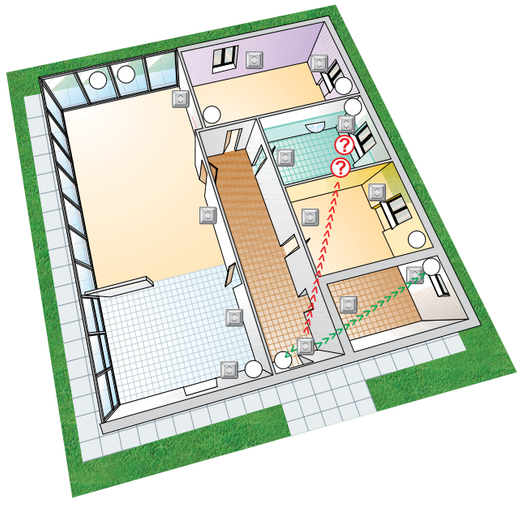
No "Routing" possible ...

Installation options: Actuators in the branch box

NO NEED to provide a major-size installation distributor. The actuators can be installed in branch boxes.

Installation options: Actuators installed in the light fixtures

NO NEED to provide a major-size installation distributor. Some of the actuators can be installed in branch boxes (blinds) and others in the light fixtures (lighting).

RF - Building Penetration Capacity

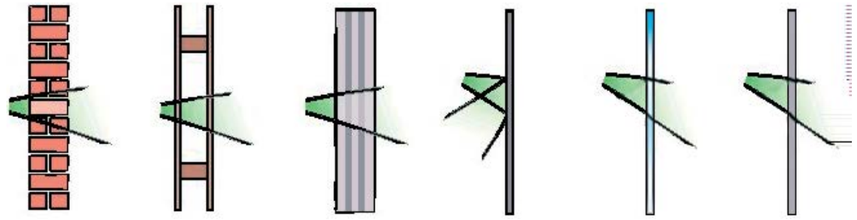

Brick-type wall approx. 60-90 %	Wood and wood frames with sand-wich- type plaster board approx. 80-95 %	Concrete with steel reinforcement approx. 20-60 %	Metal walls approx. 0-10 %	Ordinary glass approx. 70-90 % Insulating glass (metallized) approx. 30-60 %	Synthetic material approx. 80-95 %

⚠ Information: The percentages given are guideline values only. They may vary subject to the respective local conditions.

Number of telegrams

Correct wireless communciation can only be provided if the max. number of RF telegrams received/sent within one "RF cell" does not exceed 4 telegrams per second! This has to be arranged for during start-up, especially
- if two or more RF areas communicate via one or only few routers and need to exchange data cyclicyally and/or large quantities of data
- in large systems where many devices communicate with a single central device on a permanent basis (SHC, Bridge, ECI etc.)
- where several binary inputs need to be activated using the same push-button
- etc.

Functions of the switching actuator in the Basic Mode

RF Push-button:	ON / OFF
Remote control:	ON / OFF
Binary input:	
Mode 1:	Both channels: current impulse
Mode 2:	Both channels: ON / OFF
Mode 3:	Channel A: current impulse; channel B: ON / OFF
Mode 4:	Channel A: ON; channel B: OFF
Room controller:	Too cold: ON; too warm: OFF
Mains supply restored:	Last value
With low batterie:	Flashing

Functions of the dimming actuator in the Basic Mode

RF Push-button:	ON / OFF and brighter / darker
Remote control:	ON / OFF and brighter / darker
Binary input:	
Mode 1:	Both channels with push-button and dimming function
Mode 2:	Both channels only ON / OFF without brighter / darker function
Mode 3:	Channel A: push-button and dimming function Channel B: only ON / OFF without brighter / darker function
Mode 4:	Channel A: ON and brighter Channel B: OFF and darker
Room controller:	Too cold: ON; too warm: OFF (without dimming)
Mains supply restored:	Last value
With low batterie:	Flashing
Dimming time:	5 s
Dimming level:	20 to 100 %

Functions of the blinds actuator in the Basic Mode

RF Push-button:	Blinds (up / down with stop / slat)
Remote control:	Blinds (up / down with stop / slat)
Binary input:	
Mode 1:	Both channels: automatic sequence control (without slat only stop)
Mode 2:	Both channels: automatic sequence control (without slat only stop) ✓
Mode 3:	Channel A: automatic sequence control - see mode 1 Channel B: automatic sequence control - see mode 2
Mode 4:	Channel A: up and slat up or stop Channel B: down and slat down or stop
Room controller:	Shutters: too cold: open; too warm: close
Operating time:	60 s

Functions of the analogue actuator in the Basic Mode

0-10V OUT 1-10V OUT

RF Push-button:	ON / OFF and brighter / darker
Remote control:	ON / OFF and brighter / darker
Binary input:	
Mode 1:	Both channels with push-button and dimming function
Mode 2:	Both channels only ON / OFF without brighter / darker function
Mode 3:	Channel A: push-button and dimming function; Channel B: only ON / OFF without brighter / darker function
Mode 4:	Channel A: ON and brighter; Channel B: OFF and darker
Room controller:	Too cold: ON; too warm: OFF (without dimming)
Mains supply restored:	Last value
With low batterie:	Flashing
Dimming level:	0 to 100 % (CAAE-01/01 or CAAE-01/02) 1 to 100 % (CAAE-01/05)
Dimming time:	5 s
Characteristic:	linear
Relay:	switches as well
Information:	OFF: 0 VDC (CAAE-01/01) or 1 VDC (CAAE-01/02 and CAAE-01/05) ON: 10 VDC (CAAE-01/01, CAAE-01/02 and CAAE-01/05)

Programming Card "Basic Mode"

Devices overview

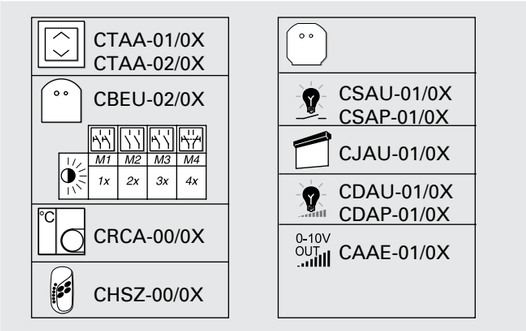

Assign functions

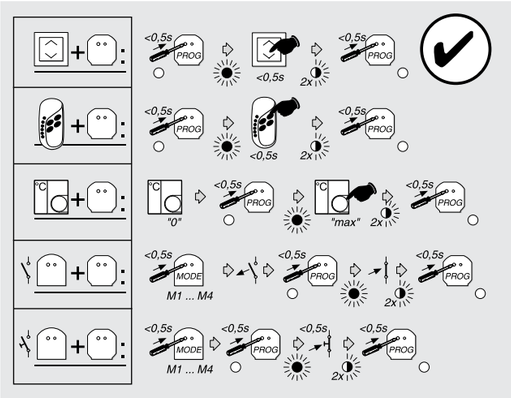

Delete individual sensors

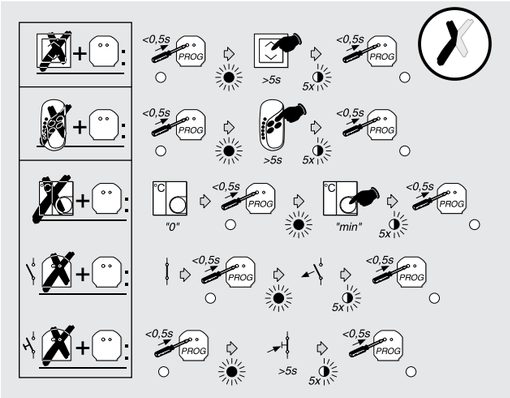

Totally delete an actuator

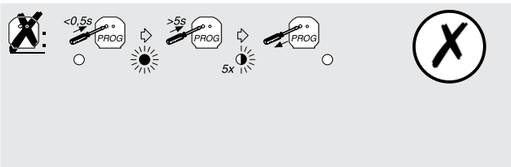

Manual operation

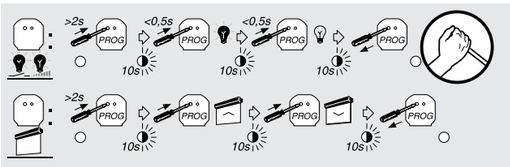

Programming Card "Basic Mode" CSAU-01/01-10IE:

Identify in MRF

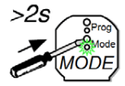

Highlight and find this Device in MRF

Change local input mode

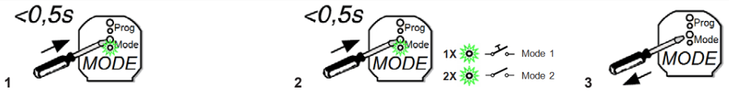

1 Start input selection mode

2 Select input mode by pressing multiple times

3 Input selection mode stops automatically after 10 seconds

Manual switching

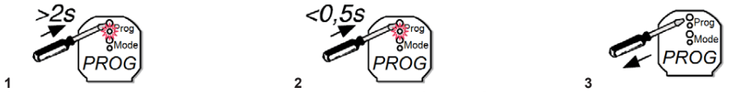

1 Start manual switching mode

2 Toggle between ON and OFF by pressing multiple time

3 Manual switching mode stops automatically after 10 seconds

Reset Actuator

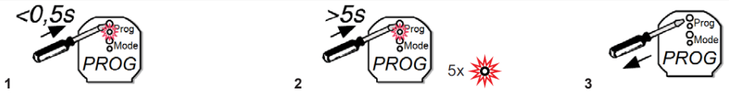

1 Start programming mode

2 Hold until the actor switches 5 times

3 Programming mode stops automatically

Assign a Sensor in Basic Mode

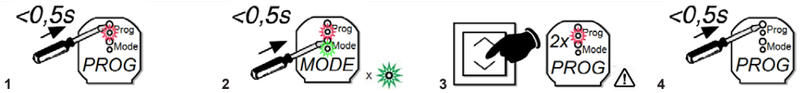

1 Start programming mode

2 Select Function Mode by pressing multiple times

3 Activate the sensor. The actor switches 2 times for verification

4 Stop programming Mode

x Function Mode			Sensor: CSAU-01/01-10I, CSAU-01/01-10IE
1x	/	ON/OFF	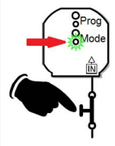 Assign Local Input: Mode LED must be On
2x	⇔	Toggle	
3x	⇨	Pushbutton	
4x	60s	Staircase	
5x	45s 3x 15s	Staircase with warning	

Remove a Sensor in Basic Mode

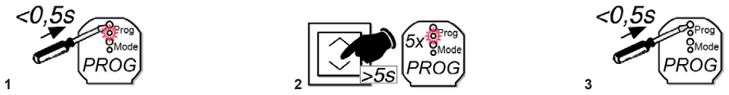

1 Start programming mode

2 Activate the sensor until the actor switches 5 times for verification

3 Stop programming Mode

Functions overview for actuators in the "Comfort Mode" (by means of MRF-Software and PC)

For each sensor assigned (max. 15 sensors per actuator) the following different functions can be selected:

Switching actuator functions that can be selected in the Comfort Mode

Functions available:

ON / OFF (Standard in the Basic Mode)
Switches ON or OFF
ON / Switch-on delay time
Switch-on command which is carried out either immediately or after an adjustable delay time
OFF / Switch-off delay time
Switch-off command which is carried out either immediately or after an adjustable delay time
OFF with advance warning
Staircase light function that switches ON immediately and switches OFF after an adjustable delay time. 15 seconds before the switching actuator switches OFF, the output unit will flash once as an advance warning.
Push-button function
The switching actuator switches ON only for the time the push-button is pressed; once it is released, il will switch OFF
Power impulse
The switching actuator changes its initial state every time it is activated
Flashing
Upon activation, the switching actuator starts flashing after an adjustable interval time
No function
As indicated

Other settings:

Delay time depending on each function: 0 seconds to 18 hours
Interval time of flash: 2 seconds to 18 hours
Command time for a long push at the button: 1 to 5 seconds
Identification of the battery status (flashes upon switch-on)
Behaviour of the output unit when the power supply is restored

CSAU-01/01-10IE Switching actuator functions that can be selected in the Comfort Mode

Functions available:

ON / OFF (Standard), occupies 2 command buttons
Switches ON or OFF
ON / Switch-on delay time, occupies 1 command button
On Command which is executed immediately or after an adjustable delay time (1 second to 18 hours)
OFF / ON with Switch-Off delay, occupies 1 command button
Off Command which is executed immediately or after an adjustable delay time (1 second to 18 hours). In case of a delay time >0 s the output will switch ON immediately and switch OFF after the delay time.
OFF / Switch-off delay time, occupies 1 command button
Off Command which is executed immediately or after an adjustable delay time (1 second to 18 hours). Does not switch ON if the output is already OFF.
OFF with Advance Warning, occupies 1 command button
Staircase function which switches ON immediately and switches OFF after an adjustable time (20 seconds to 18 hours) . The Switching Actuators Output is blinking 15 seconds before it switches OFF.
Push-button function, occupies 2 command buttons
The switching actuator switches ON only for the time the push-button is pressed; once it is released, it will switch OFF.
Power impulse, occupies 1 command button
The switching actuator changes its initial state every time it is activated
Flashing, occupies 1 command button
Upon activation, the switching actuator starts flashing after an adjustable interval time. You can adjust the interval time and the ON/OFF duty cycle (1 to 99 % - minimum value cannot be <0.5 s).
Activate Lock, occupies 1 command button
Locks the actuator against any further operation of other sensors with normal functions, the lock can be permanently (can only be released by a sensor with „Release Lock" function) or after a defined lock time (10 minutes to 18 hours), the output action for Lock and Release Lock can be defined (ON, OFF, old value)
Release Lock, occupies 1 command button
Releases the Lock and allows operation of the actuator by normal functions again, the output action for Release Lock can be defined (ON, OFF, old value)
No function, occupies 1 command button
Has no function. However, if several stations are assigned to this sensor channel, a resend of the command is triggered.

Dimming actuator functions that can be selected in the Comfort Mode

Functions available:

ON / OFF / Dimming (Standard in the Basic Mode)
Switches ON, OFF or DIMS
ON / Switch-on delay time
Switch-on command which is carried out either immediately or after an adjustable delay time
OFF / Switch-off delay time
Switch-off command which is carried out either immediately or after an adjustable delay time
OFF with advance warning
Staircase light function that switches ON immediately and switches OFF after an adjustable delay time. 15 seconds before the switching actuator switches OFF, the output unit will flash once as an advance warning.
Dimming function through push-button
The dimmer switches ON or OFF upon a short push at the button and will dim UP or DOWN upon a long push at the button
Power impulse
The dimming actuator changes its initial state every time it is activated
Flashing, takes the dimming time into account
Upon activation, the dimming actuator starts flashing after an adjustable interval time while dimming at the same time
Brightness desired
The dimming actuator dims at the preset dimming speed (dimming time) towards a brightness value that has been preset
No function
As indicated

Other settings:

Delay time depending on each function: 0 seconds to 18 hours
Interval time of flash: 2 seconds to 18 hours
Command time for a long push at the button: 1 to 5 seconds
Dimming time: 0 to 250 seconds
Dimming level: 0 to 100 %
Identification of the battery status (flashes upon switch-on)
Behaviour of the output unit when the power supply is restored

Shutters/blinds actuator functions that can be selected in the Comfort Mode

Functions available:

Blinds (Standard in the Basic Mode)
Slat Up / Down or Stop and Open/Close for the time of the preset operation time
Shutters
Stop and Open/Close for the time of the preset operation time
Shutters with Open function
Stop and Open/Close (with short opening) for the time of the preset operation time
Open
Open for the time of the preset operation time
Close
Close for the time of the preset operation time
Stop
Stop command
Sequence control
Changes upon each command in the following order: Open - Stop - Close - Stop - Open …
Security upon switching ON (with CJAU-01/02)
Moves to the security position upon an ON command
Security upon switching OFF (with CJAU-01/02)
Moves to the security position upon an OFF command
Acknowledgement of security position
Acknowledges a current security position
No function
As indicated

Other settings:

Operation time of the blinds/shutters: 1 second to 1 hour (0 seconds and push-button operation with CJAU-01/02 only)
Command time for a long push at the button: 1 to 5 seconds
Security position: Top/bottom/stop (with CJAU-01/02)
Cycle time of security: 10 minutes to 18 hours (cyclical reception switched off with CJAU-01/02 only)

Analogue actuator functions that can be selected in the Comfort Mode

0-10V OUT 1-10V OUT

Functions available:

ON / OFF / Dimming (Standard in the Basic Mode)
Switches ON, OFF or DIMS

ON / Switch-on delay time
Switch-on command which is carried out either immediately or after an adjustable delay time

OFF / Switch-off delay time
Switch-off command which is carried out either immediately or after an adjustable delay time

OFF with advance warning
Staircase light function that switches ON immediately and switches OFF after an adjustable delay time. 15 seconds before the dimming actuator switches OFF, the output unit will flash once as an advance warning.

Dimming function through push-button
The analogue actuator switches ON or OFF upon a short push at the button and dims up or down upon a long push at the button

Power impulse
The analogue actuator changes its initial state every time it is activated, while dimming at the same time

Flashing, takes the dimming time into account
Upon activation, the analogue actuator starts flashing after an adjustable interval time while dimming at the same time

Analogue value desired
The analogue actuator dims at the preset dimming speed (dimming time) towards a preset analogue value

No function
As indicated

Other settings:

Delay time depending on each function: 0 seconds to 18 hours
Interval time of flash: 2 seconds to 18 hours
Command time for a long push at the button: 1 to 5 seconds
Dimming time: 0 to 250 seconds
Dimming level: 0 to 100 % (CAAE-01/01 or CAAE-01/02)
1 to 100 % (CAAE-01/05)
Characteristic: Linear, logarithmical
Relais switches as well: YES/NO
Identification of the battery status (flashes upon switch-on)
Behaviour of the output unit when the power supply is restored

Information: OFF: 0 VDC (CAAE-01/01) or 1 VDC (CAAE-01/02 and CAAE-01/05)
ON: 10 VDC (CAAE-01/01, CAAE-01/02 and CAAE-01/05)

Notes

Eaton is an intelligent power management company dedicated to improving the quality of life and protecting the environment for people everywhere. Where we guided by our commitment to do business right, to operate sustainably and to help our customers manage power today and well into the future. By capitalizing on the global growth trends of electrification and digitalization, we're accelerating the planet's transition to renewable energy, helping to solve the world's most urgent power management challenges, and doing what's best for our stakeholders and all of society.

For more information, visit **www.eaton.com**.

To contact us please visit **https://www.eaton.com/contacts**

For technical questions please contact your local Eaton team.

Eaton Industries (Austria) GmbH
Scheydgasse 42
1210 Vienna, Austria

Eaton
EMEA Headquarters
Route de la Longeraie 7
1110 Morges, Switzerland
Eaton.eu

The products, information and prices contained in this document are subject to change. The same is true for any errors or omissions. Only the order confirmation and the technical documentation received from Eaton are binding. Photos and illustrations are indicative only and do not serve as proof of any appearance or functionality. Their use in any form must be approved in advance by Eaton. The same applies for brand names (in particular Eaton, Moeller, Cutler-Hammer, Cooper and Bussmann). Eaton's terms of sale, as published on Eaton's websites and included with order confirmations received from Eaton, apply

© 2023 Eaton
All Rights Reserved
Publication No. CA004001EN
October 2024

Eaton is a registered trademark.

All other trademarks are property of their respective owners.

Follow us on social media to get the latest product and support information.

Powering Business Worldwide

9 010653 053712