SMART OUTDOOR CAMERA

Installation manual

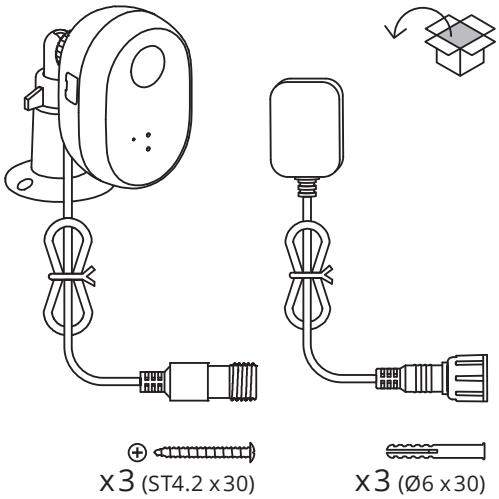

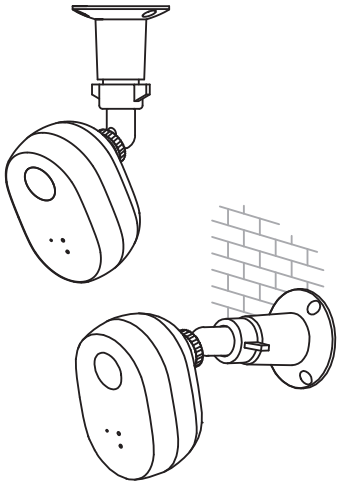

Excluded

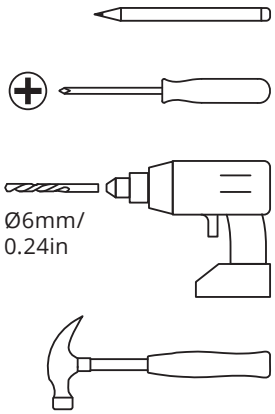

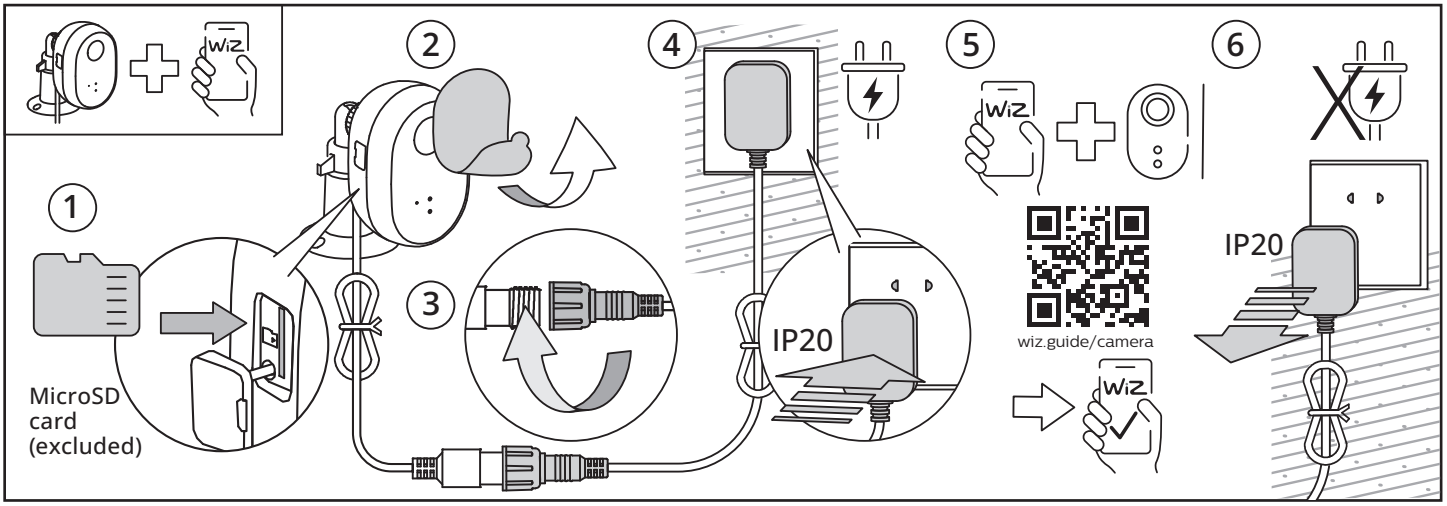

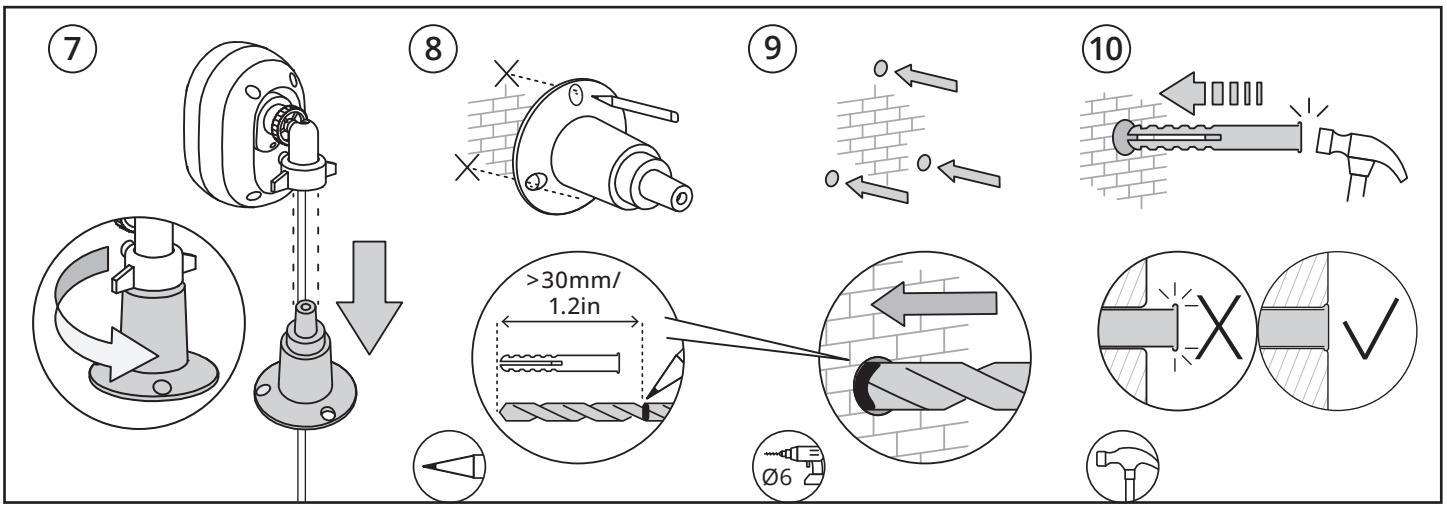

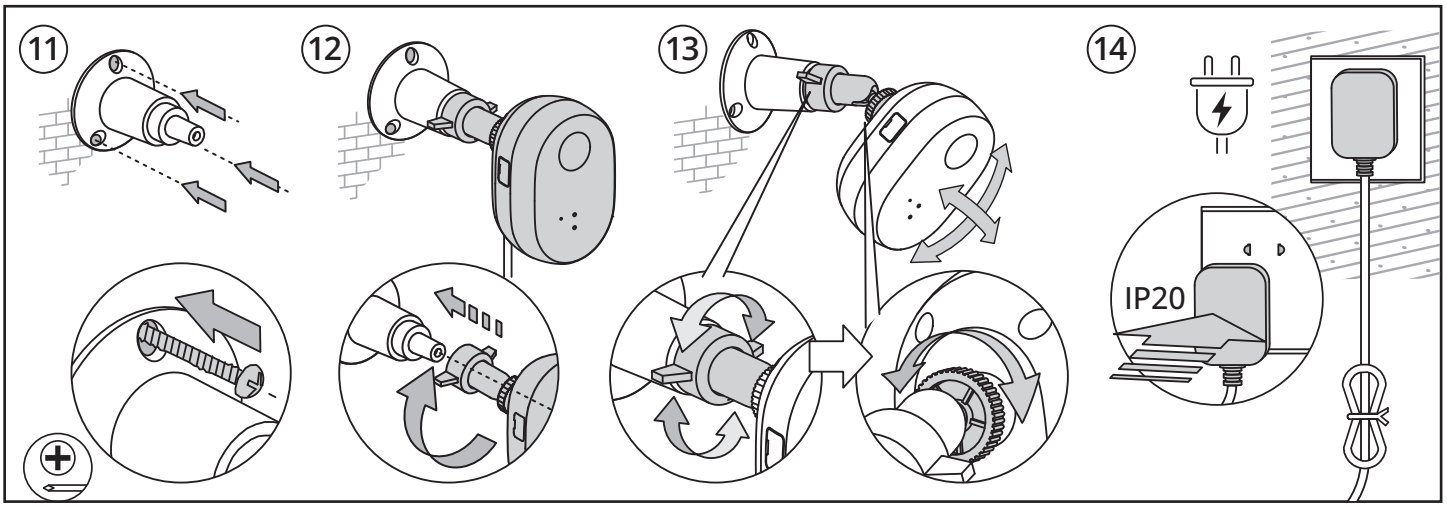

3241 661 51711
©2024 Signify Holding
signify