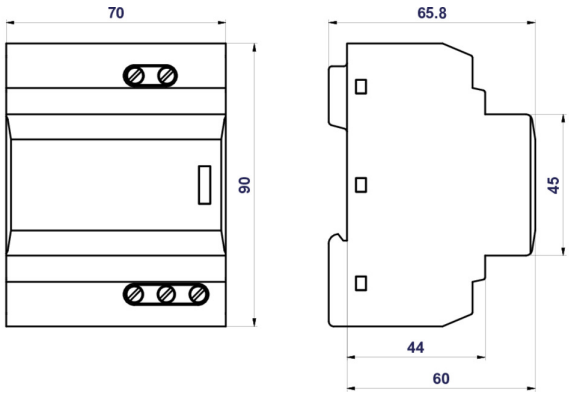

HSAF32

- Two-stage surge arresters type T3 with high-frequency filters for serial connection.
- Intended for protection of electronic appliances against the effects of switching, induced and residual overvoltage generated in LV power supply systems.
- Contain an improved thermal fuse, which ensures timely disconnection of HSAF* S from the power grid during the MOV's overheating and thus prevents damage to the HSAF* S.
- Installed at the boundaries of LPZ 2 - LPZ 3, as close to the device to be protected as possible (no further than 5 m).
- In front of HSAF* S must be installed a lightning current and surge arrester T1 and T2 from HAKEL company.
- **S** indication specifies a version with remote monitoring.

Type		HSAF32
Test class according to EN 61643-11:2012 (IEC 61643-11:2011)		T3
System		TN-C-S, TN-S
Number of poles		2
Rated operating AC voltage	U_N	230 V
Maximum continuous operating voltage AC	U_C	275 V
Rated load current	I_L	32 A
Open circuit voltage of the combination wave generator (L/N, L/PE)	U_{OC}	6 kV
Open circuit voltage of the combination wave generator (N/PE)	U_{OC}	10 kV
Voltage protection level at U_{OC} (L/N)	U_p	< 0.8 kV
Voltage protection level at U_{OC} (L/PE)	U_p	< 1.5 kV
Voltage protection level at U_{OC} (N/PE)	U_p	< 1.2 kV
Nominal discharge current for class II test (8/20) L/N, L/PE	I_n	3 kA
Nominal discharge current for class II test (8/20) N/PE	I_n	5 kA
Total discharge current (8/20) L+N->PE	I_{Total}	6 kA
Asymmetrical attenuation of filter at f = 4 MHz		> 80 dB
Asymmetrical attenuation of filter at f = 0,15 ÷ 30 MHz		> 40 dB
Temporary overvoltage test value (TOV) for t_T = 5 s (L/N)	U_T	337 V
Temporary overvoltage test value (TOV) for t_T = 0,2 s (N/PE)	U_T	1 200 V
Response time (L/N)	t_A	< 25 ns
Response time (L/PE, N/PE)	t_A	< 100 ns
Power dissipation at 20 °C	Pz	< 4 W
Maximal back-up fuse		32 A gL/gG
Lightning protection zone		LPZ2, LPZ3
Housing material		Polyamid PA6, UL94 V-0
Degree of protection		IP20
Operating temperature	ϑ	-40 ÷ 55 °C
Recommended cross-section of connected conductors	S	6 mm^2
Clamp fastening range (solid conductor)		2.5 ÷ 16 mm^2
Clamp fastening range (stranded conductor)		2.5 ÷ 10 mm^2

HAKEL spol. s r.o. | Bratří Štefanů 980, 500 03 Hradec Králové, Czech Republic
Telefon: +420 494 942 314 | e-mail: info@hakel.com | www.hakel.com

Type		HSAF32
Tightening moment		1,2 Nm
Installation		On DIN rail 35 mm
Modular width		4 TE
Operating position		Any
Signalling at the device		Optic
Importance of local signaling		OK – red light off FAULT – red light on
Remote signalling		No
Includes EMI / EMC filter		Yes
Modular design		No
Lifetime		> 100 000 h
Designed according to standards		
Requirements and test methods for SPDs connected to low-voltage power systems		IEC 61643-11:2011
Methods of measurement of the suppression characteristics of passive EMC filtering devices		EN 55017:2011 / CISPR 17:2011
Safety of Flammability of Plastic Materials		UL 94
Application standards		
Protection against lightning		IEC 62305:2010
Selection and erection of electrical equipment – Devices for protection against transient overvoltages		HD 60364-5-534:2016
Selection and application principles for SPDs connected to low-voltage power systems		IEC 61643-12:2008
Ordering, packaging and additional data		
Mass	m	235 g
Mass (including the packaging)	m	263 g
Packaging dimensions (H x W x D)		112 x 74 x 73 mm
Packaging value	V	0.61 dm^3
ETIM group		EG000021
ETIM class		EC000942
Customs tariff no.		85363030
EAN code		8590681167274
Art. number		**30 198**

HAKEL spol. s r.o. | Bratří Štefanů 980, 500 03 Hradec Králové, Czech Republic
Telefon: +420 494 942 314 | e-mail: info@hakel.com | www.hakel.com

Internal diagram

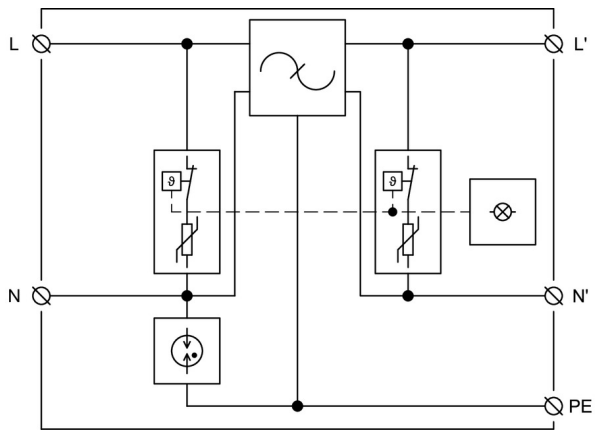

Application wiring diagram (installation)

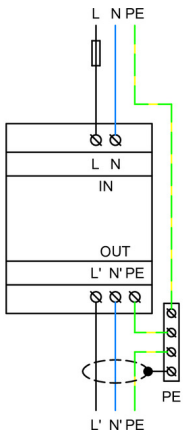

HAKEL spol. s r.o. | Bratří Štefanů 980, 500 03 Hradec Králové, Czech Republic
Telefon: +420 494 942 314 | e-mail: info@hakel.com | www.hakel.com